Maxima Z LPG & Petrol

Spare Parts Catalogue

Maxima Z LPG & Petrol



Bajaj Auto Limited
Akurdi Pune 411 035 India
www.bajajauto.com

All information contained in this manual is based on the latest product information at the time of publication. Bajaj Auto Limited accepts no liability for any inaccuracies or omissions in this publication, although every possible care has been taken to make it as complete and accurate as possible. All procedures and specifications subject to change without prior notice. The right is reserved to make such changes at any time without prior notice and without incurring an obligation to make such changes to product manufactured previously. Contact your authorized Bajaj Dealer for the latest information on product improvements incorporated after this manual was issued.

REV. JUN. 2022

Maxima Z LPG & Petrol

We have pleasure in presenting the Spare Parts Catalogue for **'BAJAJ Maxima Z Facelift UG LPG & Petrol'** Vehicles. This catalogue has been specially designed to assist you in selecting the correct parts to maintain your vehicle in best running condition.

The Bajaj spares are subjected to the stringent quality control standards to ensure longer life of the vehicle. It is therefore necessary that only the Genuine Bajaj Spares are used.

In a continual effort to improve performance & efficiency of the vehicle, Specifications, Diagrams, Illustrations and Part Numbers can change without notice. Consequently, the description in this Spare Parts Catalogue cannot therefore be final and binding on us.

The modifications / alterations which are carried out after the issue of this catalogue, will be conveyed to you through our service circulars. You are requested to make necessary corrections in the parts catalogues as per the circulars so as to keep your catalogues up to date. This will ensure the appropriate and speedy delivery of the spare parts as the order placed will bear the latest part numbers.

For latest information of serviceable spares, refer catalogue on dealer portal.

In case, if you need any technical assistance contact the concerned Regional Office or write to us on the following address :

Bajaj Auto Ltd.
Spares - International Business
Akurdi, Pune 411 035 India

Instructions for using the Catalogue

Maxima Z LPG & Petrol

1. How to Read the Catalogue : Open the catalogue and from the pictorial index locate the group in which the part you want to find is present. Turn over to the concerned page number (as given by pictorial index). Now find out the figure of the part you wish to order. Write down the part number against that particular figure number from the text.

   In case, if you have the part number and you need the other details, the part index can be used. The part index (at the end of the catalogue) will give you the figure and page number of the part you wish to order.

2. How to Order Spare Parts : The part number and the description of the part required should be invariably mentioned in the order as per the catalogue text.

   The latest part number as conveyed through our service circulars should only appear on the order. In case of ordering painted components, colour shade of the components should be mentioned.

   The quantity shown against the part number is the quantity per vehicle for that group so that particular quantity should be multiplied by the number of sets required.

3. Part Number System: We have used 8 digit system for part numbers. The model or hardware item is indicated by first two digits or alphanumeric, the next two or four digits indicate main group and the last four or two digits indicate serial number in main group or serial number or subgroup of fastener respectively. Thus the part numbers will be indicated by 2-2-4 or 2-4-2 digit system. Understanding this system will enable you to identify the spare parts easily.

4. Abbreviations : The following abbreviations are used in this catalogue.

R	Relaunch	O	Old
comp.	complete	NS	Not serviceable
Assly.	Assembly	N.I.	Not illustrated
Fr	Front	Alt.	Alternate
R.H.	Right hand	L.H.	Left hand

INDEX

Maxima Z LPG & Petrol

Sr.No.	Description	Page No.
1	Engine Assembly	1
2	Crankcase Clutch Side	2
3	Crankcase Magneto Side	3,4
4	Clutch Cover	5,6,7
5	Differential Cover	8,9
6	Cylinder / Piston Assembly	10
7	Cylinder Head	11,12
8	Rocker ARM Assembly & Valve	13
9	Camshaft & Chain Tensioner	14
10	Crankshaft Assembly	15
11	Main Shaft	16
12	Gear Transmission	17
13	Differential Assembly	18
14	Oil Pump Assembly	19
15	Clutch Assembly	20
16	Fare Meter Drive Unit	21
17	Gear Shifter Assembly	22
18	Starter Motor Assembly	23,24
19	Magneto Assembly & H.T Coil	25
20	Silencer Assembly	26,27
21	Engine Mounting	28,29
22	Carburettor	30,31
23	Air Filter Assembly	32,33
24	Pipe Air Intake	34,35
25	Fuel Tank - LPG	36
26	Fuel Tank - Petrol	37,38,39
27	SAI Unit Assembly	40
28	Oil Cooler Assembly	41,42
29	CV Shaft	43
30	Trailing Arm / RR SH. ABS	44
31	Rear Hub & Axle	45
32	FR Shock Absorber & Linkage	46
33	Steering Column Assembly	47
34	Front Brake Drum	48
35	Auto Adjuster Brake System	49,50
36	Front Mudguard	51
37	Brake Pipe	52
38	Tandem Master Cylinder	53
39	Brake Pedal Assembly	54
40	Hand Brake	55
41	Reverse Brake Assembly	56
42	Battery	57
43	Handle Bar	58,59
44	Control Cables	60
45	Frame Chassis	61
46	Spare Wheel Assembly	62
47	Harness Wiring	63
48	Dashboard	64,65,66
49	Windshield & Wiper Motor	67,68
50	Steering & Head Lamp Cover	69

Sr.No.	Description	Page No.
51	Passenger Body Assembly	70,71,72
52	Doors Assembly	73,74
53	Seat Assembly	75,76,77
54	Hood Frame Assembly	78
55	Head Light Assembly & Blinkers	79,80
56	Tail Lamp Assembly	81
57	Switches & Horn	82
58	Electrical Units	83,84
59	Cylinder For LPG Vehicles	85,86
60	Filler Connector Unit	87
61	Regulator Assembly	88,89
62	Multi Valve (Zero Deg)	90
	Kit List	91 To 94
	Amendment Sheet	95 To 96
	Part Index	97 To 114

PLATE NO. : 1 ENGINE ASSEMBLY	PAGE NO.: 1

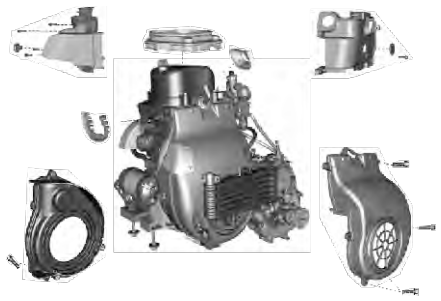

PLATE NO. : 2 CRANKCASE CLUTCH SIDE	PAGE NO.: 2

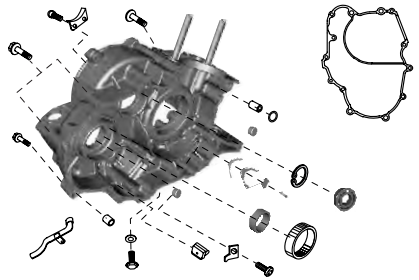

PLATE NO. : 3 CRANKCASE MAGNETO SIDE	PAGE NO.: 3,4

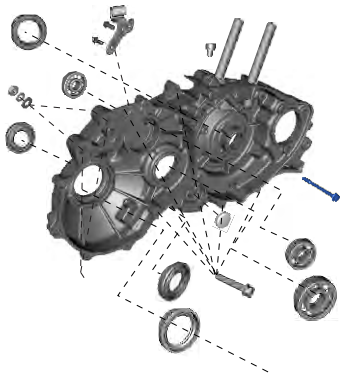

PLATE NO. : 4 CLUTCH COVER	PAGE NO.: 5,6,7

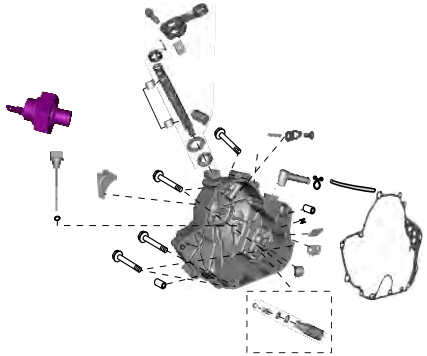

PLATE NO. : 5 DIFFERENTIAL COVER	PAGE NO.: 8,9

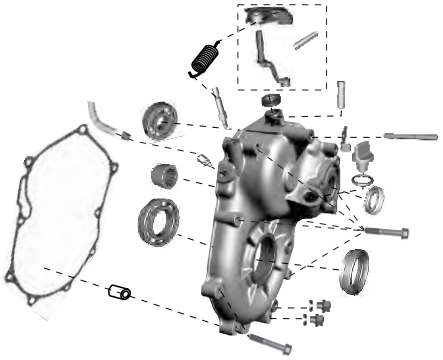

PLATE NO. : 6 CYLINDER / PISTON ASSEMBLY	PAGE NO.: 10

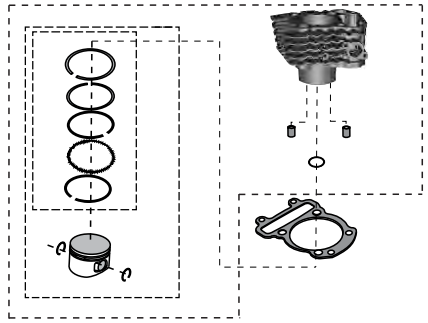

PLATE NO. : 7 CYLINDER HEAD	PAGE NO.: 11,12

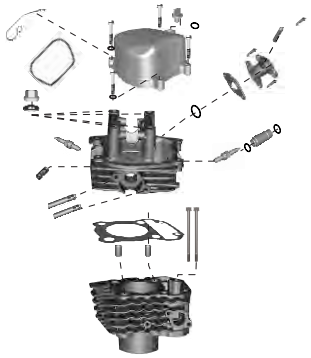

PLATE NO. : 8 ROCKER ARM ASSEMBLY & VALVE	PAGE NO.: 13

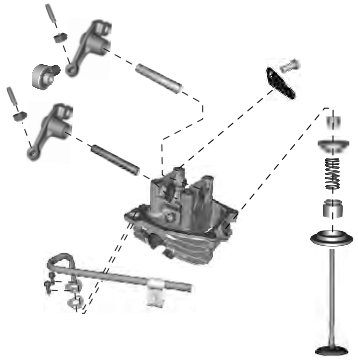

PLATE NO. : 9 CAMSHAFT & CHAIN TENSIONER	PAGE NO.: 14

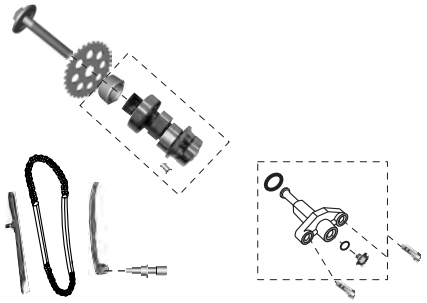

PLATE NO. : 10 CRANKSHAFT ASSEMBLY	PAGE NO.: 15

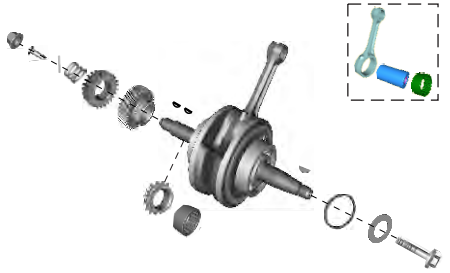

PLATE NO. : 11 MAIN SHAFT	PAGE NO.: 16

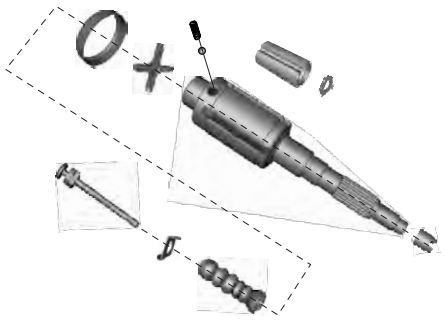

PLATE NO. : 12 GEAR TRANSMISSION	PAGE NO.: 17

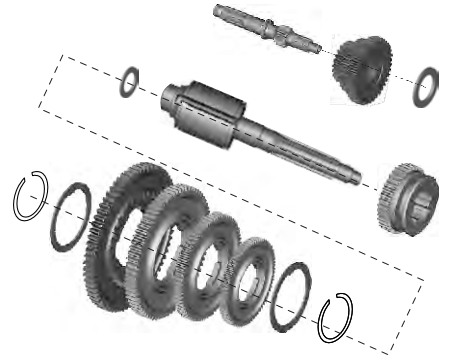

Pictorial Index

Maxima Z LPG & Petrol

PLATE NO. : 13 DIFFERENTIAL ASSEMBLY	PAGE NO.: 18

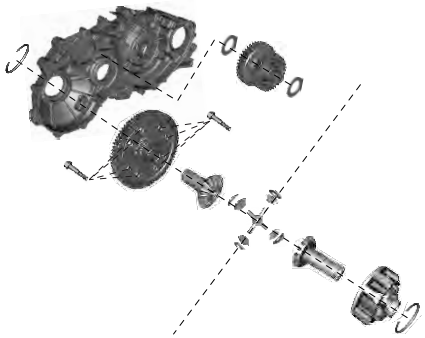

PLATE NO. : 14 OIL PUMP ASSEMBLY	PAGE NO.: 19

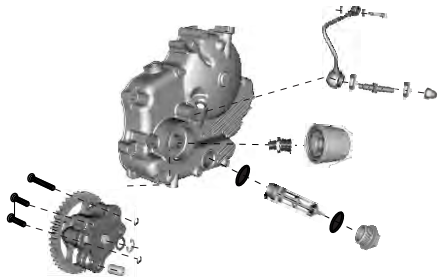

PLATE NO. : 15 CLUTCH ASSEMBLY	PAGE NO.: 20

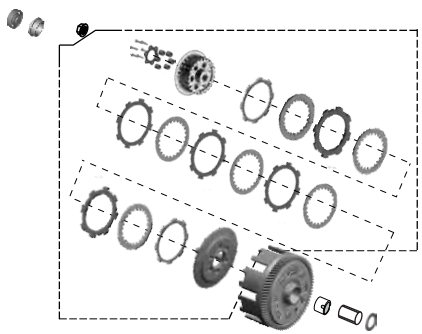

PLATE NO. : 16 FARE METER DRIVE UNIT	PAGE NO.: 21

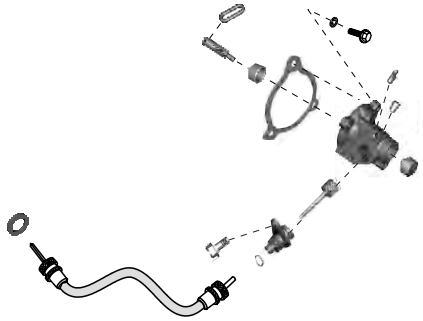

PLATE NO. : 17 GEAR SHIFTER ASSEMBLY	PAGE NO.: 22

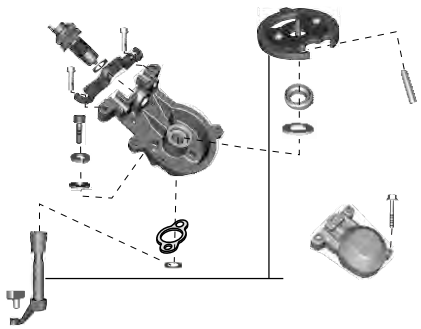

PLATE NO. : 18 STARTER MOTOR ASSLY	PAGE NO.: 23,24

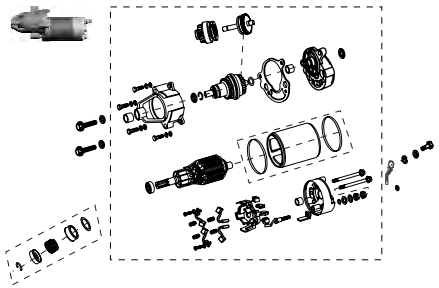

Pictorial Index

Maxima Z LPG & Petrol

PLATE NO. : 19 MAGNETO ASSEMBLY & H.T. COIL	PAGE NO.: 25

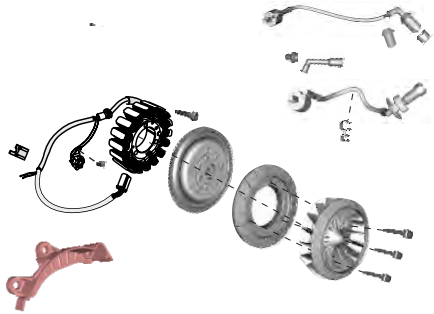

PLATE NO. : 20 SILENCER ASSEMBLY	PAGE NO.: 26,27

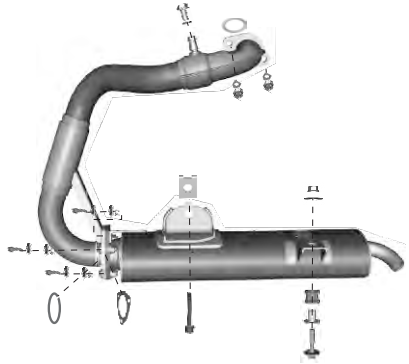

PLATE NO. : 21 ENGINE MOUNTING	PAGE NO.: 28,29

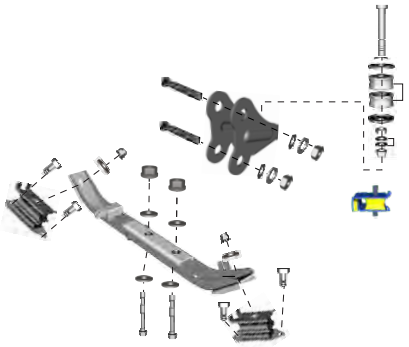

PLATE NO. : 22 CARBURETTOR	PAGE NO.: 30,31

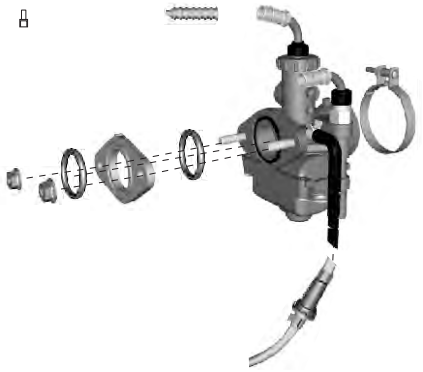

PLATE NO. : 23 AIR FILTER ASSEMBLY	PAGE NO.: 32,33

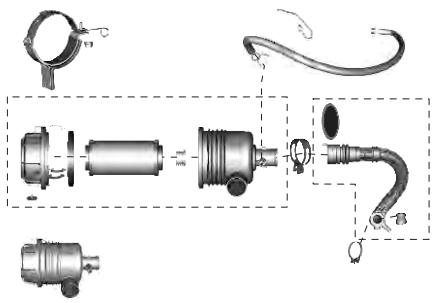

PLATE NO. : 24 PIPE AIR INTAKE	PAGE NO.: 34,35

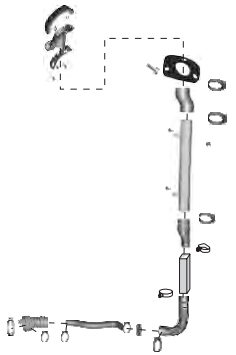

PLATE NO. : 25 PETROL TANK - LPG	PAGE NO.: 36

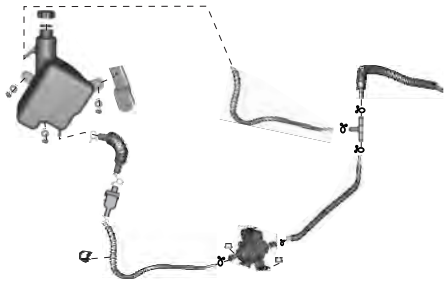

PLATE NO. : 26 FUEL TANK - PETROL	PAGE NO.: 38,39

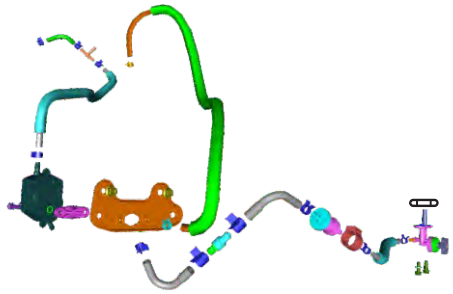

PLATE NO. : 28 OIL COOLER ASSEMBLY	PAGE NO.: 41,42

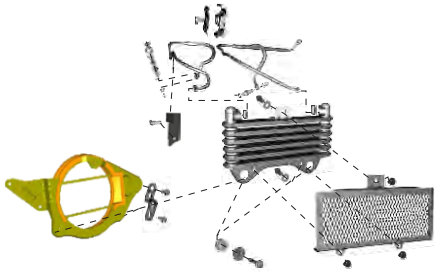

PLATE NO. : 26 FUEL TANK - PETROL	PAGE NO.: 37

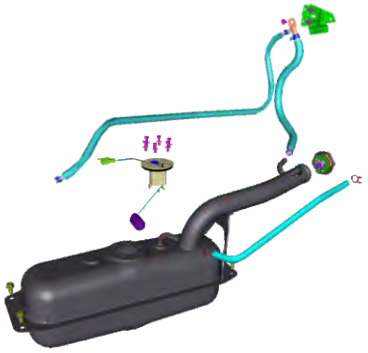

PLATE NO. : 27 SAI UNIT ASSEMBLY	PAGE NO.: 40

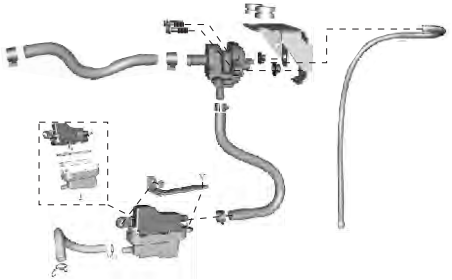

PLATE NO. : 29 CV SHAFT	PAGE NO.: 43

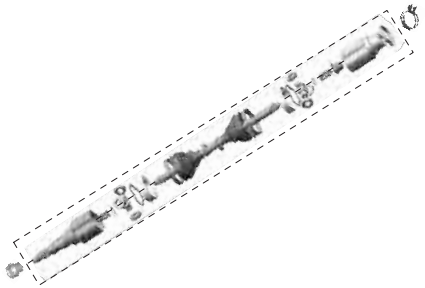

Pictorial Index

Maxima Z LPG & Petrol

PLATE NO. : 30 TRAILING ARM/ RR SH. ABS	PAGE NO.: 44

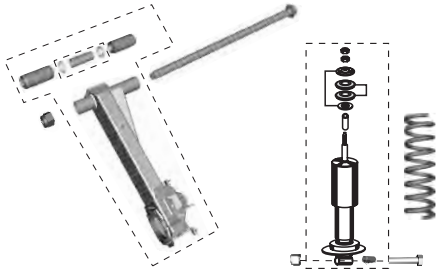

PLATE NO. : 32 FRONT SHOCK ABSORBER & LINKAGE	PAGE NO.: 46

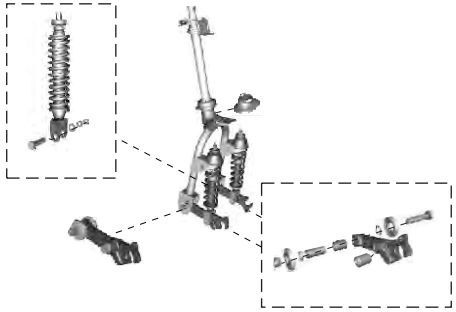

PLATE NO. : 34 FRONT BRAKE DRUM	PAGE NO.: 48



PLATE NO. : 31 REAR HUB & AXLE	PAGE NO.: 45

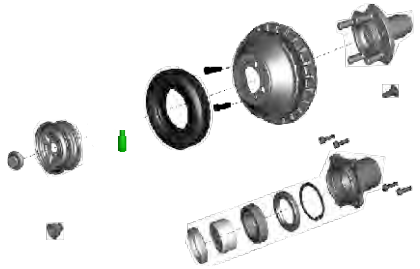

PLATE NO. : 33 STEERING COLUMN ASSEMBLY	PAGE NO.: 47

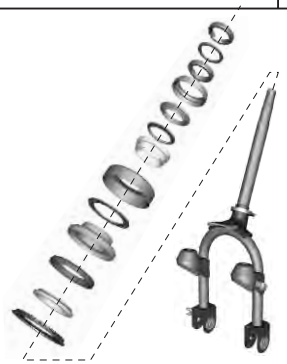

PLATE NO. : 35 AUTO ADJUSTER BRAKE SYSTEM	PAGE NO.: 49,50

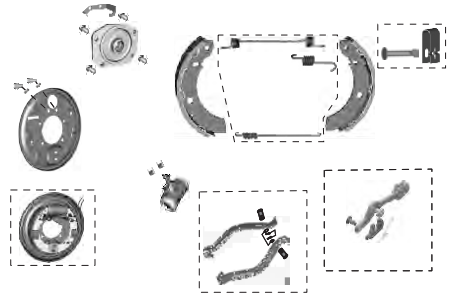

PLATE NO. : 36 FRONT MUDGUARD	PAGE NO.: 51

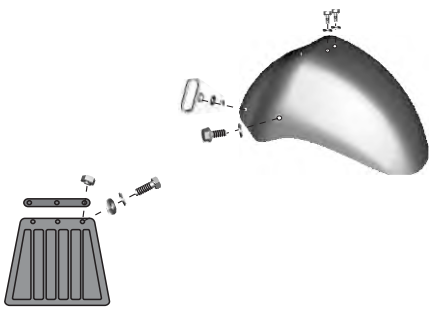

PLATE NO. : 37 BRAKE PIPE	PAGE NO.: 52

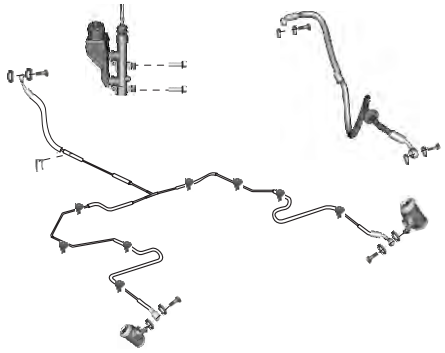

PLATE NO. : 38 TANDEM MASTER CYLINDER	PAGE NO.: 53

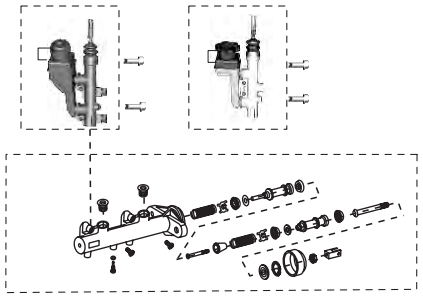

PLATE NO. : 39 BRAKE PEDAL ASSEMBLY	PAGE NO.: 54

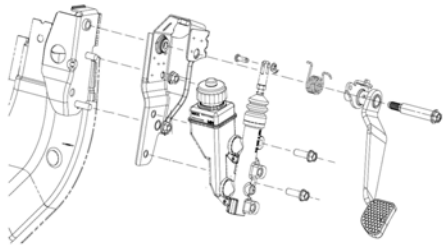

PLATE NO. : 40 HAND BRAKE	PAGE NO.: 55

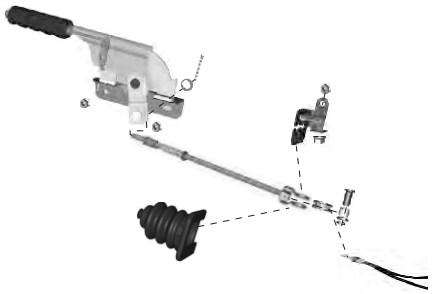

PLATE NO. : 41 REVERSE BRAKE ASSEMBLY	PAGE NO.: 56

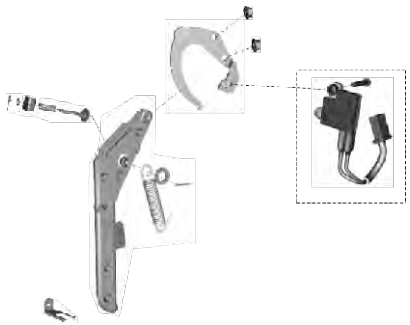

Pictorial Index

Maxima Z LPG & Petrol

PLATE NO. : 42 BATTERY	PAGE NO.: 57

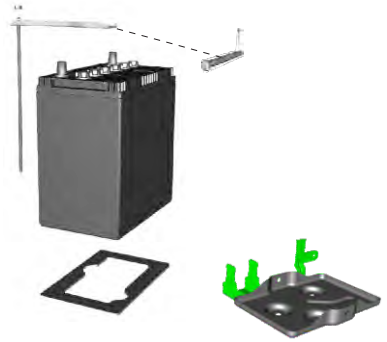

PLATE NO. : 43 HANDLE BAR	PAGE NO.: 58,59

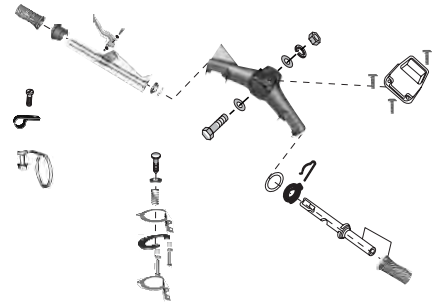

PLATE NO. : 44 CONTROL CABLES	PAGE NO.: 60

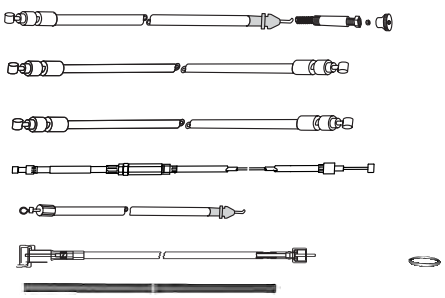

PLATE NO. : 45 FRAME CHASSIS	PAGE NO.: 61

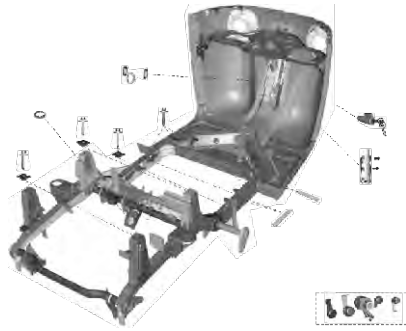

PLATE NO. : 46 SPARE WHEEL ASSEMBLY	PAGE NO.: 62

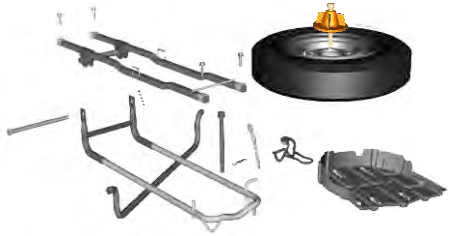

PLATE NO. : 47 HARNESS WIRING	PAGE NO.: 63

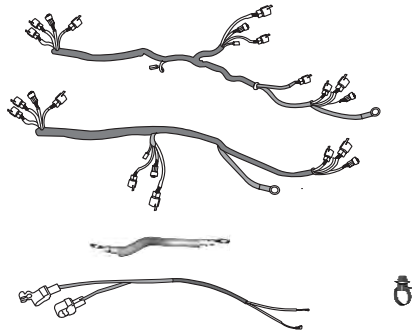

PLATE NO. : 48 DASHBOARD	PAGE NO.: 64,65,66

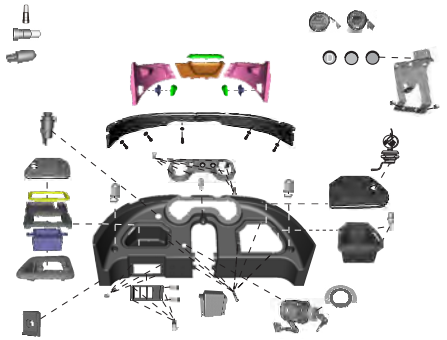

PLATE NO. : 49 WINDSHIELD & WIPER MOTOR	PAGE NO.: 67,68

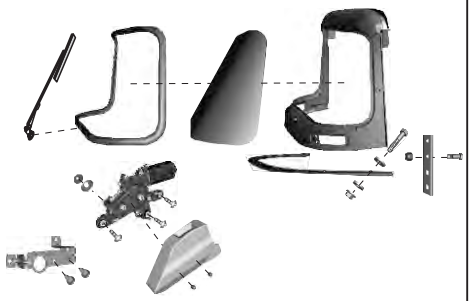

PLATE NO. : 50 STEERING & HEAD LAMP COVER	PAGE NO.: 69

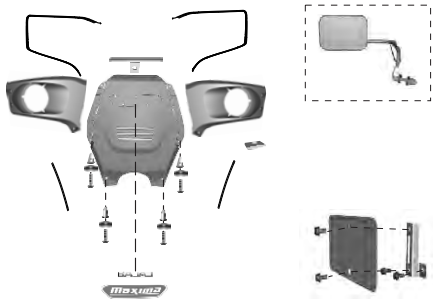

PLATE NO. : 51 PASSENGER BODY ASSEMBLY	PAGE NO.: 70,71,72

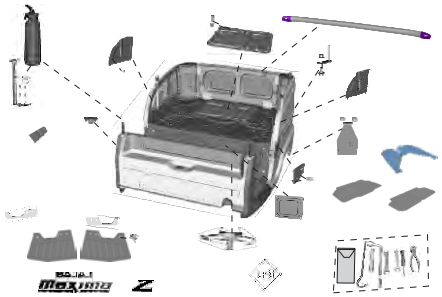

PLATE NO. : 52 DOORS ASSEMBLY	PAGE NO.: 73,74

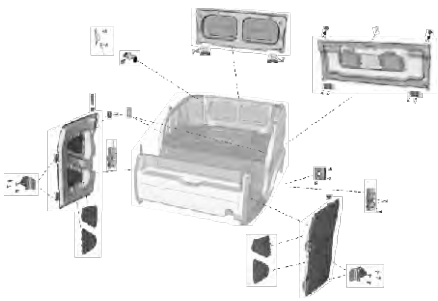

PLATE NO. : 53 SEAT ASSEMBLY	PAGE NO.: 75,76,77

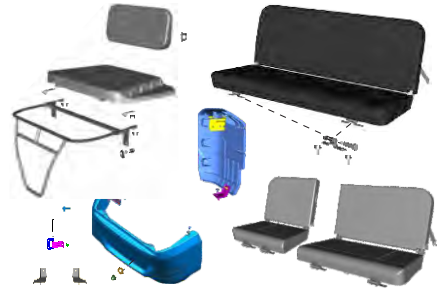

Pictorial Index

Maxima Z LPG & Petrol

PLATE NO. : 54 HOOD FRAME ASSEMBLY	PAGE NO.: 78

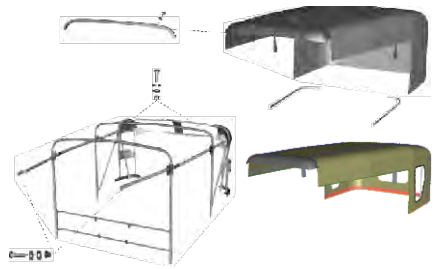

PLATE NO. : 55 HEAD LIGHT ASSLY & BLINKERS	PAGE NO.: 79,80

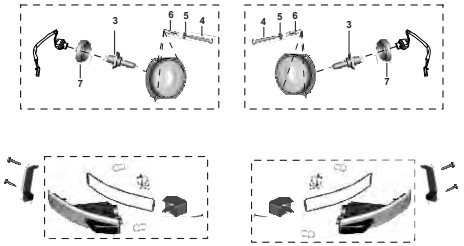

PLATE NO. : 56 TAIL LAMP ASSEMBLY	PAGE NO.: 81

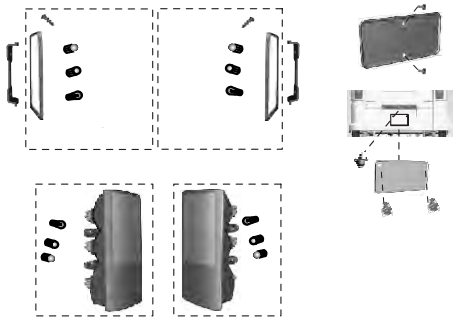

PLATE NO. : 57 SWITCHES & HORN	PAGE NO.: 82



PLATE NO. : 58 ELECTRICAL UNITS	PAGE NO.: 83,84

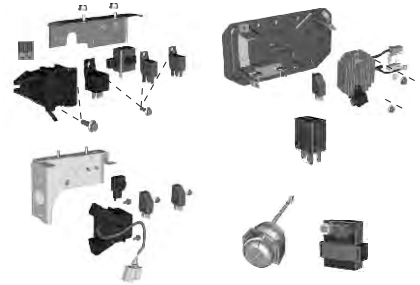

PLATE NO. : 59 CYLINDER FOR LPG VEHICLES	PAGE NO.: 85,86

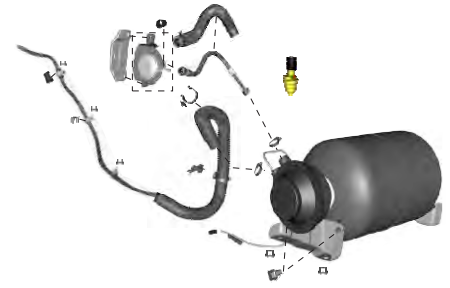

PLATE NO. : 60 FILLER CONNECTOR UNIT	PAGE NO.: 87

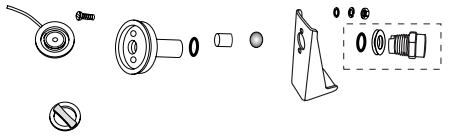

PLATE NO. : 61 REGULATOR ASSEMBLY	PAGE NO.: 88,89

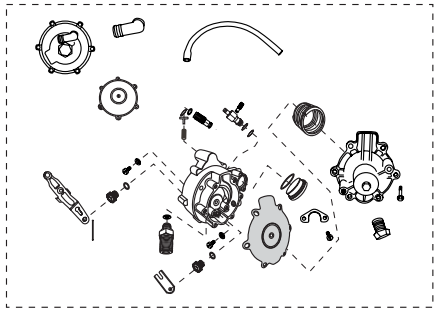

PLATE NO. : 62 MULTI VALVE (ZERO DEG)	PAGE NO.: 90

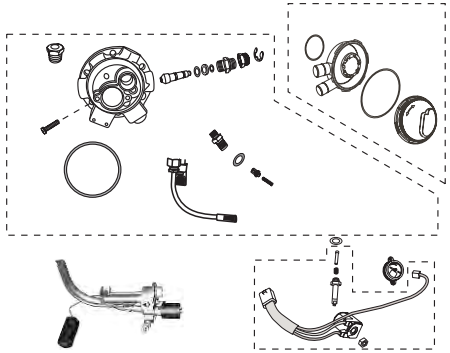

PLATE NO. :	PAGE NO.:

PLATE NO. :	PAGE NO.:

PLATE NO. :	PAGE NO.:

PLATE NO. :	PAGE NO.:

Pictorial Index

Maxima Z LPG & Petrol

PLATE NO. :	PAGE NO.:

PLATE NO. :	PAGE NO.:

PLATE NO. :	PAGE NO.:

PLATE NO. :	PAGE NO.:

PLATE NO. :	PAGE NO.:

PLATE NO. :	PAGE NO.:

PLATE NO. 1 : ENGINE ASSEMBLY

Maxima Z LPG & Petrol

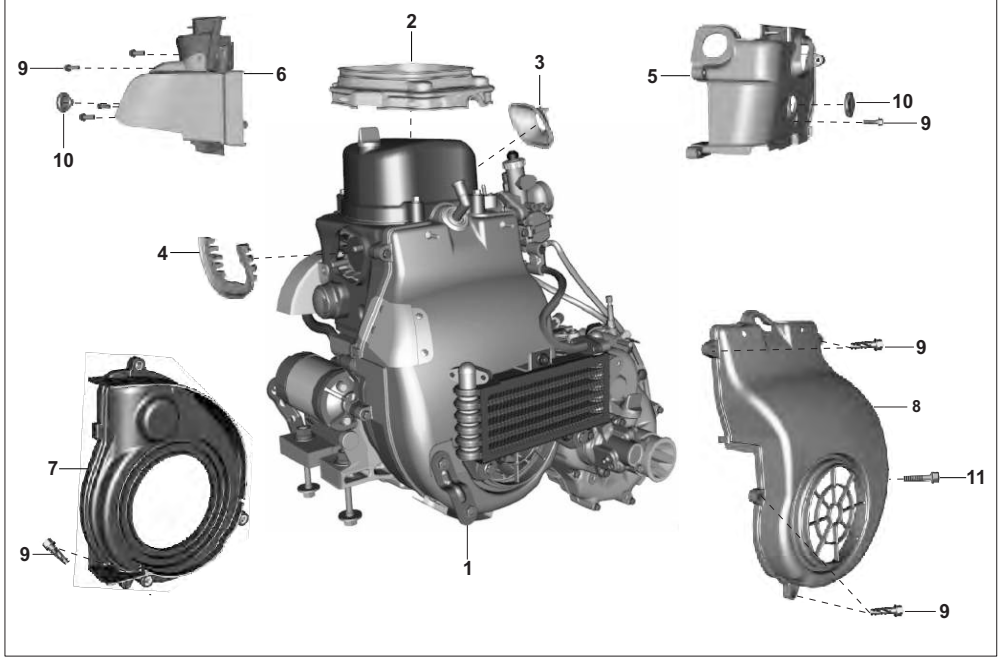

No.	Part No.	Description	LPG	PET	Remarks
1	RA 5010 06	Assembly Scheme Engine	1	–	
	RA 5010 13	Engine Assembly	1	–	For FL UG Model
	AY 5010 07	Assembly Scheme Engine	–	1	
2	AZ 6014 08	Cap Cover Head	1	1	
3	AZ 6014 09	Cap Sealing Manifold	1	1	
4	AZ 6014 14	Pad	1	1	
5	AZ 6014 13	Cowling Intake	1	1	
6	AZ 6014 10	Cowling Assembly Exhaust	1	1	
7	AN 1012 03	Internal Cowling	1	1	
8	AZ 6014 05	Assembly Fan Cover	1	1	
9	KA ED06 25	Bolt Flange	2	2	
10	GF 1011 39	Grommet	2	2	
11	KA ED06 30	Bolt Flanged	1	1	

PLATE NO. 2 : CRANKCASE CLUTCH SIDE

Maxima Z LPG & Petrol

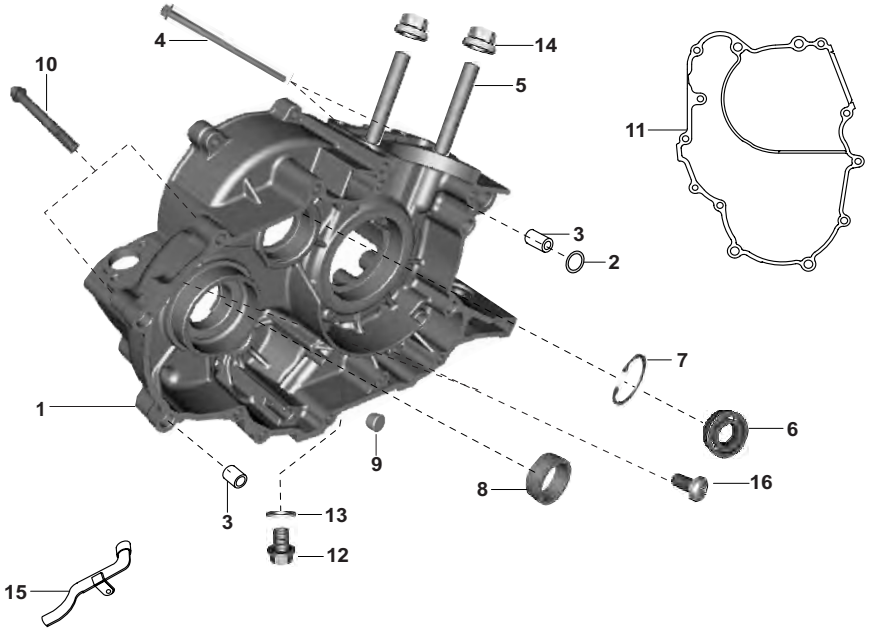

No.	Part No.	Description	LPG	PET	Remarks
1	AN 1011 27	Crankcase Clutch Side	1	1	
2	39 1013 21	'O' Ring	1	1	
3	39 1000 06	Hollow Dowel Pin	2	2	
4	LA D000 62	Bolt Flanged M6x1x105l	2	2	
5	59 0500 02	Stud	2	2	
6	KP AF60 04	Bearing Ball-Ord Clearance & HN3	1	1	
7	KE BB42 17	Circlip Internal	1	1	
8	03 1003 35	Needle Roller Bearing	1	1	
9	DP 1011 54	Plug	1	1	
10	39 1676 04	Bolt Flanged Small	2	2	
11	AN 1011 29	Gasket (Crankcase)	1	1	
12	DU 1012 23	Plug Drain (Magnetic)	1	1	
13	DG 1014 98	Gasket	1	1	
14	39 1055 15	Hex Nut Flange M10	2	2	
15	AA 1012 21	Tube Assembly	1	1	
16	39 0746 01	Screw Pan Cross-m6	2	2	

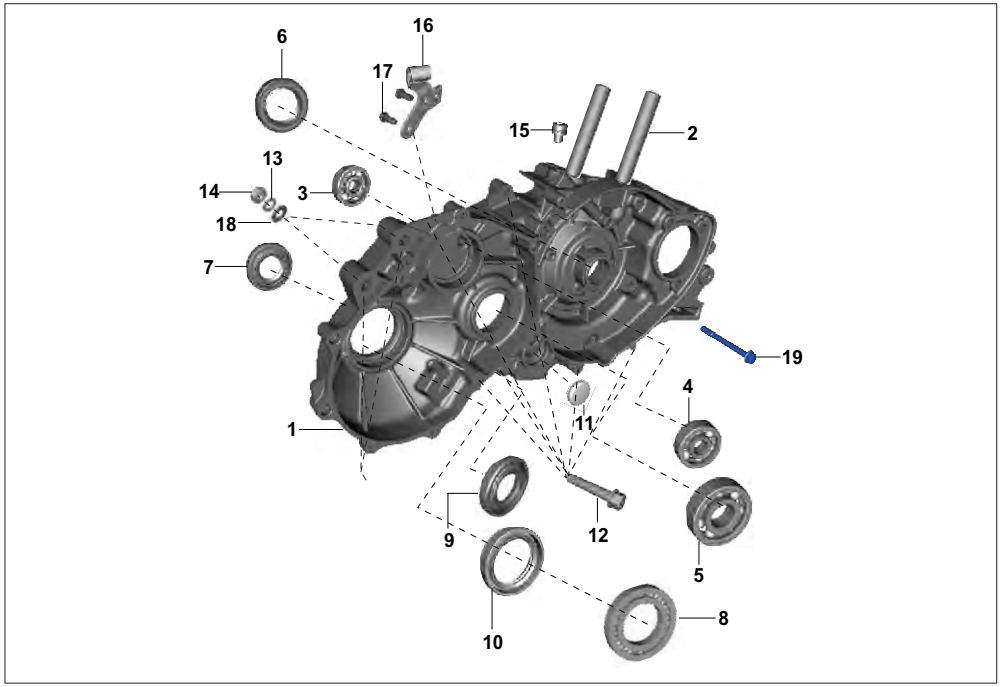

No.	Part No.	Description	LPG	PET	Remarks
1	AU 5410 07	Crankcase Magneto Side	1	1	
	RA 5410 01	Crankcase Magneto Side	1	–	Ref.Cir.IB-274
2	59 0500 02	Stud M10 (Bolt Stud Cylinder)	2	2	
3	30 1510 59	Bearing - Ball C'case Magneto Side	1	1	
4	39 1864 20	Bearing - Ball :- 20 X 52 X 15	1	1	
5	KP BF63 05	Bearing-Ball-C3 Clearance	1	1	
6	AA 1019 50	Seal Oil	1	1	
7	39 1716 19	Oil Seal (Main Shaft)	1	1	
8	24 1301 05	Ball Bearing (Differential)	1	1	
9	39 1716 19	Oil Seal	1	1	
10	BF 5516 13	Oil Seal(Differential)	1	1	
11	AN 1010 62	Cap Sealing C'case Magneto Side	1	1	
12	KA EW06 35	Bolt Flange Small-m6x1xl35xBright	6	6	
13	39 1829 12	Spring Washer	2	2	
14	39 0296 15	Hexagon Nut-m10	2	2	
	LC A000 18	Nut Hex-m10x1.5xht. 8xcl 8xblack	2	2	Ref.Cir.IB-267
15	AN 1012 38	Bolt Restrictor	1	1	
16	AA 1020 31	Bracket Holding - Reverse Cable	1	1	

PLATE NO. 3 : CRANKCASE MAGNETO SIDE
Maxima Z LPG & Petrol

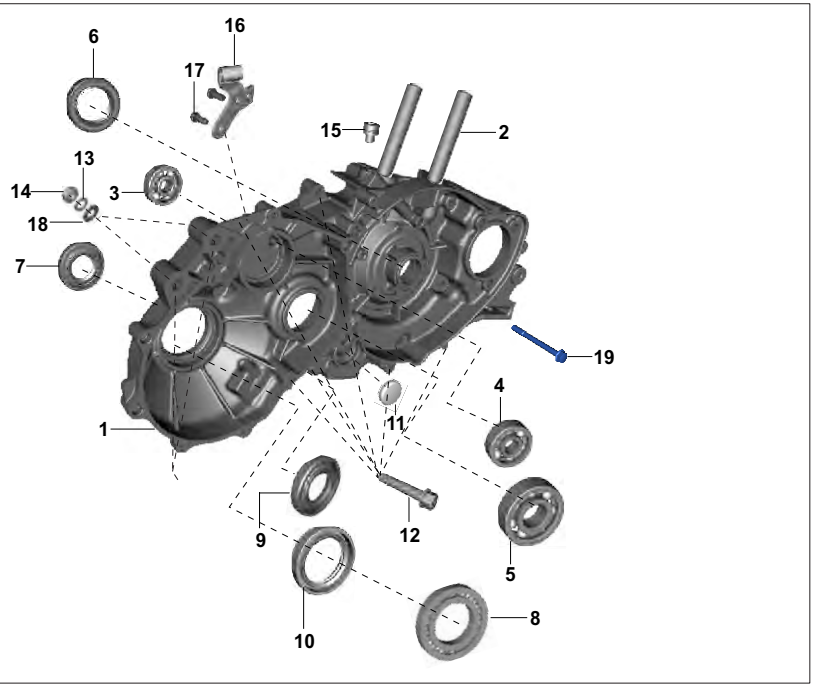

No.	Part No.	Description	LPG	PET	Remarks
17	KA ED06 14	Bolt	2	2	
18	39 0248 11	Washer - Plain	2	2	
19	KA ED06 65	Bolt Flanged Small	4	4	

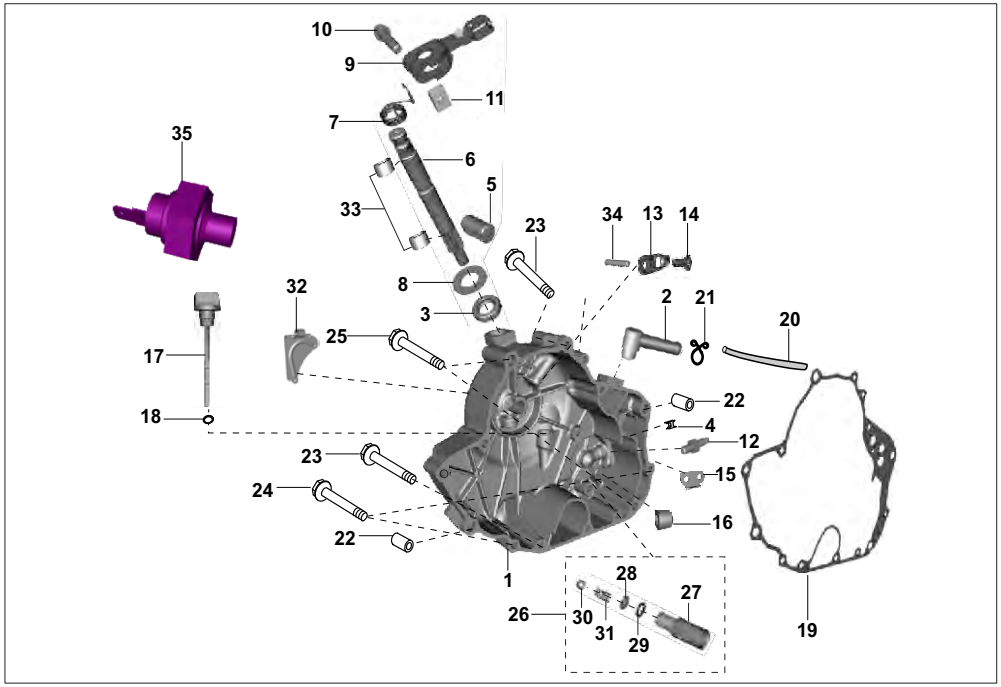

No.	Part No.	Description	LPG	PET	Remarks
1	36 AZ00 59	Kit Clutch Cover (AZ541202)	1	–	
	36 AZ00 84	Kit Clutch Cover (AZ541217)	1	–	For FL UG Model
	AF 1010 87	Cover Clutch	–	1	
	36 RA00 16	Kit Clutch Cover (AY541201)	–	1	For FL UG Model
2	AN 1014 20	Pipe - Breather	1	1	
3	39 1041 19	Seal Oil- Clutch Cover	1	1	
4	AB 1010 38	Grommet Breather	1	1	
5	DH 1011 41	Rack Clutch Push	1	1	
6	AZ 5510 01	Shaft Clutch Release	1	1	
7	AN 1013 76	Spring Torsion Clutch Lever	1	1	
8	39 2443 11	Washer - Plain	1	1	
9	DH 1011 80	Lever Assembly	1	1	
10	KA ED06 25	Bolt-Flange-kae St-d Dia-06 L-25	1	1	
11	DH 1012 75	Nut - Special	1	1	
12	AA 1018 26	Connector -Oil Supply	1	1	
13	AN 1011 89	Plate Stopper, Clutch Cover	1	1	
14	LB C000 04	Screw Csk Cross-m6	1	1	
15	AA 1020 55	Bracket - Cable Oil Pr. Switch	1	1	
16	BA 1020 04	Plug	1	1	

PLATE NO. 4 : CLUTCH COVER

Maxima Z LPG & Petrol

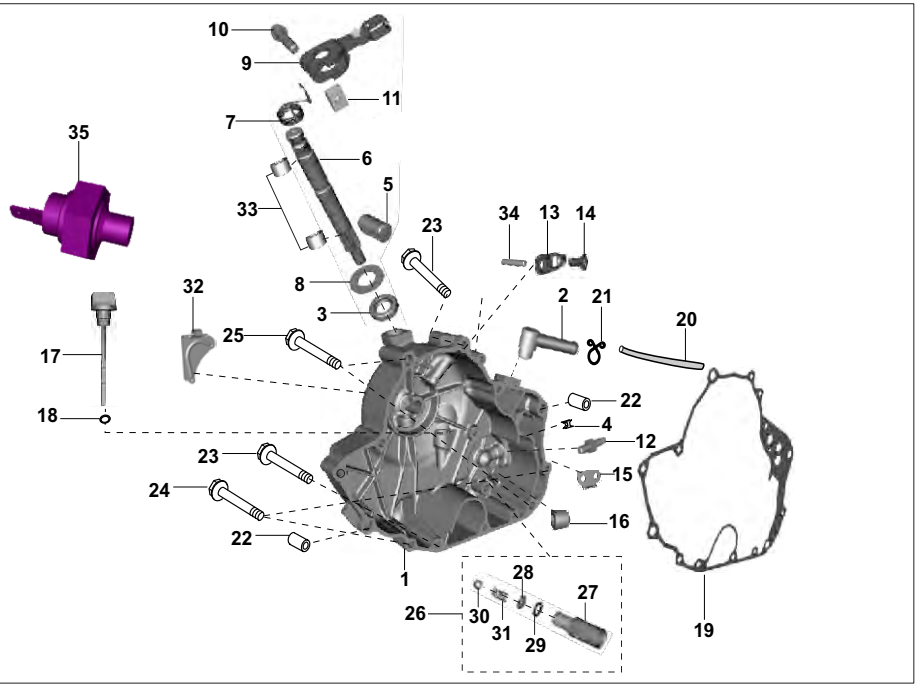

No.	Part No.	Description	LPG	PET	Remarks
17	AA 1016 67	Stick Dip - Clutch Cover	1	1	
18	39 1537 21	O-Ring	1	1	
19	AN 1011 86	Gasket, Clutch Cover	1	1	
20	AZ 5810 47	Tube Breather	1	1	
21	24 1214 76	Clip	1	1	
22	39 1000 06	Hollow Dowel Pin	2	2	
23	39 1065 04	Bolt Flanged - M6x40	5	–	
	KA ED06 40	Bolt Flanged Small	–	5	
24	KA ED06 65	Bolt-Flanged-Small	4	4	
25	39 1721 04	Bolt	3	3	
26	AA 1018 83	Pressure Relief Valve Assembly	1	1	
27	AA 1018 84	Valve Pressure Relief	1	1	
28	DK 1014 72	Washer Pressure Relief Valve	1	1	
29	39 2547 17	Internal Circlip	1	1	
30	30 1012 36	Ball Steel	1	1	
31	DK 1014 49	Spring Prv	1	1	
32	AA 1019 39	Bracket Cable Clutch	1	1	
33	39 1990 20	Bearing - Needle	2	2	

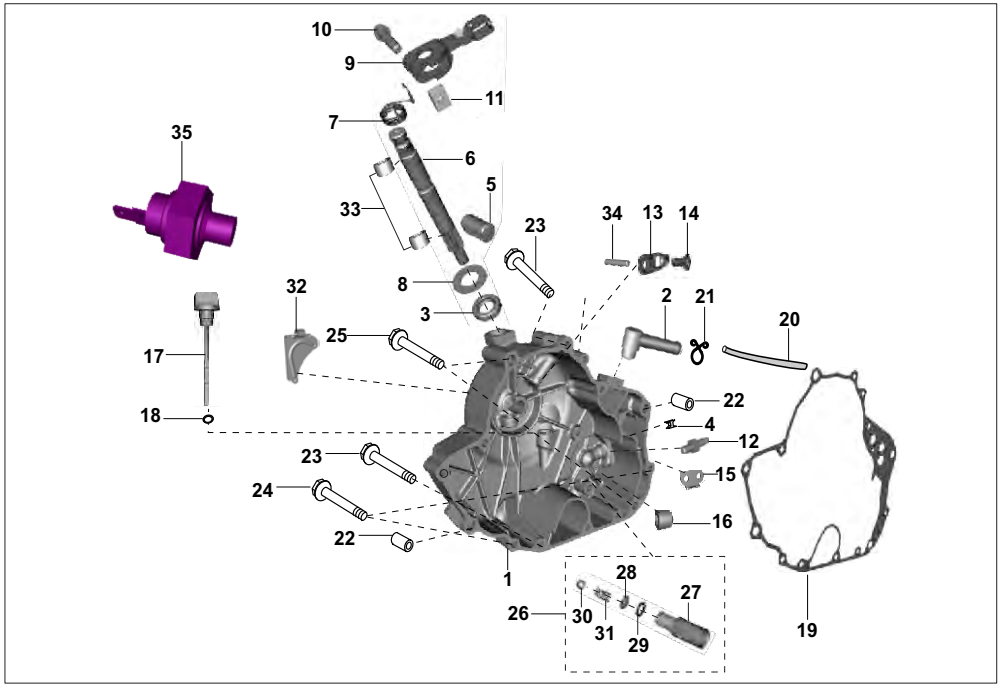

No.	Part No.	Description	LPG	PET	Remarks
34	39 0992 06	Dowel	1	1	
35	AA 2013 25	Switch Oil Pressure	–	1	
	AA 2015 01	Switch Pressure Oil	–	1	

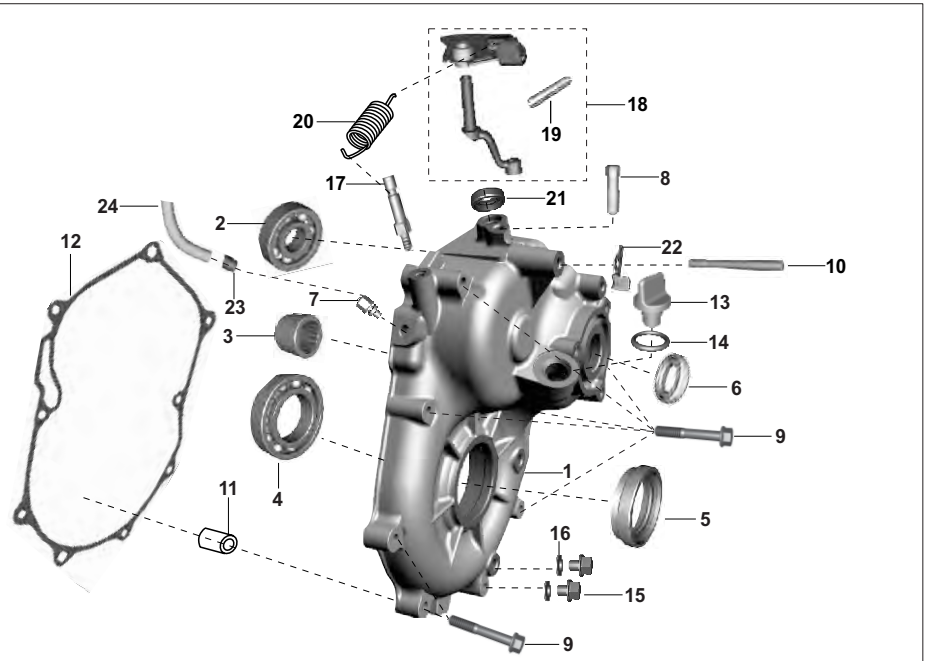

No.	Part No.	Description	LPG	PET	Remarks
1	AA 1020 26	Differential Cover	1	–	
	AA 1022 09	Cover Differential	1	1	For FL UG Model
2	30 1510 39	Bearing Ball	1	1	
3	39 1435 20	Needle Roller Bearing	1	1	
4	KP BB60 07	Ball Bearing	1	1	
5	BF 5516 13	Oil Seal	1	1	
6	39 1869 19	Oil Seal	1	1	
7	24 1020 46	Breather	1	1	
8	LA A000 22	Bolt In Place Of Spring Dowel	1	1	
9	LA D000 35	Bolt Flanged	7	7	
10	LA J000 01	Bolt Stud	1	1	
11	39 1000 06	Hollow Dowel Pin	2	2	
12	AN 1013 12	Gasket - Differential Cover	1	–	
	AA 1022 10	Gasket Cover Differential	1	1	For FL UG Model
13	AN 1310 07	Oil Plug	1	1	
	AA 1016 67	Stick Dip-Clutch Cover	1	1	For FL UG Model
14	KJ AB14 24	'O' Ring	1	1	
15	28 1011 41	Plug - Oil	2	2	
16	39 1585 11	Washer Oil Plug	2	2	

PLATE NO. 5 : DIFFERENTIAL COVER

Maxima Z LPG & Petrol

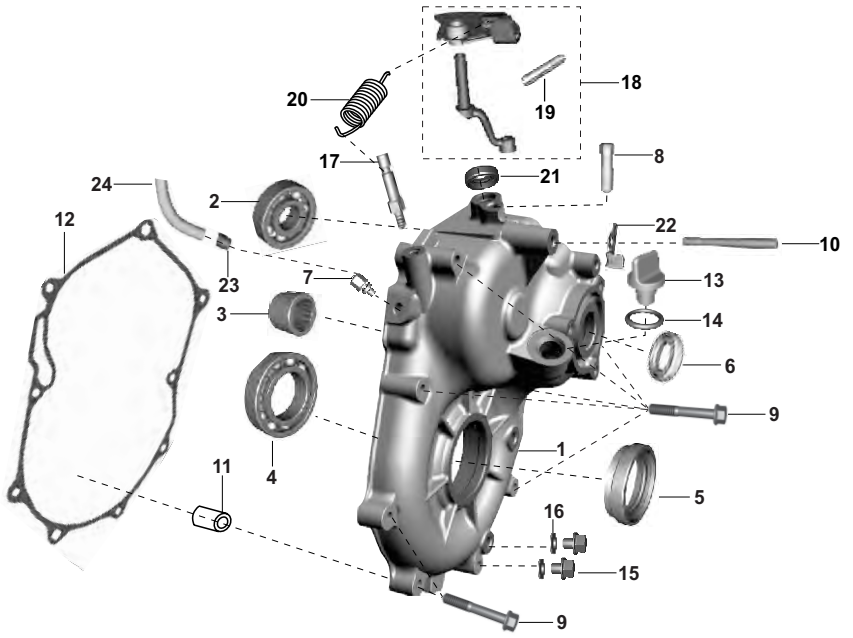

No.	Part No.	Description	LPG	PET	Remarks
17	AA 1012 12	Pin For Tension Spring	1	1	
18	AA 1020 18	Assembly Sector Comp Rev Control	1	1	
19	39 0426 06	Spring Type Straight Pin	1	1	
20	AN 1310 22	Tension Spring	1	1	
21	39 1046 19	Oil Seal	1	1	
22	AA 1018 23	Bracket Cable Arrester	1	1	
23	AP 1210 74	Clip Hose	1	1	
24	AN 1014 98	Pipe Assembly Breather	1	1	

PLATE NO. 6 : CYLINDER / PISTON ASSEMBLY

Maxima Z LPG & Petrol

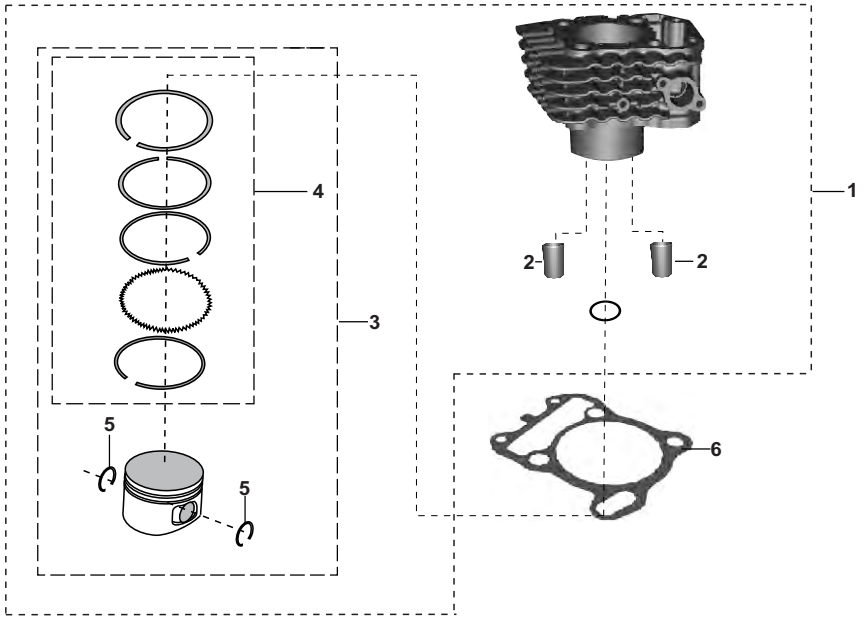

No.	Part No.	Description	LPG	PET	Remarks
1	36 RA00 13	Cylinder Block Piston Assembly	1	1	
2	39 2181 06	Pin - Hollow Dowel :- 14 X 20	2	2	
3	RA 5212 00	Assembly Piston	1	1	
4	36 AN00 34	Kit Piston Ring	1	1	
5	AA 1020 87	Wire Circlip	2	2	
6	AN 1011 35	Gasket Cylinder	1	1	

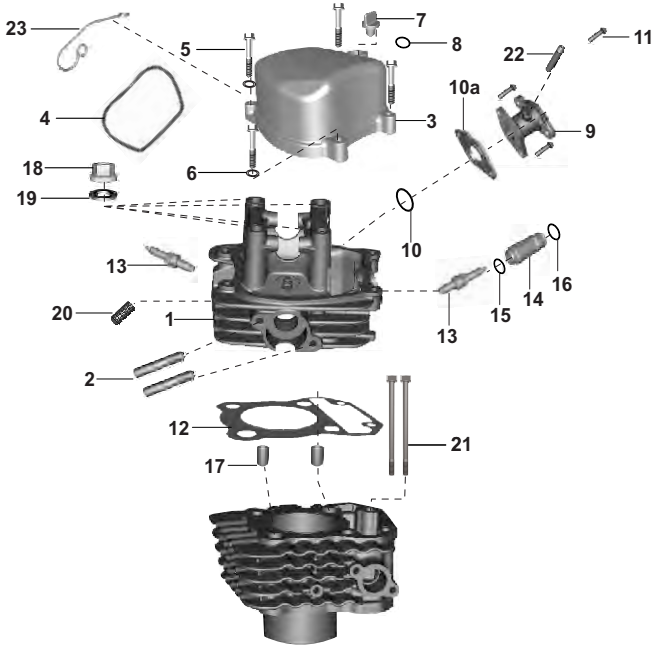

No.	Part No.	Description	LPG	PET	Remarks
1	36 AZ00 52	Assembly Cylinder Head Valve	1	–	With SAI - Non UG
	AF 1014 21	Head Cylinder	1	–	For FL UG Model
	36 RA00 14	Assly Cyl. Head Valve	–	1	For FL UG Model
2	LA J000 16	Bolt Stud	2	2	
3	AN 1011 77	Head Cover	1	1	
4	AA 1018 44	Seal Head Cover	1	1	
5	59 0400 38	Bolt - Flanged	4	4	
6	39 1309 11	Plain Washer	2	2	
7	AN 1310 07	Cap - Oil Filling	1	1	
	JG 5412 30	Cap Oil Filling	1	1	For FL UG Model
8	KJ AB14 24	O-Ring	1	1	
9	AZ 5814 09	Assembly Manifold With Nipple	1	1	For FL UG Model
	AY 5814 00	Manifold Assembly	–	1	
10	39 1283 21	Ring - O For AN121201	2	2	
10a	AA 1018 38	Gasket- Manifold	1	1	
11	KA ED06 22	Bolt - Flanged :- Manifold	2	2	
12	AZ 5210 03	Gasket - Cylinder Head	1	1	
13	AA 1111 53	Plug Spark With Solid Post-FMG	2	2	
14	AZ 5110 10	Sleeve Spark Plug	1	1	
15	KJ AC18 24	O-Ring	1	1	

PLATE NO. 7 : CYLINDER HEAD

Maxima Z LPG & Petrol

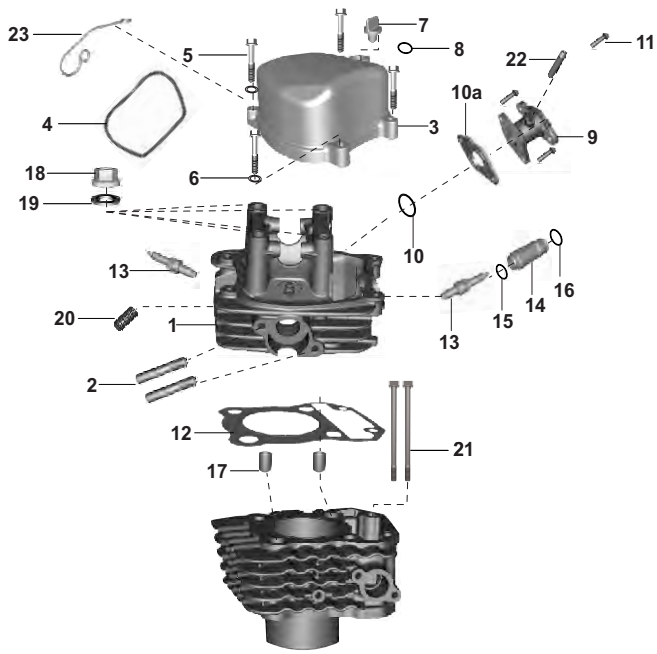

No.	Part No.	Description	LPG	PET	Remarks
16	39 1283 21	O-Ring Spark Plug	1	1	
17	39 2181 06	Hollow Dowel Pin	2	2	
18	39 1055 15	Hex Nut (Cylinder Head Nut)	4	4	
19	39 0248 11	Washer - Plain	4	4	
20	39 2608 01	Screw - Grub :- M5 X 0.8 X 7	1	1	
21	LA D000 62	Bolt Flanged M6x1x105l	2	2	
22	JE 5814 16	Nipple Connector Manifold SAI	1	–	
23	AA 1021 54	Hook Engine Breather Tube	1	1	

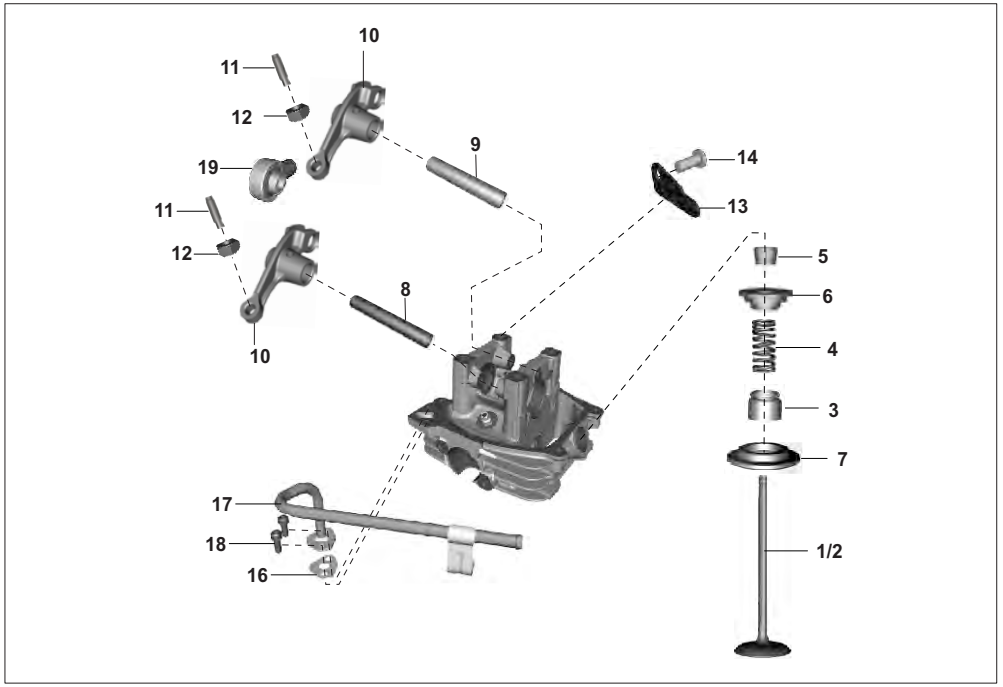

No.	Part No.	Description	LPG	PET	Remarks
1	AZ 5112 01	Valve Intake	1	1	
2	AZ 5112 02	Valve Exhaust	1	1	
	AF 1014 45	Valve Exhaust	1	1	For FL UG Model
3	39 1035 19	Seal - Oil	2	2	
4	AA 1018 75	Spring For Engine Valve	2	2	
5	31 1010 19	Collet	4	4	
6	31 1010 18	Retainer Valve Spring	2	2	
7	28 1011 29	Seat Spring	2	2	
8	AZ 5112 07	Shaft Rocker Arm Intake	1	1	
9	AZ 5112 08	Shaft Rocker Arm Exhaust	1	1	
10	JH 5112 07	Assembly Rocker Arm C101	2	2	
11	JL 5112 27	Screw Tappet	1	1	
12	39 0973 15	Nut - Hexagon :- M5 X 0.5	2	2	
13	AN 1011 47	Plate Stopper	1	1	
14	DX 1010 74	Screw Pan Cross M6	1	1	
15	36 RA00 03	Kit Valve 4S -236	1	1	N.I.
16	AA 1020 82	Gasket	1	–	
17	AZ 5824 05	Tube Assembly SAI	1	–	
18	KA CA06 14	Bolt Master Kac	2	–	

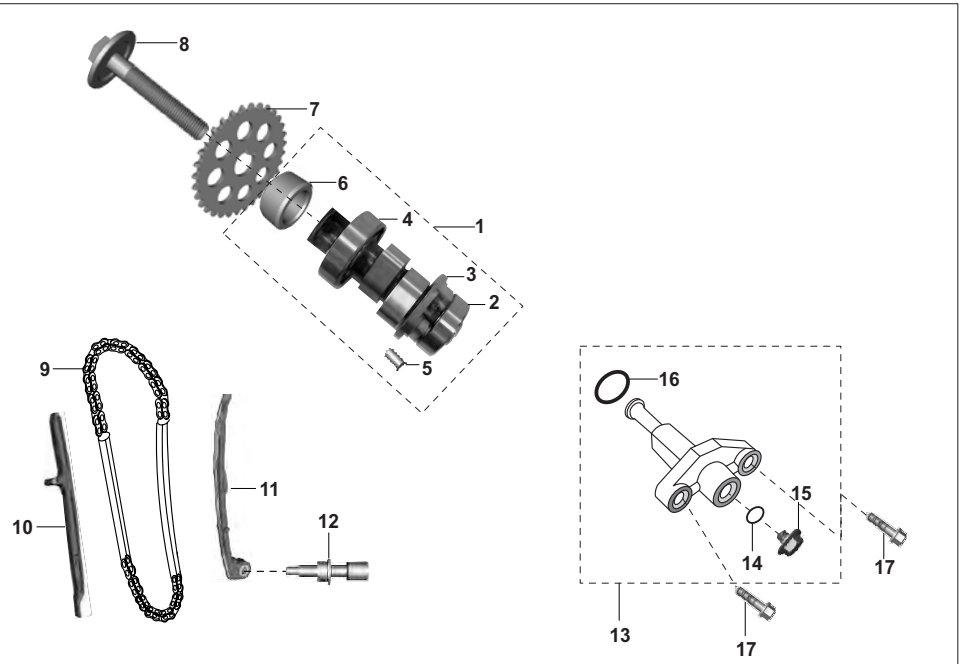

No.	Part No.	Description	LPG	PET	Remarks
1	AZ 5112 04	Camshaft Assembly	1	–	
	AU 5110 05	Camshaft Assembly	–	1	
	AY 5112 00	Camshaft Assembly	–	1	For FL UG Model
2	39 1880 20	Bearing - Ball :- 15 X 32 X 9	1	1	
3	AN 1013 23	Decompression Assembly	1	1	
4	39 2542 20	Bearing Ball	1	1	
5	KH DA03 06	Pin Dowel	1	1	
6	AA 1018 14	Collar - Cam Sprocket	1	1	
7	PD 5112 29	Sprocket Camshaft	1	1	
	AM 1011 73	Sprocket Camshaft	1	1	
8	AN 1011 82	Bolt Socket Head	1	1	
9	DK 1010 64	Timing Chain	1	1	
	AM 1011 74	Chain	1	1	
10	AN 1011 66	Guide Chain	1	1	
	AM 1011 71	Guide Chain Tight Side	1	1	
11	AN 1012 57	Guide Chain (Tensioner Side)	1	1	
	AM 1011 72	Guide Chain Slack Side	1	1	
12	AN 1012 50	Pin Guide Chain	1	1	
13	DS 1012 77	Tensioner Assembly With O Ring	1	1	
14	39 1790 21	'O' Ring	1	1	
15	DD 1010 62	Bolt Flange M6x1-l10	1	1	
16	39 1014 21	Ring - O	1	1	
17	KA ED06 25	Bolt Flange	1	1	

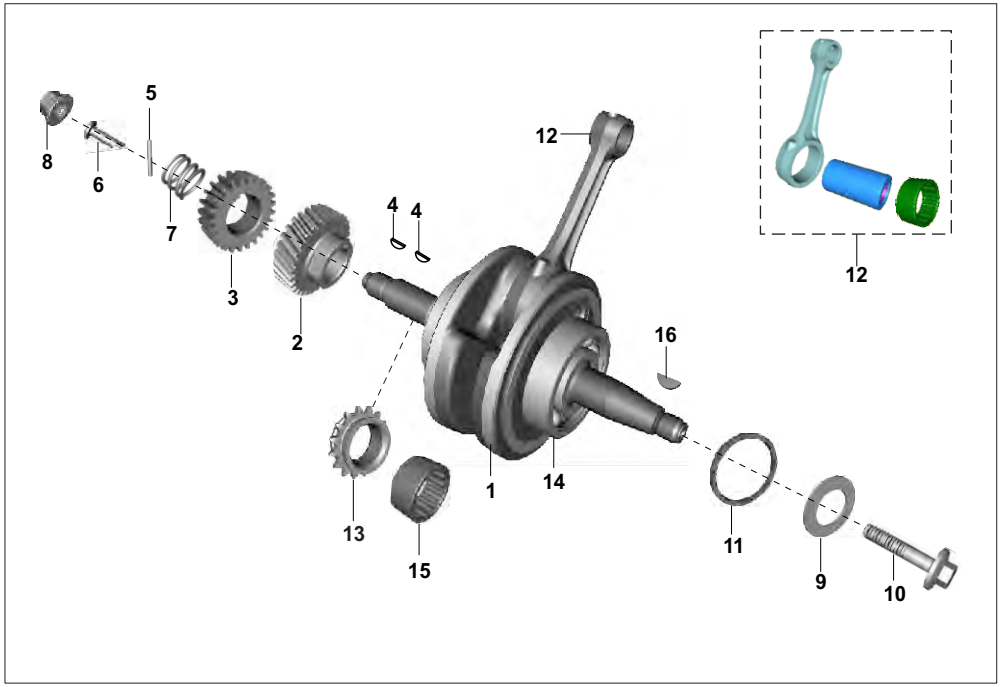

No.	Part No.	Description	LPG	PET	Remarks
1	AZ 5310 00	Assembly Crankshaft	1	1	
	AT 5310 07	Crankshaft Assembly	1	1	For FL UG Model
	AA 1025 40	Crankshaft Assembly	1	1	
2	AZ 5512 02	Pinion Primary	1	1	
	AN 1013 41	Pinion Primary	1	1	
3	AA 1014 24	Oil Pump Drive Gear	1	1	
4	31 1011 73	Key Woodruff	2	2	
5	39 1927 07	Roller Pin	1	1	
6	AA 1011 38	Plunger Oil	1	1	
7	AA 1011 39	Spring Plunger	1	1	
8	39 1885 15	Nut	1	1	
9	LD B000 47	Washer Plain	1	1	
10	LA D001 24	Bolt Flange	1	1	
11	DK 1010 97	Damper Spring	1	1	
12	36 AZ00 49	Kit Connecting Rod 4S -236	1	1	
13	AN 1011 55	Sprocket - Crankshaft	1	1	
	AT 5310 08	Sprocket	1	1	For FL UG Model
14	39 1931 20	Bearing - Ball :- 28 X 68 X 18	2	2	
15	39 2153 20	Needle Roller Bearing	1	1	
16	AP 1012 57	Key Woodruff - C'shaft Magneto Side	1	1	

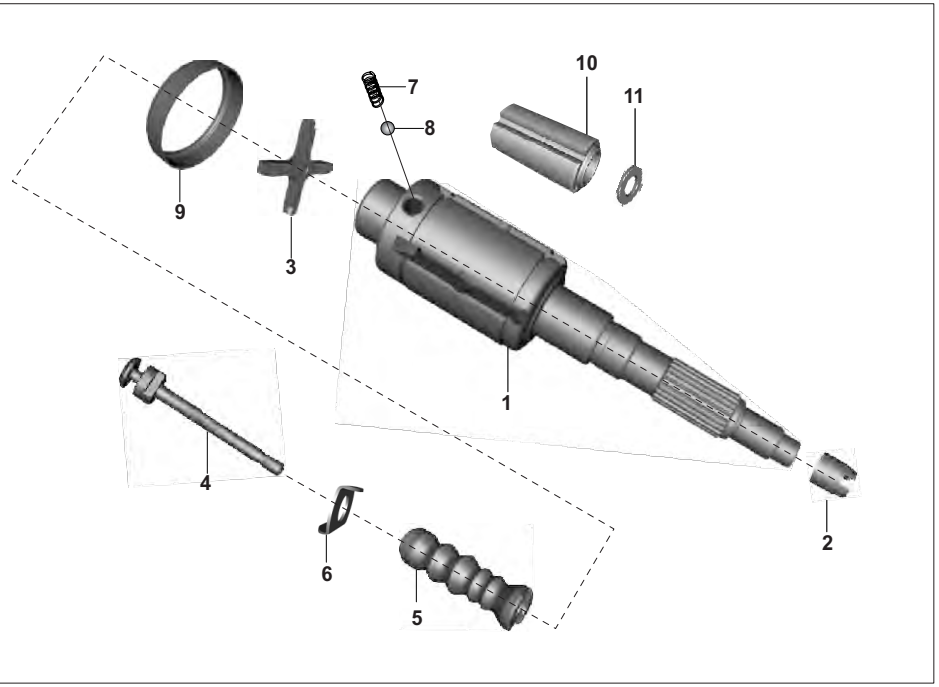

No.	Part No.	Description	LPG	PET	Remarks
1	AZ 5510 03	Main Shaft	1	1	
2	AA 1012 95	Drive Bush	1	1	
3	AB 1010 67	Cross	1	1	
4	AA 1018 68	Guide Stem	1	1	
5	AA 1021 64	Selector Gear	1	1	
6	BA 1320 45	Plain Washer	1	1	
7	AA 1021 63	Spring Detent	2	2	
8	01 1801 23	Steel Ball	2	2	
9	AA 1010 61	Cup Gear Shifter	1	1	
10	AN 1011 98	Sleeve, Main Shaft	1	1	
11	AN 1012 00	Spacer, Sleeve	1	1	

PLATE NO. 12 : GEAR TRANSMISSION

Maxima Z LPG & Petrol

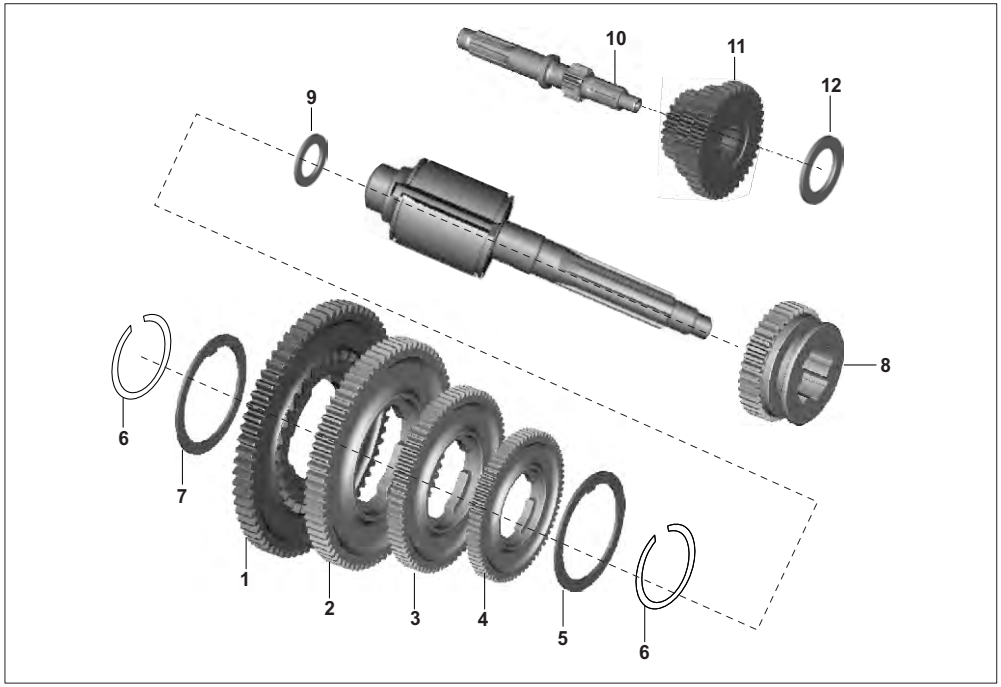

No.	Part No.	Description	LPG	PET	Remarks
1	AN 1013 79	Gear Speed-1st	1	1	
2	AZ 5512 11	Gear Speed-2nd	1	1	
3	AZ 5512 12	Gear Speed-3rd	1	1	
4	AZ 5512 13	Gear Speed-4th	2	2	
5	15 1011 71	Spacer Ring	1	1	
6	21 1007 11	Circlip	2	2	
7	01 1007 11	Shoulder Ring No. 1	1	1	
7	01 1007 12	Shoulder Ring No. 2	1	1	
7	01 1007 13	Shoulder Ring No. 3	1	1	
7	01 1007 14	Shoulder Ring No. 4	1	1	
8	AZ 5516 03	Gear Reverse Control	1	1	
9	AA 1010 55	Thrust Washer	1	1	
10	AN 1013 39	Multiple Gear Shaft	1	1	
11	AZ 5512 10	Gear Multiple	1	1	
12	AN 1013 47	Thrust Washer (M.g.Shaft)	1	1	

PLATE NO. 13 : DIFFERENTIAL ASSEMBLY

Maxima Z LPG & Petrol

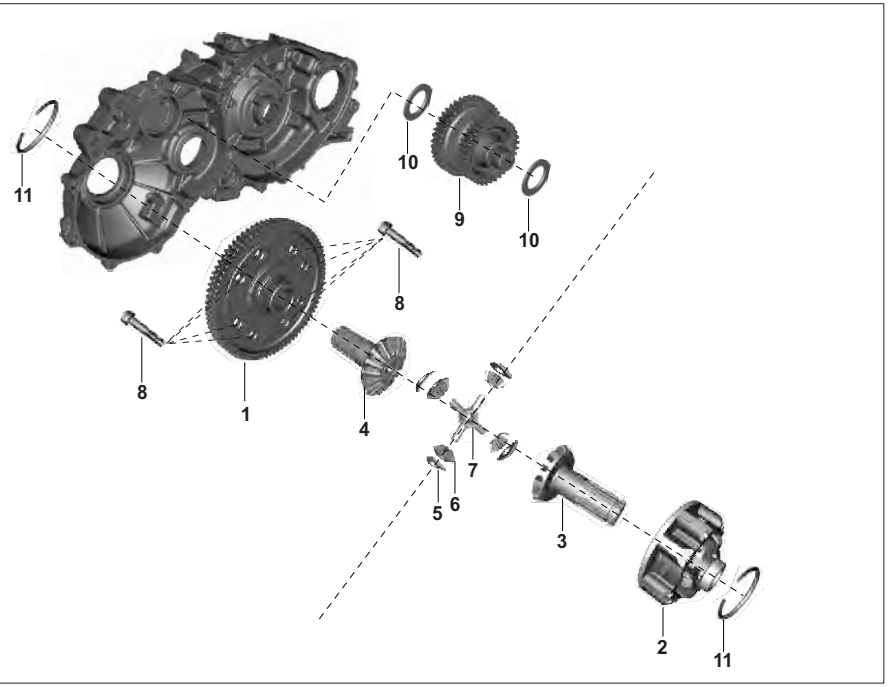

No.	Part No.	Description	LPG	PET	Remarks
1	AZ 5516 02	Gear Differential	1	1	
2	AN 1014 06	Housing Assembly Satellite Gear	1	1	
3	AN 1014 34	Gear Bevel Sg. Hsg. Side	1	1	
4	AN 1014 35	Gear Bevel Diff. Gear Side	1	1	
5	22 1310 14	Spacer	4	4	
6	AL 1310 58	Gear - Satellite	4	4	
7	AL 1310 55	Cross - Differential	1	1	
8	AN 1310 18	Bolt Differential Pre-coating	8	8	
9	AZ 5516 04	Gear Idler	1	1	
10	AA 1010 58	Thrust Washer Idler Gear	2	2	
11	BH 5518 00	Clip Lock Drive Shaft	2	2	

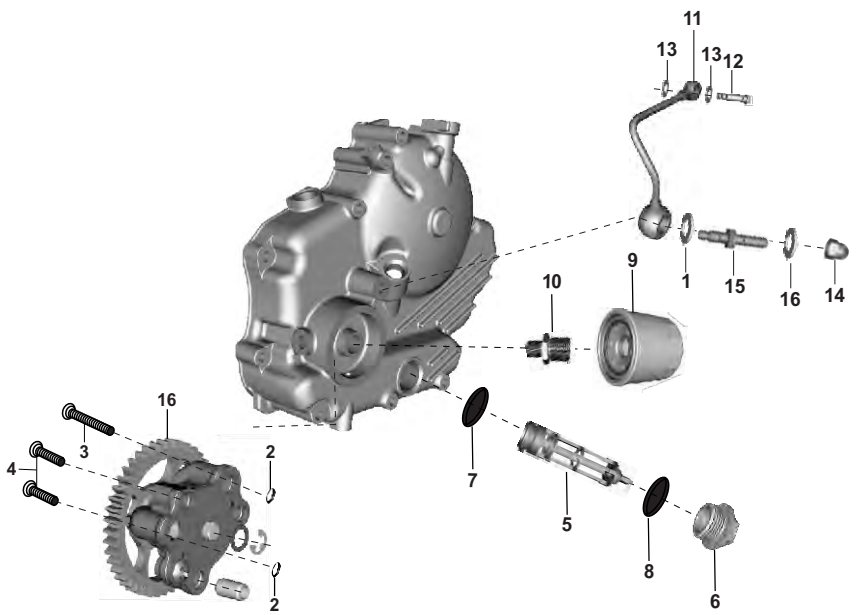

No.	Part No.	Description	LPG	PET	Remarks
1	DK 1012 37	Washer Copper Oil Cooler	2	2	
2	39 1013 21	'O' Ring	2	2	
3	39 0730 01	Screw Pan	1	1	
4	39 0748 01	Screw Pan	2	2	
5	JA 5410 19	Mesh Filter Oil Pump	1	1	
6	28 1010 22	Cap - Strainer	2	2	
7	JA 5410 20	O-Ring Mesh Filter Oil Pump	1	1	
8	39 1657 21	Ring - O	1	1	
9	AN 1011 90	Filter Assembly - Oil	1	1	
10	EC 5410 04	Adapter Oil Filter	1	1	
11	AZ 5712 09	Pipe Assembly-Banjo	1	1	
12	AN 1011 88	Bolt Special, Clutch Cover	1	1	
13	31 1210 06	Gasket	2	2	
14	AN 1011 13	Dom Nut	1	1	
15	AA 1018 26	Connector-Oil Supply	1	1	
16	AA 1213 36	Oil Pump Assembly	1	1	

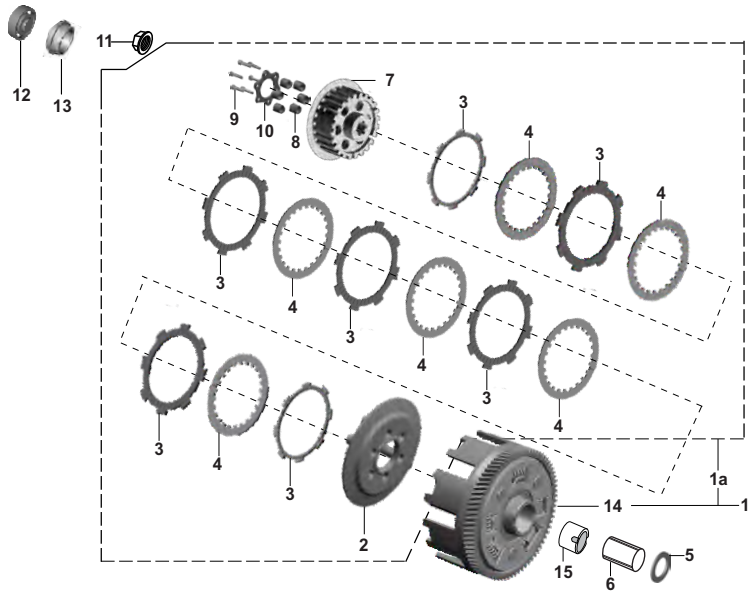

No.	Part No.	Description	LPG	PET	Remarks
1	AN 1014 88	Clutch Complete	1	1	
1a	AA 1021 62	Plate Assembly-Clutch	1	1	
2	AA 1014 71	Wheel Clutch	1	1	
3	36 RA00 02	Friction Plate Kit- 236	1	1	N.I.
4	AA 1014 72	Plate Clutch	6	6	
5	39 2008 11	Plain Washer	1	1	
6	AA 1012 13	Collar	1	1	
7	AA 1021 66	Hub Clutch	1	1	
8	AA 1021 65	Spring Clutch	6	6	
9	KA AD05 25	Bolt	6	6	
10	AA 1014 74	Holder Clutch	1	1	
11	39 1938 15	Flange Nut	1	1	
12	DH 1017 95	Clutch Lifter Bearing	1	1	
13	AN 1013 61	Plate Holder	1	1	
14	AN 1014 89	Housing Assembly Clutch	1	1	
15	AA 1010 09	Bush Gear Primary	1	1	

PLATE NO. 16 : FARE METER DRIVE UNIT

Maxima Z LPG & Petrol

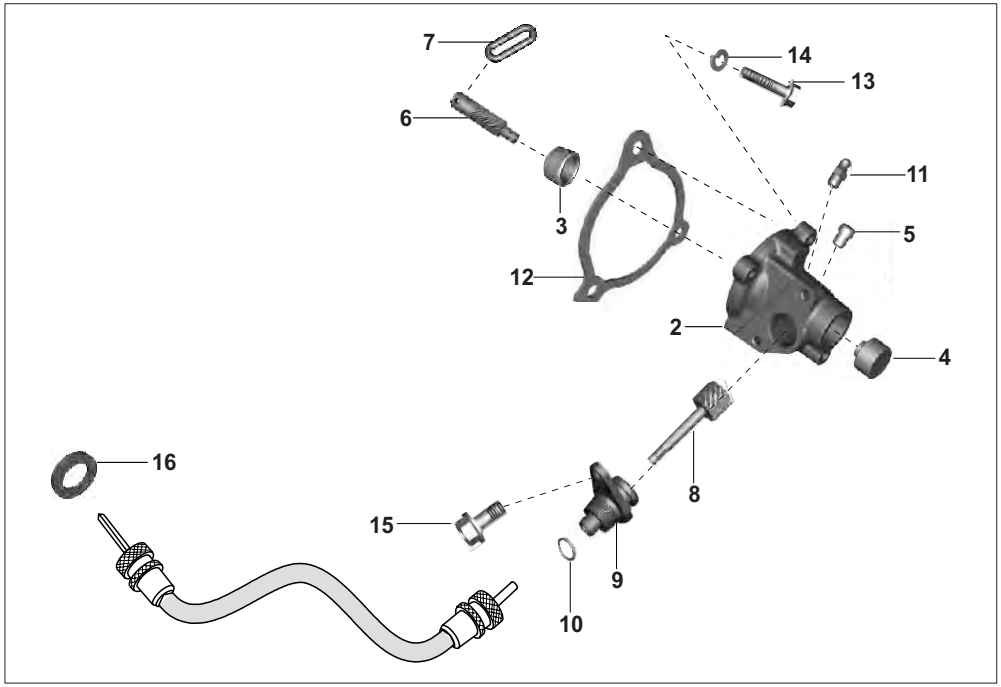

No.	Part No.	Description	LPG	PET	Remarks
1	AN 1014 32	Fare Meter Assembly Complete	1	1	N.I.
2	AA 1017 45	Fare Meter Housing Assembly	1	1	
3	24 1310 07	Bush	1	1	
4	24 1310 08	Plug	1	1	
5	03 1701 09	Pin	1	1	
6	AA 1017 50	Fare Meter Pinion	1	1	
7	24 1310 03	Wire	1	1	
8	AZ 5526 04	Gear Fare Meter	1	1	
9	AA 1017 42	Bush	1	1	
10	39 1587 21	O-Ring (Speedo Adaptor)	1	1	
11	23 1613 05	Grease Nipple	1	1	
12	AA 1310 04	Gasket	1	1	
13	59 0400 29	Bolt With Split Pin	3	3	
14	39 1830 12	Washer - Spring	3	3	
15	KA DA05 12	Hex Bolt	1	1	
16	AA 1017 47	Seal Rubber Fare Meter Cable	1	1	

PLATE NO. 17 : GEAR SHIFTER ASSEMBLY

Maxima Z LPG & Petrol

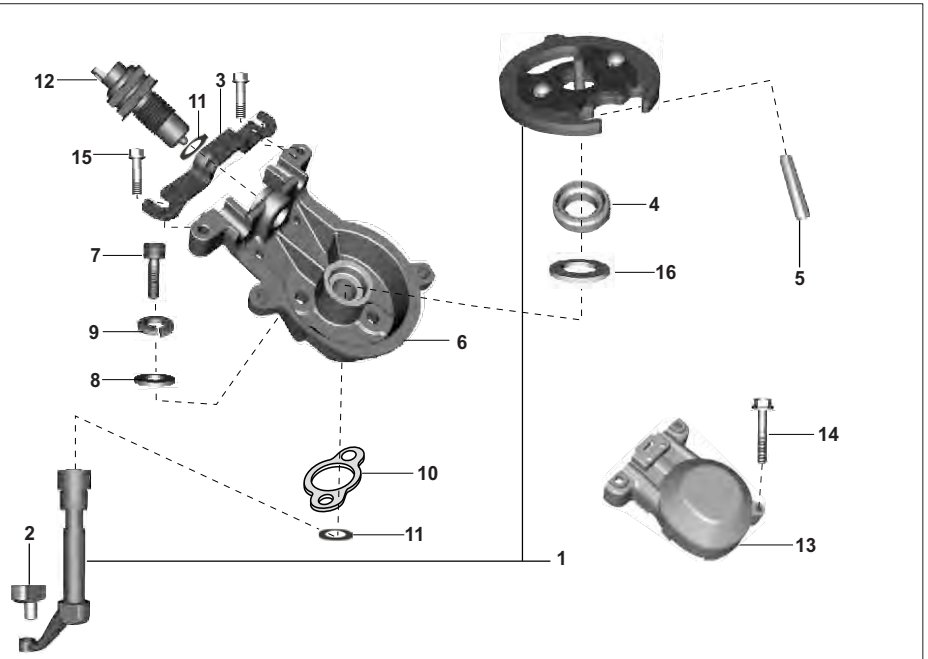

No.	Part No.	Description	LPG	PET	Remarks
1	AA 1017 36	Sector Assembly Comp. With Lever	1	1	
2	BA 1321 41	Slider Block	1	1	
3	AA 1016 65	Bracket Fix End Cable Guide	1	1	
4	39 1046 19	Seal Oil	1	1	
5	39 0426 06	Spring Type Straight Pin	1	1	
6	AA 1018 19	Flange Assembly Gear Shifter	1	1	
7	39 1197 04	Bolt Socket	2	2	
8	39 0198 11	Plain Washer	2	2	
9	39 1826 12	Spring Washer	2	2	
10	AA 1010 84	Gasket Sector Flange	1	1	
11	39 0804 11	Plain Washer	2	2	
12	AP 1110 23	Switch Neutral	1	1	
13	AA 1021 67	Cover Assembly-Gear Shifter	1	1	
14	KA DD05 30	Bolt Flanged	1	1	
15	39 2060 04	Bolt Flanged	2	2	
16	39 2349 11	Washer Plain	1	1	

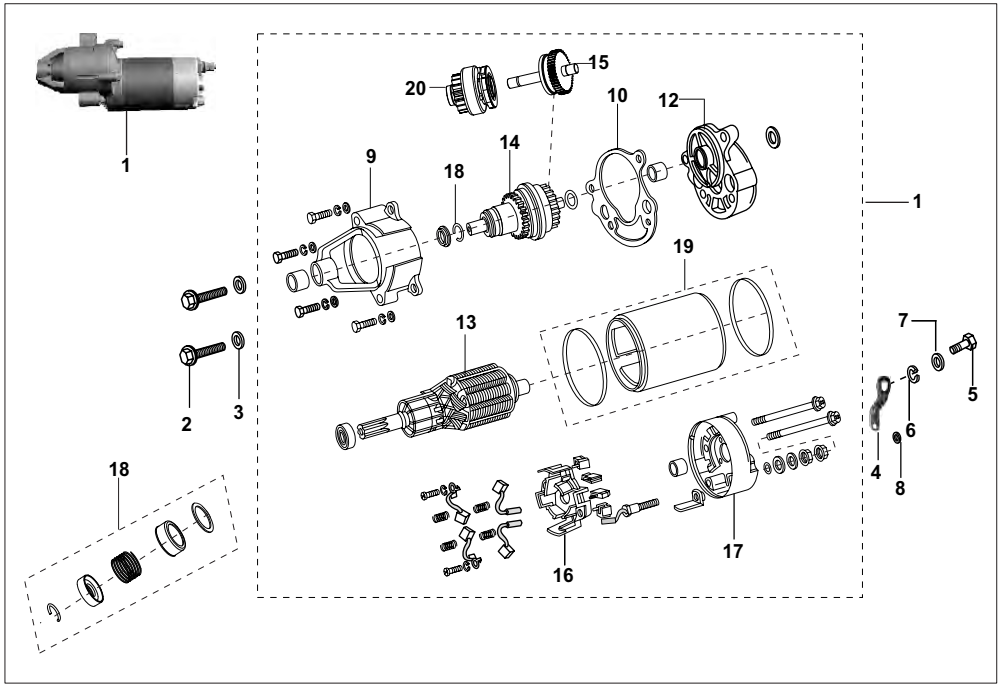

No.	Part No.	Description	LPG	PET	Remarks
1	AF 1110 21	Starter Motor Assembly Complete	1	1	
2	KA CC08 35	Socket Bolt-Motor Mtg	2	–	
	KA CH08 35	Bolt Socket	–	2	
3	39 1211 11	Washer Plain	2	2	
4	AA 1110 67	Support Bracket Assembly	1	1	
5	KA DD08 14	Bolt Flanged	1	1	
6	39 1826 12	Spring Washer	1	1	
7	39 0198 11	Washer Plain	1	1	
8	AA 1110 49	Grommet For Sm Bracket	1	1	
9	AF 1110 23	Fixing Bracket Assembly (2 Bolt)	1	1	
10	AA 1111 18	Gasket	1	1	
11	AA 1110 79	Cover Assembly-end Cover	1	1	N.I.
12	AA 1110 81	Intermediate Bracket Assembly	1	1	
13	AA 1110 82	Armature Assembly	1	1	
14	AA 1110 94	Gear Shaft Assembly (Exend Casting)	1	1	
15	AA 1110 95	Gear Shaft Unit (Exend Casting)	1	1	
16	AA 1110 85	Brush Box Assembly	1	1	
17	AA 1110 80	Bracket End Cover Assembly	1	1	
18	36 AA40 18	Kit_ Stater Motor Spring	1	1	

PLATE NO. 18 : STARTER MOTOR ASSEMBLY | Maxima Z LPG & Petrol

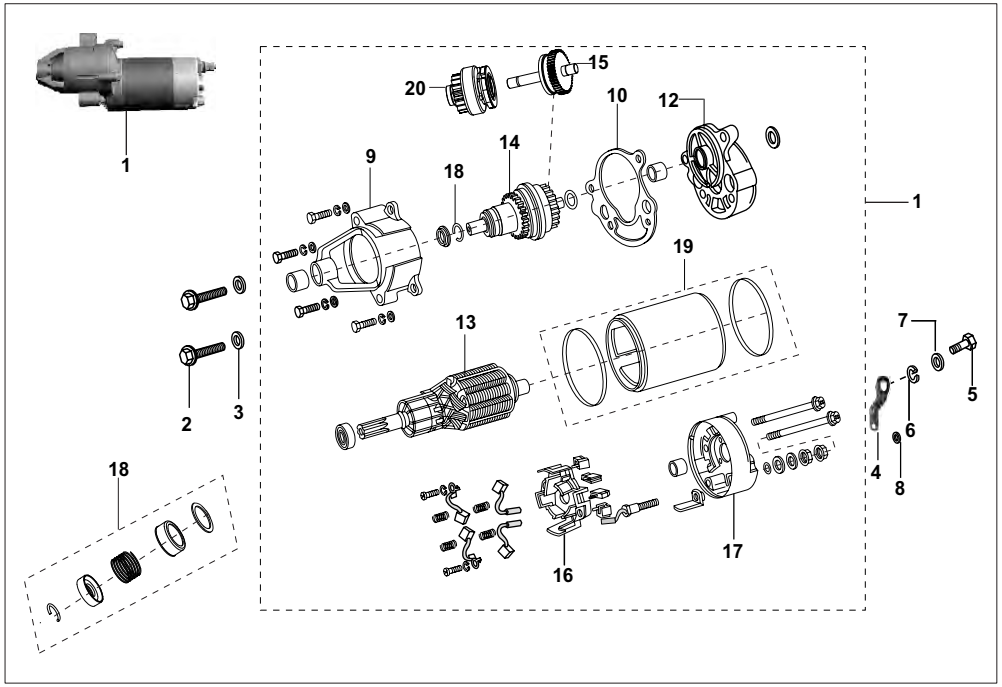

No.	Part No.	Description	LPG	PET	Remarks
19	AB 1111 07	Yoke & Magnet Assembly Kit	1	1	
20	AA 1110 83	Drive Assembly	1	1	

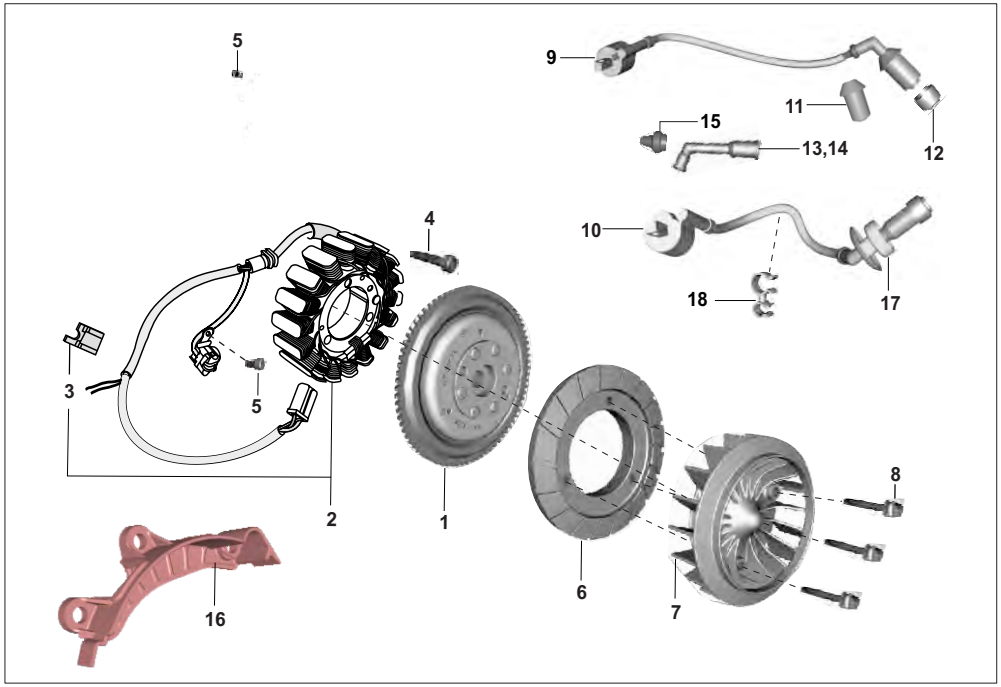

No.	Part No.	Description	LPG	PET	Remarks
1	AA 1112 02	Rotor Assembly	1	1	
2	AA 1112 03	Stator Assembly	1	1	
	AZ 3510 10	Stator Assembly	1	1	For FL UG Model
3	AA 1012 20	Grommet For Pickup	1	1	
4	AP 1012 20	Hex Socket Head Bolt	3	3	
5	LA C000 25	Bolt Socket	2	2	
6	AZ 6014 21	Fan Base	1	1	
7	AZ 6014 03	Fan	1	1	
8	LA H000 01	Bolt Wsp	3	3	
9	AZ 3512 09	Coil H.T. With Cable And Cap - LH	1	1	
10	AN 1110 43	Coil H.T. LH With Cable	1	1	
11	AF 1110 34	Grommet For Spark Plug Cap-LH	1	1	
12	AA 1111 48	Grommet Spark Plug LH	1	1	
13	AF 1110 32	Cap Spark Plug RH S Post	1	1	
14	AF 1110 31	Cap Spark Plug LH S Post	1	1	
15	AF 1110 33	Grommet For H. T. Cable	2	2	
16	AZ 5010 14	Guard Magneto	1	1	
17	AF 1110 35	Grommet For Spark Plug Cap RH	1	1	
18	AA 1410 67	Clip Swivel Spacer	1	1	

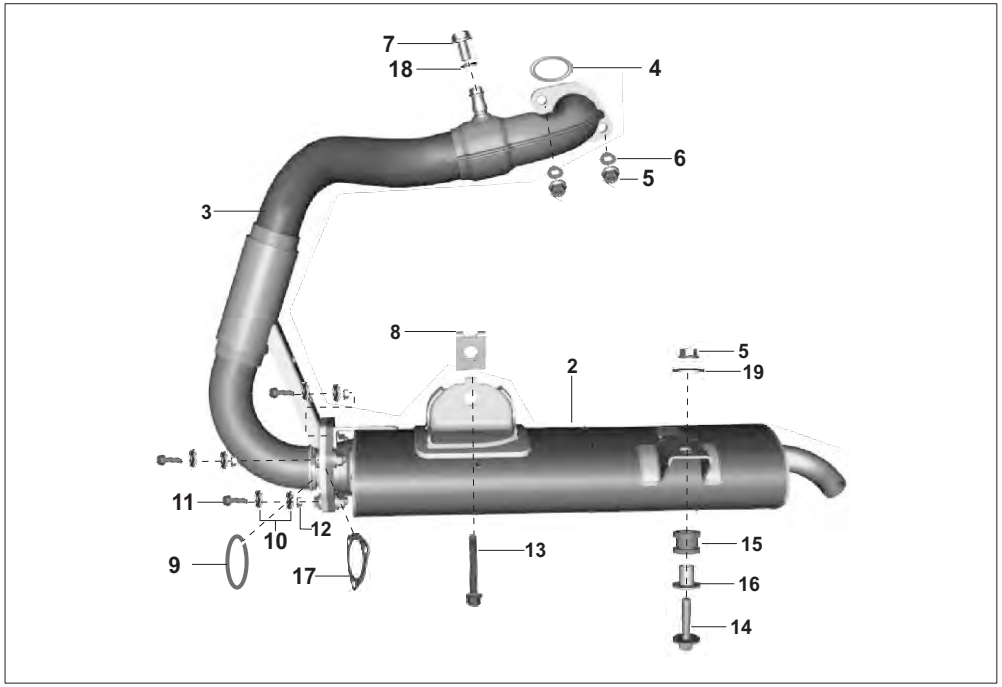

No.	Part No.	Description	LPG	PET	Remarks
1	AM 1010 51	Silencer Assembly	1	–	N.I.
	AN 1014 72	Silencer Assembly	1	1	For FL UG Model
	AN 1015 81	Silencer Assembly	–	1	Euro II
2	AM 1010 52	Muffler Assembly	1	–	
	AN 1014 74	Muffler Assembly	1	1	For FL UG Model
	AF 1014 82	Muffler Assembly	–	1	Euro II
3	AA 1019 53	Assembly Exhaust Tube	1	–	
	AN 1014 78	Pipe Assembly A	1	1	For FL UG Model
	AN 1015 82	Pipe Assembly A	–	1	Euro II
4	JE 5910 02	Gasket Exhaust	1	1	
5	KC GD08 08	Nut - Hexagon :- M8 X 1.25	3	3	
6	39 1180 11	Washer - Plain	2	2	
7	KA DD06 12	Bolt Flange Co	1	1	
8	AA 1021 14	Clip Nut	1	1	
9	JE 5910 02	Gasket Silencer	1	1	
	AP 1011 94	Gasket Silencer	–	1	Euro II
10	LD A000 28	Washer Plain	6	6	
11	LA E000 45	Bolt Flange	3	3	
12	39 2295 15	Nut Hex.	3	3	
13	LA D000 68	Bolt Flanged	1	1	

PLATE NO. 20 : SILENCER ASSEMBLY

Maxima Z LPG & Petrol

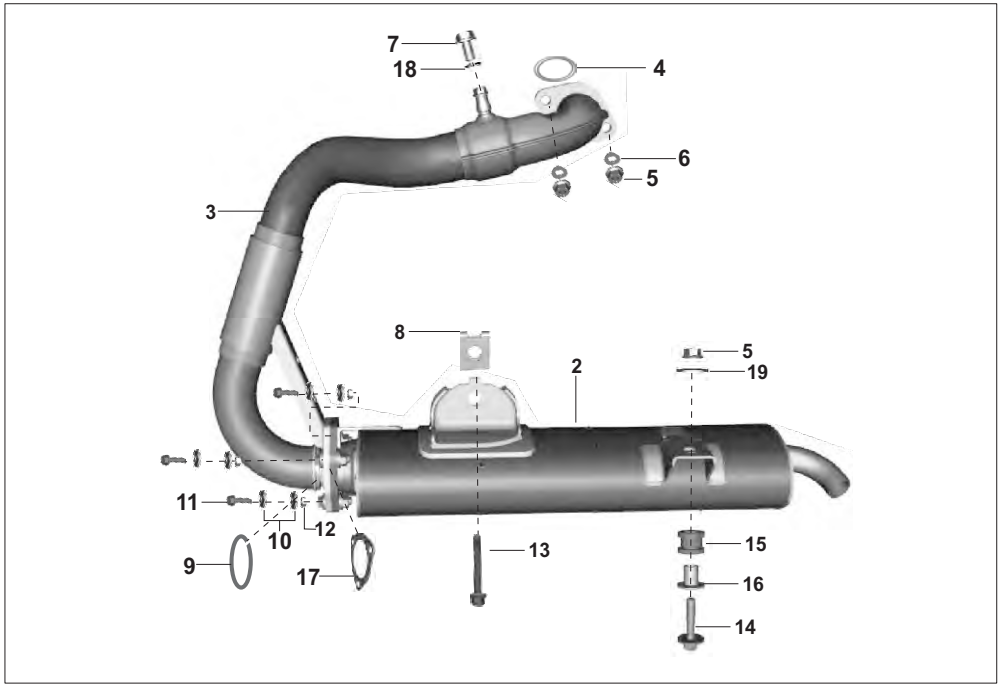

No.	Part No.	Description	LPG	PET	Remarks
14	LA G000 08	Bolt Wp	1	1	
15	AA 1021 93	Grommet	1	1	
16	AA 1021 10	Sleeve	1	1	
17	AA 1021 24	Gasket Silencer	1	1	
18	CM 1011 29	Washer - Plain	1	1	
19	39 2424 11	Plain Washer	1	1	

PLATE NO. 21 : ENGINE MOUNTING

Maxima Z LPG & Petrol

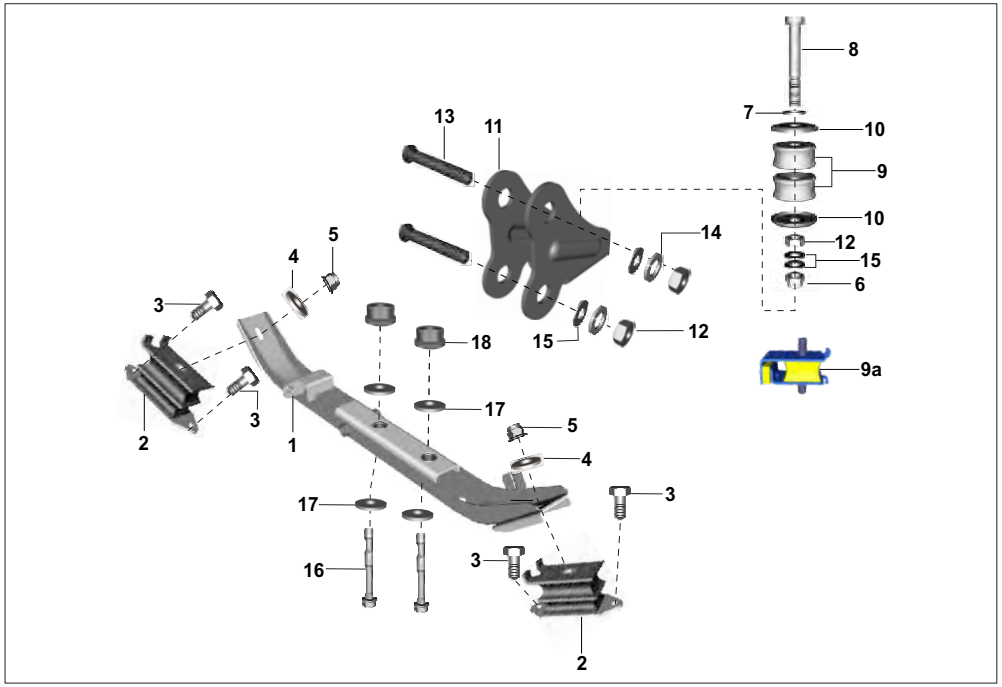

No.	Part No.	Description	LPG	PET	Remarks
1	AZ 1134 15	Member Assembly Engine Mounting	1	–	
	AZ 1134 06	Assembly Eng Mount RR Cross Mbr	–	1	
	AA 1613 83	Member Assembly Engine	1	1	For FL UG Model
2	AA 1018 16	Isolator - Rubber	2	2	
3	KA DA06 14	Bolt-Flange-kad St-a Dia-06 L-14	4	4	
4	KD BA08 18	Washer Plain	2	2	
5	KC KA08 11	Nut Nyloc Flanged	2	2	
6	59 1500 12	Nut Nyloc M10	1	1	
7	39 0251 11	Washer Plain	1	1	
8	24 1610 03	Bolt - Hexagon	1	1	
9	24 1609 24	Plug - Rubber	2	2	
9a	BH 1134 11	Rubber Isolator FL	1	1	For FL UG Model
	AF 1612 81	Isolator	1	1	Ref.Cir.IB-324
10	21 1604 17	Plate - Reinforcement	2	2	
11	AZ 1134 19	Bracket Assembly Engine Front	1	1	
	AZ 1134 50	Bracket Assembly Engine Front	1	1	For FL UG Model
12	39 0296 15	Nut - Hexagon :- M10	3	3	
13	LA D002 16	Bolt Flanged	2	2	
14	39 1829 12	Spring Washer	2	2	
15	39 0248 11	Plain Washer	5	5	

PLATE NO. 21 : ENGINE MOUNTING

Maxima Z LPG & Petrol

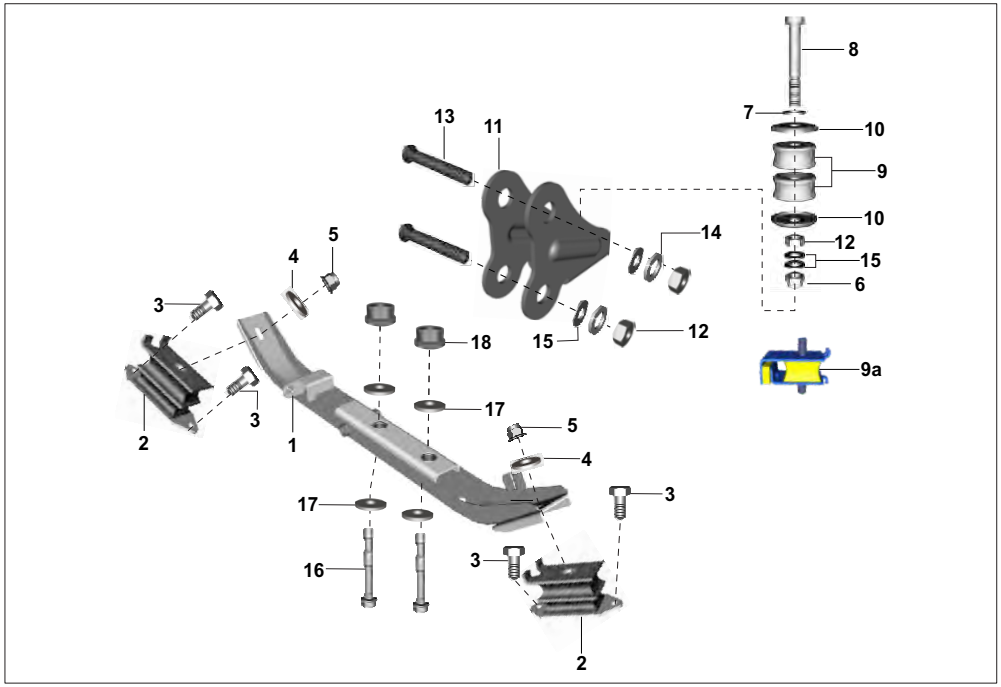

No.	Part No.	Description	LPG	PET	Remarks
16	LA D001 64	Bolt - Hexagon Head :- M10	2	2	
17	LD B000 49	Washer - Special	4	4	
18	LC G000 17	Nut Hex. Thick	2	2	

PLATE NO. 22 : CARBURETOR

Maxima Z LPG & Petrol

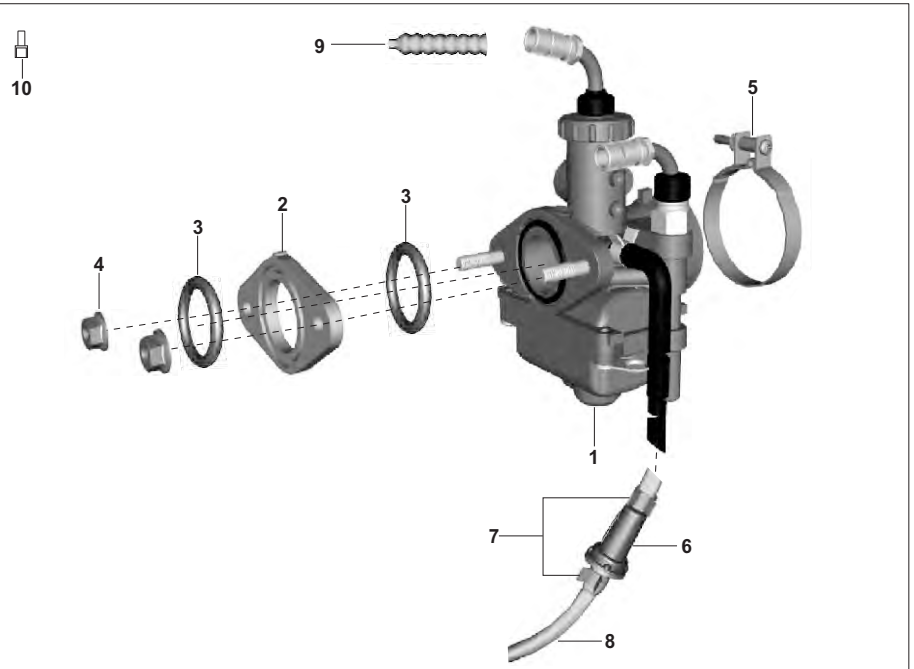

No.	Part No.	Description	LPG	PET	Remarks
1	AZ 5812 24	Carburettor	1	–	
	AY 5812 00	Carburettor	–	1	
	AY 5812 02	Carburettor	–	1	Euro II
2	AA 1212 26	Insulator For Manifold	1	1	
3	LJ A000 03	O Ring (Insulator)	2	2	
4	KC GA06 06	Nut Hex Flanged	2	2	
5	JF 5812 09	Clamp Connecting Side	1	1	
6	AF 1211 33	Filter	1	–	
7	AA 1410 46	Spring Band Clip 7.8 Mm	2	–	
8	AZ 5812 20	Tube Breather Ii	1	–	
9	31 1910 32	Boot For Accelerator Cable	2	2	
10	24 1215 08	Tube Overflow Carb.	1	1	
11	24 1213 65	Float Assembly	1	1	N.I.
12	24 1210 69	Pin Float	1	1	N.I.
13	JA 5812 21	Needle Valve Assembly	1	1	N.I.
14	36 RA00 06	Jet Kit (AZ581224)	1	–	Kit-9
	36 AY00 06	Jet Kit	–	1	
15	36 RA00 04	Piston Valve Assembly Kit	1	–	Kit-10
	36 AY00 04	Piston Valve Assembly Kit	–	1	

PLATE NO. 22 : CARBURETOR

Maxima Z LPG & Petrol

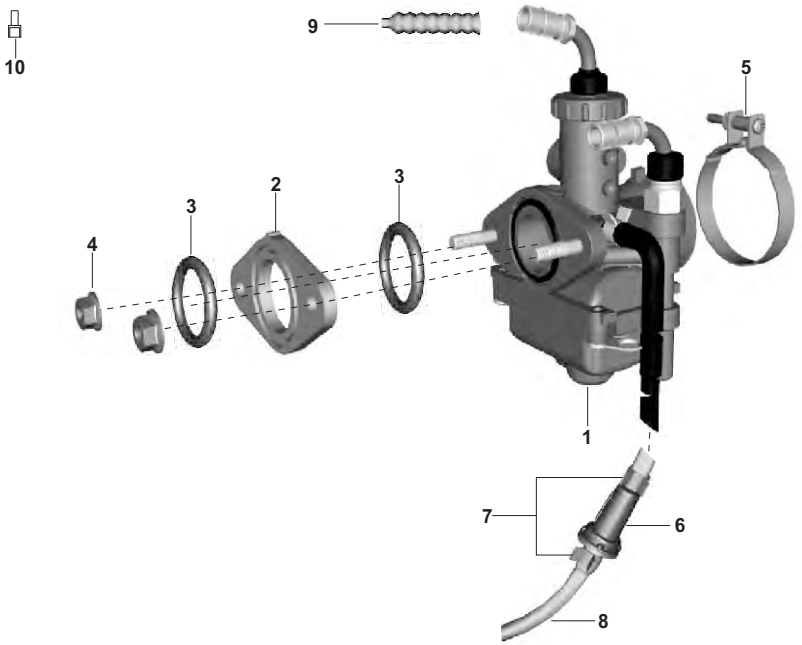

No.	Part No.	Description	LPG	PET	Remarks
16	36 RA00 07	Float Body Assembly Kit	1	–	Kit-11
	36 AA40 74	Float Body Assembly Kit	–	1	
17	36 JZ00 16	Idling Adjuster Kit	1	1	Kit-12
18	AA 1410 46	Clip Spring	1	1	NI
19	36 AA40 75	O-Ring And Gasket Kit	1	1	Kit-13
20	36 AA41 00	Starter Cable Guide Assembly Kit	1	1	Kit-14
21	36 RA00 05	Kit Pilot Screw	1	–	Kit -15
	36 AY00 05	Kit Pilot Screw	–	1	
22	JA 5812 23	Mixing Cap Assembly Kit	1	1	N.I.

PLATE NO. 23 : AIR FILTER ASSEMBLY

Maxima Z LPG & Petrol

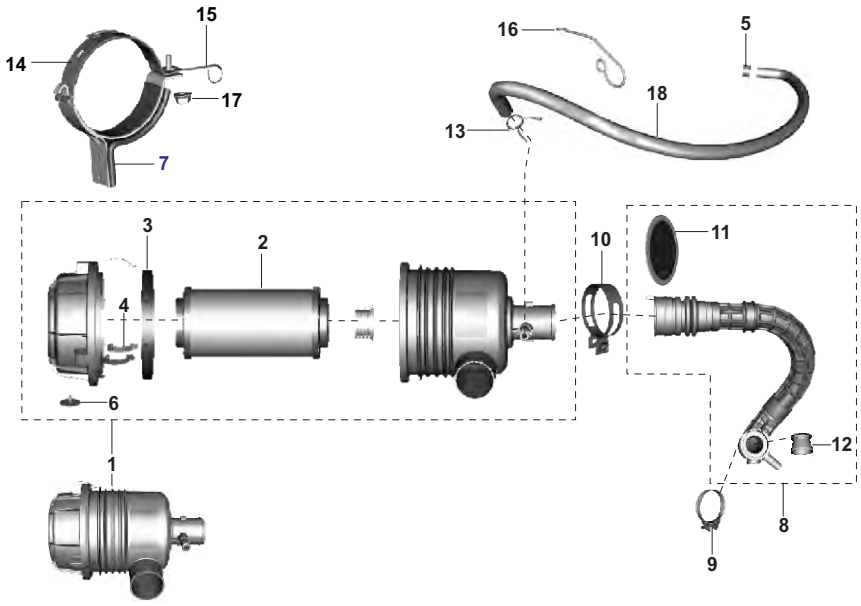

No.	Part No.	Description	LPG	PET	Remarks
1	AF 1215 05	Assembly Air Filter	1	–	
	AZ 5811 11	Filter Assembly Air	1	–	For FL UG Model
	AA 1213 05	Filter Assembly Air	–	1	
2	AA 1211 50	Element Air Filter	1	–	
	AL 1210 62	Element Air Filter	–	1	
3	AA 1211 48	Gasket Sealing	1	–	
	AL 1210 68	Seal Ring Flat	–	1	
4	AA 1211 49	Clip Air Filter	3	3	
5	24 1214 76	Spring	1	1	
6	AA 1211 47	Valve Dust Ejector	1	–	
	BB 1210 29	Flap Air Intake	–	1	
7	RC 1138 01	Assembly Air Filter Clamp	1	1	
8	RA 5810 15	Assembly Duct Integral Complete	1	–	
	AY 5810 03	Assembly Duct	–	1	
9	JF 5812 09	Clamp Connecting Side Duct	1	1	
10	JU 5810 06	Clamp Connecting Tube	1	1	
11	AZ 5810 09	Arrester Back Fire	1	1	
12	AM 1210 77	Mixer Tube (Nylon).	1	–	
13	24 1214 77	Clamp SAI Tubes	1	1	

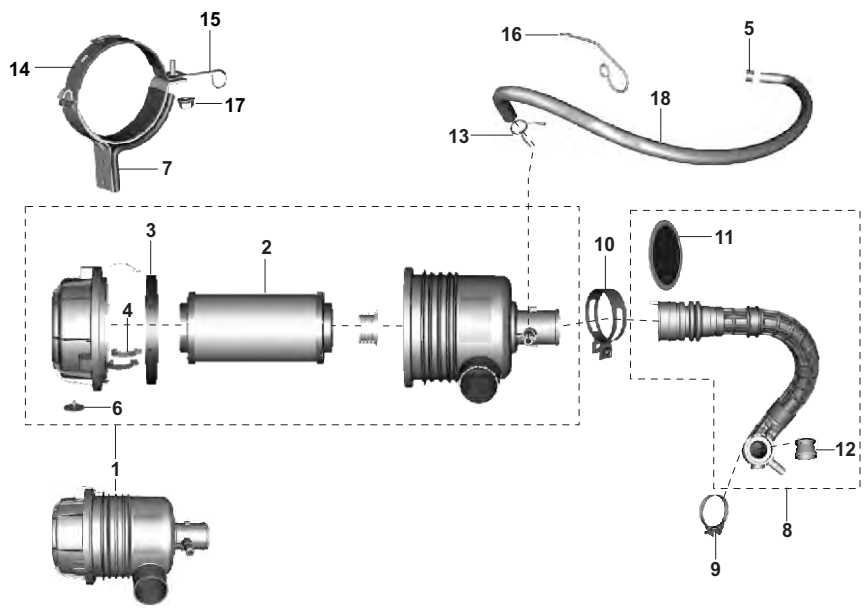

No.	Part No.	Description	LPG	PET	Remarks
14	BG 5810 06	Clamp Air Filter	1	1	
15	AZ 1718 40	Hook	1	–	
16	AA 1021 54	Hook Engine Breather Tube	1	1	
17	KC GD08 08	Nut - Hexagon With Flange - M8	1	1	
18	AZ 5810 47	Tube Breather	1	1	

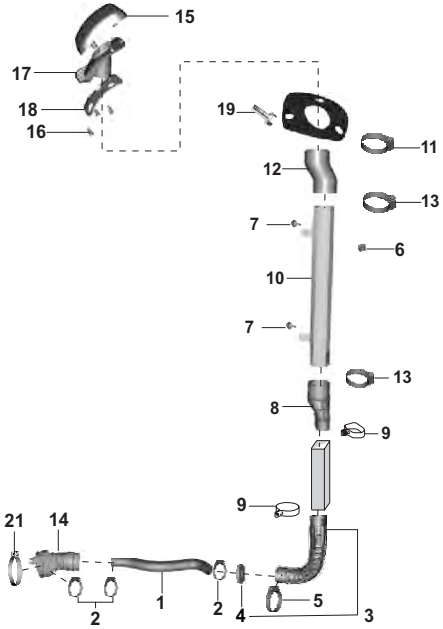

No.	Part No.	Description	LPG	PET	Remarks
1	AZ 5810 34	Pipe Air Filter Inlet	1	1	
2	DG 1012 63	Clamp	3	3	
3	AZ 5810 75	Assembly Elbow Rubber	1	1	
4	AN 1014 48	Insert Restrictor - Elbow	1	1	
5	AZ 5810 24	Clip Duct Air Body	1	1	
6	BH 5810 10	Clip Elbow Lower End	1	1	
7	KA DD06 12	Bolt - Flanged	2	2	
8	BH 5810 24	Elbow Rubber Upper	1	1	
9	BH 5810 10	Clip Elbow Lower End	2	2	
10	AZ 5810 18	Pipe Air Intake Upper	1	1	
11	31 1210 41	Clamp	1	1	
12	BH 5810 25	Elbow Rubber Top	1	1	
13	24 1704 31	Clip - Hose	2	2	
14	AZ 5810 33	Assembly Bellow Pipe A/F Inlet	1	1	
15	AZ 1850 01	Grill Air Intake Snorkel Top	1	1	
16	JG 5810 15	Insert (M6*1)	3	3	
17	AZ 1850 02	Grill Air Intake Snorkel Btm	1	1	
18	AZ 1850 03	Packing Snorkel Cover UG	1	1	
19	KA DD06 20	Bolt-Flange-kad St-d Dia-06 L-20	3	3	

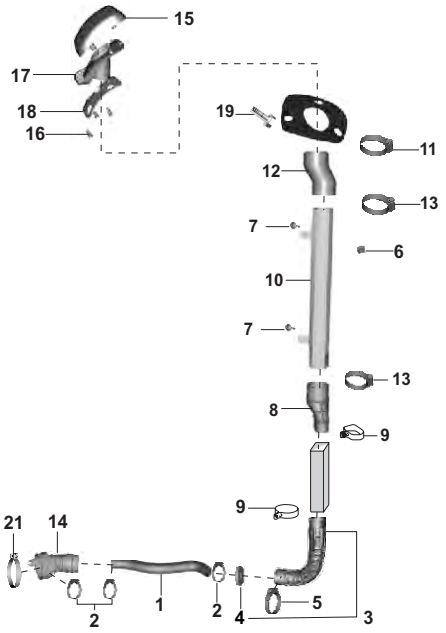

No.	Part No.	Description	LPG	PET	Remarks
20	KA ED06 18	Bolt - Flanged-Small	1	1	N.I.
21	31 1210 41	Clamp	1	1	

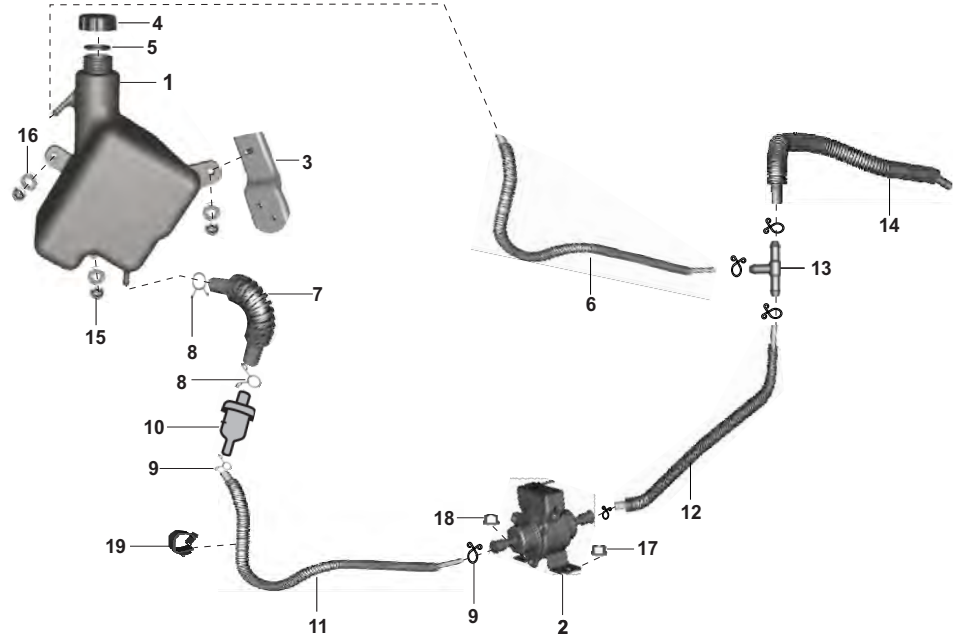

No.	Part No.	Description	LPG	PET	Remarks
1	AZ 1718 39	Assembly Tank Fuel Limphome Ug	1	–	
2	AL 2010 34	Pump Assembly - Fuel	1	–	
3	AZ 1710 09	Assembly Sup Bkt Limp Home Tank	1	–	
4	AZ 1710 06	Assembly Cap Fuel Tank Ug	1	–	
5	CS 1410 05	Washer Cap Fuel Tank	1	–	
6	AZ 1718 22	Assembly Pipe Fuel Return Ug	1	–	
7	AZ 1718 19	Assembly Pipe Fuel Tank To Filter	1	–	
8	33 1410 07	Clamp	4	–	
9	33 1410 08	Clamp	6	–	
10	DD 1210 13	Filter - Fuel	1	–	
11	AZ 1718 20	Assembly Pipe Fuel Filter To Pump	1	–	
12	AZ 1718 21	Assembly Pipe Fuel Pump To T Joint	1	–	
13	AZ 1718 11	Joint T	1	–	
14	AZ 1718 27	Assembly Pipe T Joint To Carburettor	1	–	
15	KC GA06 06	Nut Hex Flanged	3	–	
16	KD BA08 18	Washer Plain	3	–	
17	KC GD06 06	Nut Hex Flanged	1	–	
18	KC GD08 08	Nut Hex Flanged	1	–	
19	BF 1721 26	Clamp Hose	1	–	

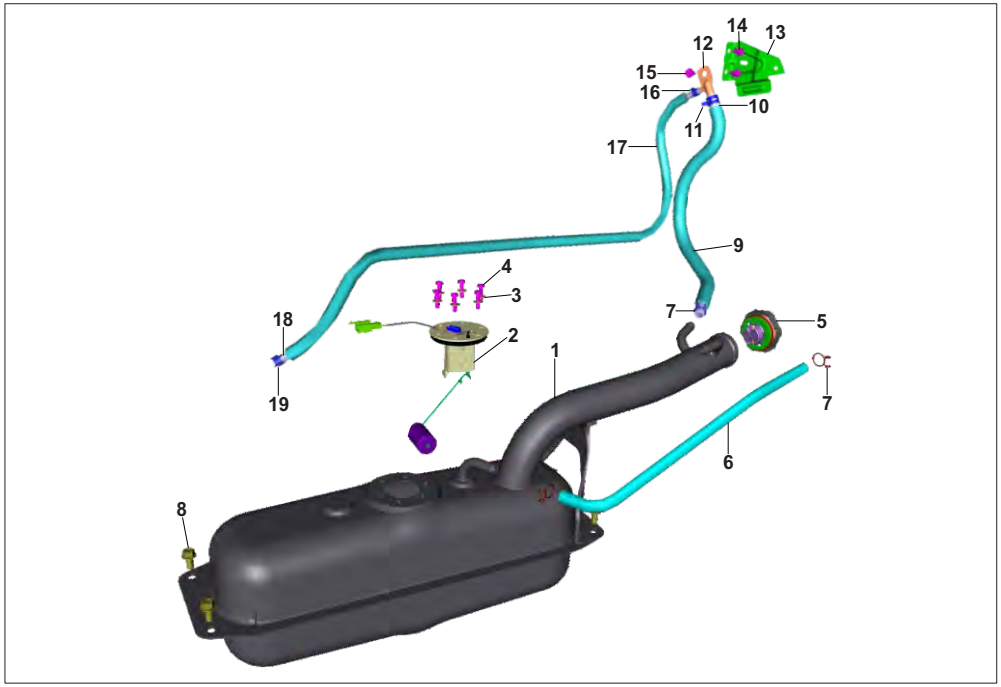

No.	Part No.	Description	LPG	PET	Remarks
1	AY 1710 05	Tank Assembly Fuel	–	1	
2	BH 4026 07	Assembly Fuel Tank Unit Ug	–	1	
3	KD BA05 12	Washer Plain	–	6	
4	KA AA05 18	Bolt	–	6	
5	AA 1411 15	Assembly Fuel Cap With Handle	–	1	
6	BH 1718 13	Pipe Fuel Breather Ug	–	1	
7	24 1214 77	Clamp Hose	–	3	
8	KA DD08 16	Bolt-Flange-kad St-d Dia-08 L-16	–	4	
9	BH 1718 14	Sleeve Joint L-Tank	–	1	
10	AY 1718 16	Pipe Joint L-Tank	–	1	
11	BF 1318 87	Clamp	–	1	
12	AN 1411 37	Joint L	–	1	
13	AZ 2113 47	Bracket Assembly Joint	–	1	
14	KA DA06 10	Bolt-Flange-kad St-a Dia-06 L-10	–	2	
15	LA D000 72	Bolt Flanged-m6x1xl9xsteppedxblk	–	1	
16	JG 1710 29	Spring Band Clamp 11.5 X 8.4	–	5	
17	AT 1720 55	Sleeve-t Joint To Carburettor	–	1	
18	AY 1718 15	Pipe Joint T-Joint L	–	1	
19	JY 1710 70	Spring Band Clamp 10.5 X 8.4	–	5	

PLATE NO. 26 : FUEL TANK - PETROL
Maxima Z LPG & Petrol

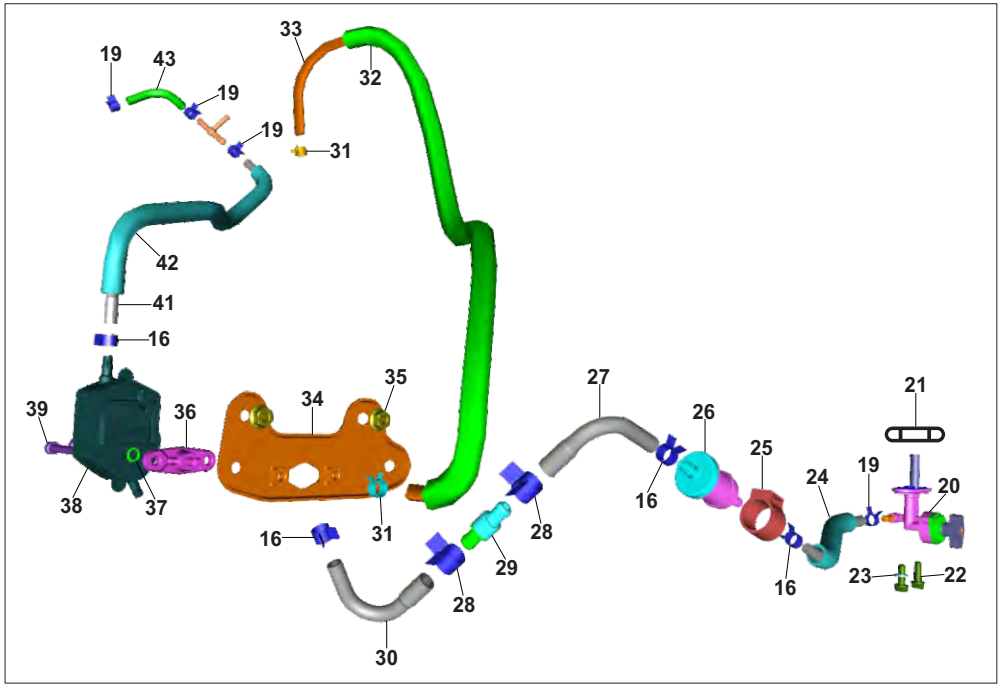

No.	Part No.	Description	LPG	PET	Remarks
20	AY 1718 12	Tap Fuel	–	1	
21	JL 1710 96	Gasket Fuel Cock	–	1	
22	DD 1412 27	Bolt - Flanged Head+Philips Head Socket	–	2	
23	39 0740 11	Washer (Non-Metallic)	–	2	
24	AY 1718 11	Pipe Assembly Tank-Filter	–	1	
25	GF 1410 20	Holder - Filter Fuel	–	1	
26	GF 1410 27	Filter Fuel	–	1	
27	AY 1718 14	Pipe Filter Fuel-nrv	–	1	
28	JY 1710 90	Spring Band Clamp 13x12	–	2	
29	AY 1718 13	Valve Non Return	–	1	
30	AY 1718 03	Pipe Nrv-Pump Fuel	–	1	
31	24 1213 33	Clamp	–	2	
32	AA 1410 98	Sleeve Filter To Carburettor	–	1	
33	AY 1710 09	Tube Vacuum-Pump Fuel	–	1	
34	AN 1212 52	Bracket Pump Fuel	–	1	
35	KC GD06 06	Nut Hex Flanged	–	2	
36	AN 1212 59	Spacer Assembly Pump Fuel	–	1	
37	LJ A000 24	Ring O-id 6.3 X Sect. Dia. 1.9	–	1	
38	AY 1718 18	Pump Fuel Vacuum	–	1	

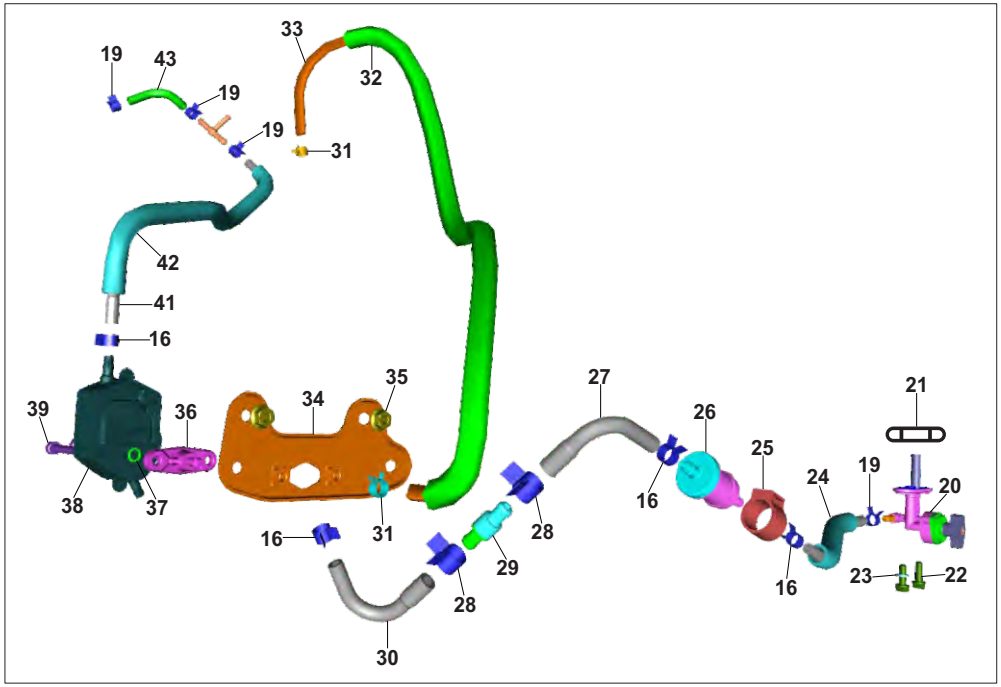

No.	Part No.	Description	LPG	PET	Remarks
39	KA CA06 45	Bolt Master Kac	–	2	
40	AY 1718 06	Pipe Pump-Joint T	–	1	N.I.
41	AY 1718 07	Assembly Pipe Pump-Carburettor	–	1	
42	AZ 1718 08	Joint T	–	1	
43	AA 1410 85	Pipe Tank To Filter	–	1	

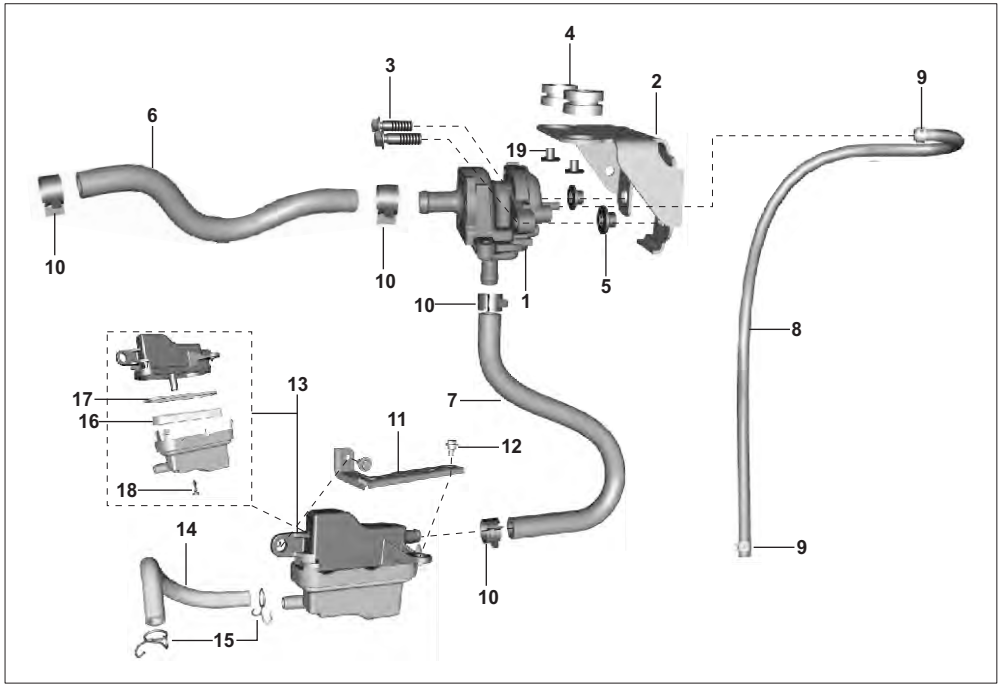

No.	Part No.	Description	LPG	PET	Remarks
1	PD 5822 00	Unit SAI	1	–	For Non UG Model
2	AZ 5822 00	Bracket For SAI Unit Mtg	1	–	For Non UG Model
3	KA ED06 20	Bolt-Flange	2	–	For Non UG Model
4	DG 1410 19	Damper	2	–	For Non UG Model
5	PA 1112 50	Coll Special	2	–	For Non UG Model
6	AZ 5824 00	Tube SAI Inlet-1	1	–	For Non UG Model
7	AA 1212 82	Tube SAI Outlet	1	–	For Non UG Model
8	AA 1212 91	Tube Vacuum	1	–	For Non UG Model
9	24 1213 33	Clip For Vacuum Hose	2	–	For Non UG Model
10	24 1214 76	Spring Clamp Dia. 16.8 X W12	4	–	For Non UG Model
11	AA 1021 51	Bracket SAI Filter Mounting	1	–	For Non UG Model
12	DS 1612 24	Bolt - Stepped With Flange	2	–	For Non UG Model
13	JE 5826 04	Assembly SAI Filter D106a	1	–	For Non UG Model
14	AN 1212 42	Tube -Inlet-SAI Filter	1	–	For Non UG Model
15	DG 1210 40	Clamp	2	–	For Non UG Model
16	JE 5826 03	Foam SAI Filter D106a	1	–	For Non UG Model
17	JE 5826 02	Ring-O SAI Filter D106a	1	–	For Non UG Model
18	KB RA48 19	Screw Tapping Pan Cross	1	–	For Non UG Model
19	30 2110 05	Collar	2	–	For Non UG Model

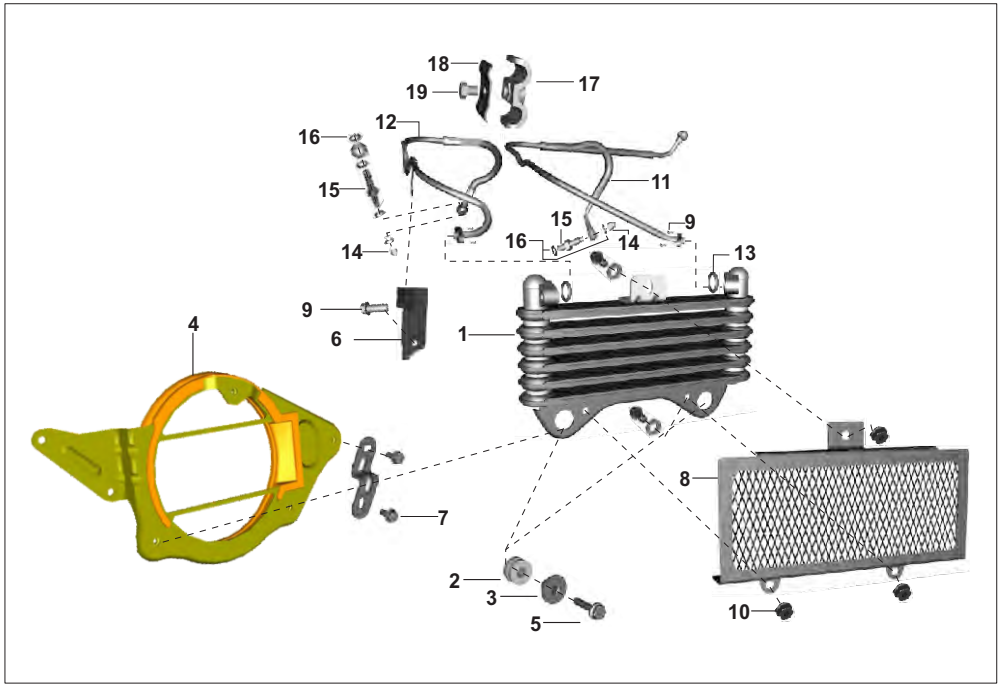

No.	Part No.	Description	LPG	PET	Remarks
1	AZ 5712 26	Cooler Oil	1	1	
2	AZ 5712 12	Grommet	2	2	
3	AZ 5712 13	Collar	2	2	
4	AZ 5712 00	Bracket Oil Cooler Mtg With Bellow	1	–	
	AZ 5712 28	Bracket Assembly Cooler Oil	–	1	
5	KA ED06 25	Bolt-Flange-kae St-d Dia-06 L-25	3	3	
6	AN 1013 34	Bracket Support-Oil Tube	1	1	
7	KA DD06 12	Bolt Flanged	2	2	
8	AZ 5712 27	Guard Cooler Oil	1	1	
9	39 1672 04	Bolt - Flange :- M6 X 16	6	6	
10	39 1630 15	Nut - Hexagon With Flange	1	1	
11	AZ 5712 19	Pipe Assembly Oil Hot	1	1	
	AZ 5712 32	Pipe Assembly Oil Hot	1	1	For FL UG Model
12	AZ 5712 20	Pipe Assembly Oil Cool	1	1	
	AZ 5712 31	Pipe Assembly Oil Cool	1	1	For FL UG Model
13	DK 1013 40	'O' Ring (Oil Cooler Pipe)	2	2	
14	AN 1011 13	Nut-Domed Cap	2	2	
15	AA 1018 26	Connector-Oil Supply	2	2	
16	DK 1012 37	Washer Copper	6	6	

PLATE NO. 28 : OIL COOLER ASSEMBLY
Maxima Z LPG & Petrol

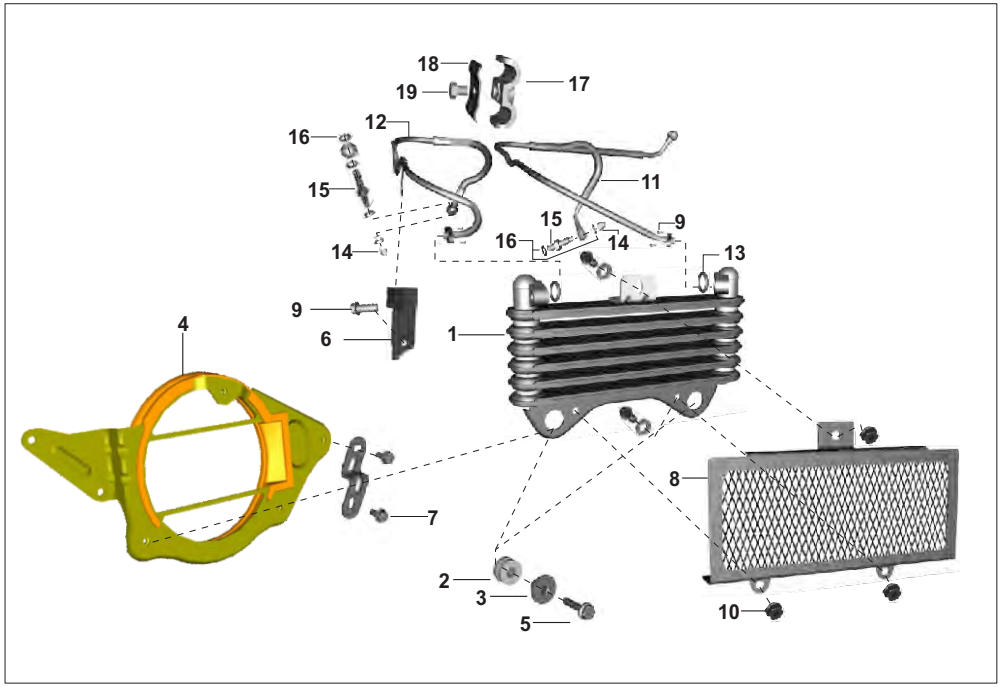

No.	Part No.	Description	LPG	PET	Remarks
17	DK 1012 77	Bracket Upper (Oil Cooler Pipe)	2	2	
18	DK 1012 78	Bracket Lower (Oil Cooler Pipe)	2	2	
	AF 1017 43	Bracket Pipe Cooler Oil	2	2	Ref.Cir.IB-335
19	LA E000 19	Bolt Flanged M5x0.8px8l	2	2	
	KA DD05 14	Bolt-Flange-kad St-d Dia-05 L-14	2	2	Ref.Cir.IB-335

PLATE NO. 29 : CV SHAFT

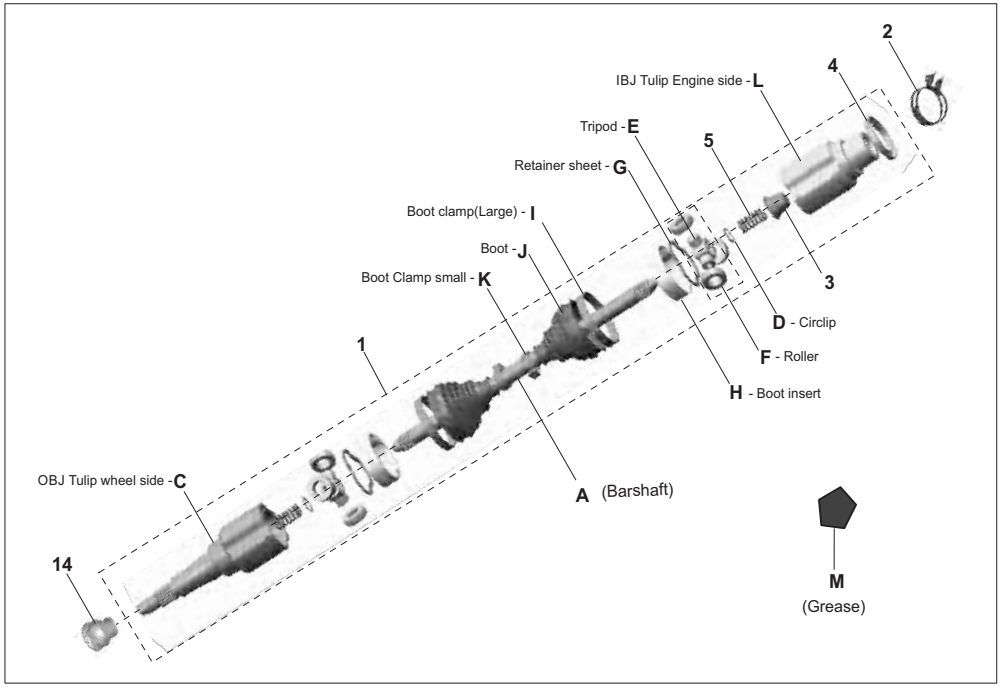

No.	Part No.	Description	LPG	PET	Remarks
1	AZ 1412 21	Assembly Drive Shaft	2	2	
2	BH 5518 00	Clip Lock Drive Shaft	2	2	
3	BH 5514 20	Plug	1	1	
4	BH 5514 21	Dust Shield	1	1	
5	BH 5514 09	Spring	2	2	
6	36 BH00 36	Kit Boot- All K-tek	4	4	J,I,K,M
7	36 BH00 37	Kit Boot & Retainer K-tek	4	4	J,I,K,M,G,H
8	36 BH00 08	Kit Obj Max	2	2	C,I,K,M
9	36 BH00 10	Kit Obj & Tripod Max	2	2	C,I,K,M,E,F,D
10	36 BH00 30	Kit Ibj	2	2	L,I,K,M
11	36 BH00 31	Kit Ibj & Tripod	2	2	L,I,K,M,E,F,D
12	36 AZ00 23	Kit Bar Shaft K-tek	2	2	A,D,I,K
13	36 BH00 19	Kit Roller	2	2	F
14	BF 1317 07	Nut Axle M16	2	2	

PLATE NO. 30 : TRAILING ARM / RR SH. ABS

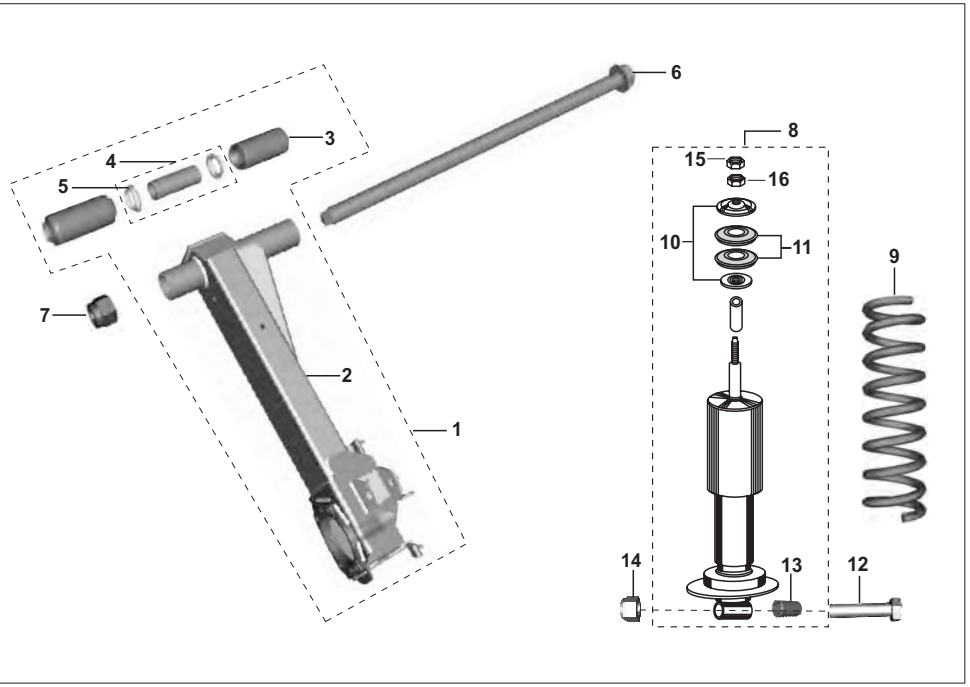

No.	Part No.	Description	LPG	PET	Remarks
1	BH 1220 40	Assembly Trailing Arm RH	1	1	
	AZ 1220 33	Assembly Arm Trailing RH	1	1	For FL UG Model
2	BH 1220 39	Assembly Trailing Arm LH	1	1	
	AZ 1220 32	Assembly Arm Trailing LH	1	1	For FL UG Model
3	AZ 1220 05	Bush Silent Ta	4	4	
4	AZ 1220 07	Assembly Dist Piece Ta Tube	2	2	
5	BH 1220 28	Spacer Ring Ta Igus	4	4	
6	AZ 1220 16	Bolt Flanged	2	2	
7	KC HA14 17	Nut -Nyloc :- M14 X 1.5	2	2	
8	AZ 1220 08	Shock Absorber Rear Suspension	2	2	
9	AZ 1220 09	Spring Rear Suspension	2	2	
10	BA 1710 08	Cup Washer Top Side	4	4	
11	BA 1710 07	Rubber Bush - Cup Washer	4	4	
12	24 1705 07	Bolt	2	2	
13	BB 1710 36	Bush RR Shocker Pre Compressed	2	2	
14	39 2607 15	Nut Ylock	2	2	
15	KC BD10 06	Nut Hex Thin	2	2	
16	KC AD10 08	Nut Hex Thick	2	2	

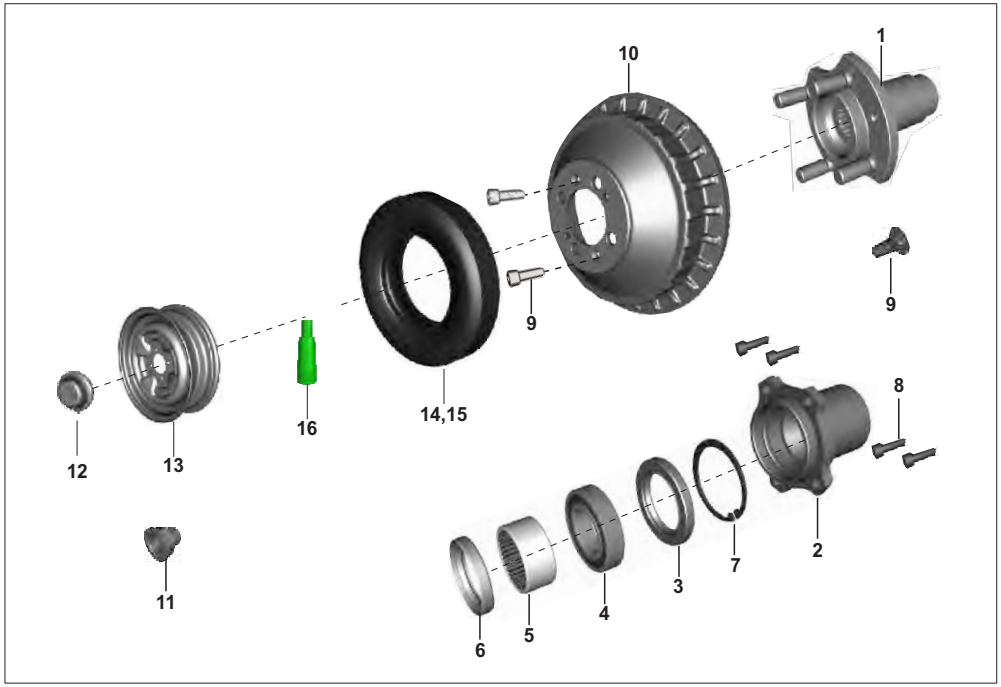

No.	Part No.	Description	LPG	PET	Remarks
1	BH 1312 17	Assembly Drive Flange	2	2	
2	BH 1312 20	Hub Rear	2	2	
3	BF 1317 23	Seal 41x60x7	2	2	
4	BF 1317 22	Bearing 30x55x13-Rear Hub	2	2	
5	59 2000 12	Bearing - Needle (sl 35 20)	2	2	
6	22 1710 07	Seal - Oil	2	2	
7	KE BB55 20	Internal Circlip	2	2	
8	LA C000 35	Bolt-Socket-m8	8	8	
9	KB CA06 14	Screw Csk Cross	4	4	
10	BH 1310 23	Drum Brake	2	2	
	AZ 1316 01	Drum Brake	2	2	For FL UG Model
11	BF 1317 07	Nut Axle M16	2	2	
12	BH 1312 06	Cap Hub Rear Fl	1	1	
13	AZ 1310 04	Assembly Wheel Rim	4	4	
	AZ 1310 15	Wheel 3.00bx10h2	4	4	Ref.Cir.IB-340
14	BH 1310 10	Tyre With Tube 6-PR	4	4	
15	BH 1310 09	Tyre 4.00-10	4	4	
	BH 1310 29	Tyre 4.00-10 Tubeless	4	4	Ref.Cir.IB-340
16	BF 1314 17	Valve V2.03.4	4	4	Ref.Cir.IB-340

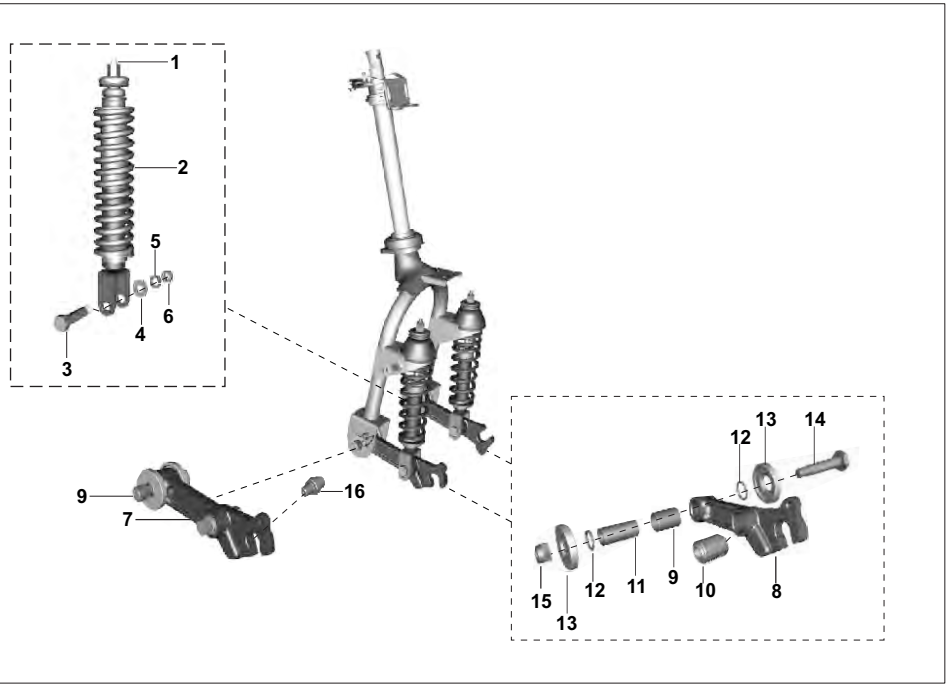

No.	Part No.	Description	LPG	PET	Remarks
1	BH 1210 04	Assembly Front Damper	2	2	
2	BH 1210 05	Spring Front Suspension	2	2	
3	39 2516 04	Shoulder Bolt	2	2	
4	39 1054 11	Plain Washer	2	2	
5	39 0789 12	Spring Washer	2	2	
6	39 0296 15	Hexagon Nut	2	2	
7	AL 1710 93	Link-RH Assembly	1	1	
8	AL 1710 91	Link-LH Assembly	1	1	
9	AL 1710 95	Bearing Sleeve-Igus Bush	2	2	
10	AB 1710 16	Bush	2	2	
11	AL 1710 81	Bush Link Pivot	2	2	
12	LJ A000 25	O Ring Fr.15.05.2018	4	4	
13	AL 1711 04	Cap Link Pivot	4	4	
14	AL 1710 51	Bolt For Link Pivot	2	2	
15	39 0939 15	Hex Nyloc Nut	2	2	
16	AL 1710 58	Locking Pin	2	2	

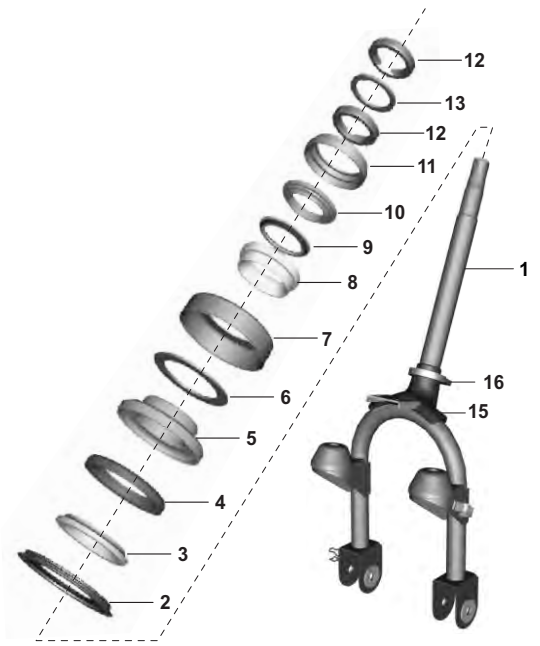

No.	Part No.	Description	LPG	PET	Remarks
1	BH 1510 62	Fork Assembly	1	1	
2	BH 1510 07	Cover Dust Lower	1	1	
3	AA 1810 22	Bearing Race Lower	1	1	
	BH 1510 97	Race Inner Lower	1	1	For FL UG Model
4	AB 1810 12	Ball - Steel With Cage - Lower :- Nylon	1	1	
5	AB 1810 33	Race -Bearing:Lower-Outer(Thick. 4.5 Mm)	1	1	
	BH 1510 96	Race Outer Lower	1	1	For FL UG Model
6	BH 1510 09	Spacer Fork Front	1	1	
7	BH 1510 08	Dust Cover Top	1	1	
8	BB 1810 36	Race Bearing Upper-Outer	1	1	
9	BB 1810 35	Ball With Cage-Solid Oil	1	1	
10	BB 1810 34	Race Bearing Upper-inner	1	1	
11	24 1614 43	Dust Cover	1	1	
	BH 1510 94	Cover Bearing Upper	1	1	For FL UG Model
12	24 1810 47	Lock Nut	2	2	
13	AB 1810 20	Spacer Washer Bearing	1	1	
14	BH 1510 65	Steering Plate Upper	1	1	N.I.
15	BH 1110 56	Rubber Flap	1	1	
16	BH 1210 02	Strap Cable (210x6)	1	1	

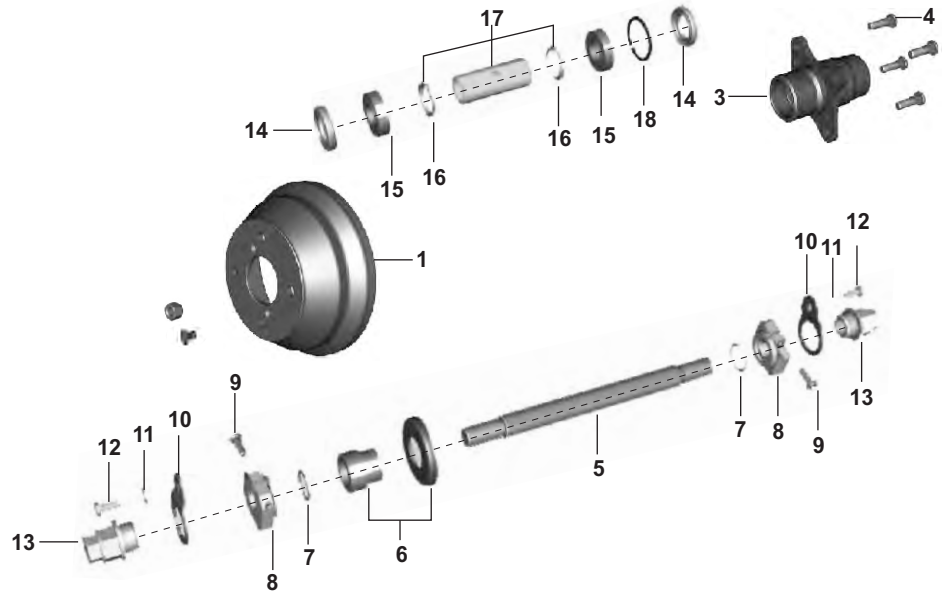

No.	Part No.	Description	LPG	PET	Remarks
1	BH 1310 23	Drum Brake	1	1	
	AZ 1316 01	Drum Brake	1	1	For FL UG Model
2	KB CA06 14	Screw Csk Cross	2	2	N.I.
3	BH 1310 21	Hub Front	1	1	
4	BF 1317 10	Bolt M10	4	4	
5	AP 1510 02	Front Wheel Axle	1	1	
6	BH 1316 00	Spacer Assembly	1	1	
7	KJ AA20 24	O-Ring	2	2	
8	AL 1510 89	Special Nut-m16	2	2	
9	39 2038 04	Hex Socket Head Bolt	4	4	
10	AL 1510 12	Locking Clip	2	2	
11	39 0732 12	Washer - Spring	2	2	
12	39 1079 01	Hex Head Screw	2	2	
13	AL 1510 11	Collar Nut	2	2	
14	39 1737 19	Oil Seal 26x42x8	2	2	
15	KP BC60 04	Bearing-Ball-C3 Clearance	2	2	
16	AL 1510 07	Collar	1	1	
17	BH 1310 24	Tube Assembly	1	1	
18	39 2464 17	Circlip	1	1	

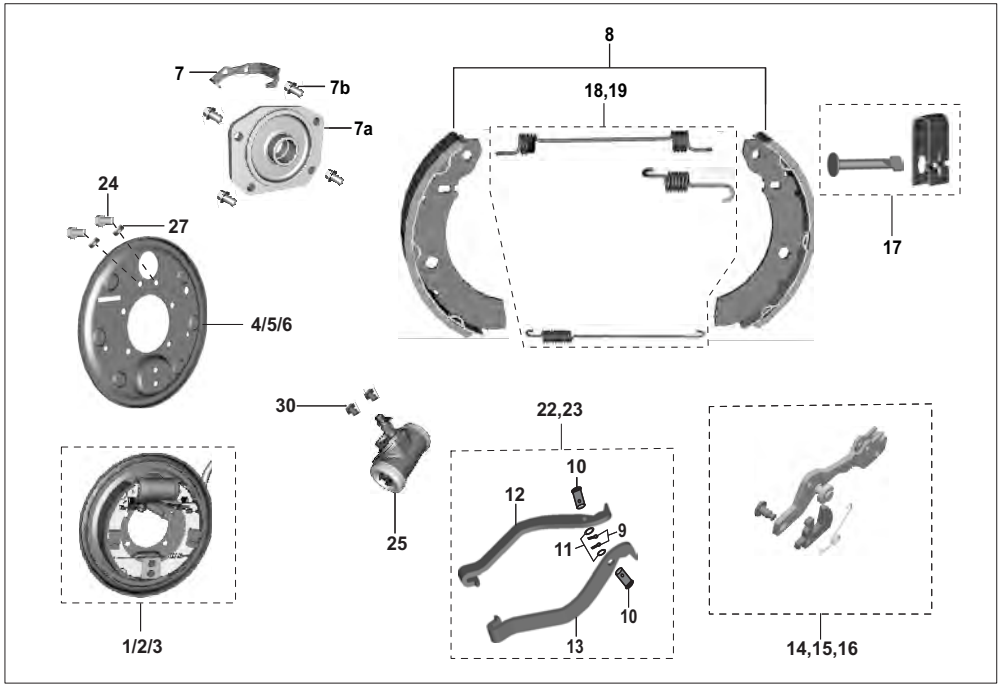

No.	Part No.	Description	LPG	PET	Remarks
1	BH 1310 06	Panel Assembly Front	1	1	
	AZ 1318 34	Panel Assembly Brake Front	1	1	For FL UG Model
2	BH 1312 13	Panel Assembly RH	1	1	
	AZ 1318 36	Panel Assembly Brake Rear RH	1	1	For FL UG Model
3	BH 1312 12	Panel Assembly LH	1	1	
	AZ 1318 35	Panel Assembly Brake Rear LH	1	1	For FL UG Model
4	AP 1510 17	Back Panel Assembly Front	1	1	
	YA Z080 03	Back Plate Front	1	1	For FL UG Model
5	24 1511 74	Back Plate Assembly LH	1	1	
	AZ 1318 35	Panel Assembly Brake Rear LH	1	1	For FL UG Model
6	24 1511 78	Back Panel Assembly RH	1	1	
7	BH 1310 11	Bracket Hose Guide Front	1	1	
	24 1512 45	Bracket Hose Guide Front	1	1	For FL UG Model
7a	AP 1510 31	Flange Backplate Front	1	1	
8	24 1511 71	Kit Brake Shoe	3	3	
	36 AZ00 76	Brake Shoe With Hbl LH Kit	1	1	For FL UG Model
	36 AZ00 78	Brake Shoe With Hbl RH Kit	1	1	For FL UG Model
9	24 1511 47	Pin Split - Hbl	2	2	
	KH AA25 12	Pin Cotter-dia.	1	1	For FL UG Model
10	24 1511 46	Pin Pivot-Park Lever	1	1	
11	24 1511 48	Washer- Plain Park Lever	1	1	
12	BH 1318 13	Lever Parking Brake LH	1	1	
13	BH 1318 14	Lever Parking Brake RH	1	1	

PLATE NO. 35 : AUTO ADJUSTER BRAKE SYSTEM | Maxima Z LPG & Petrol

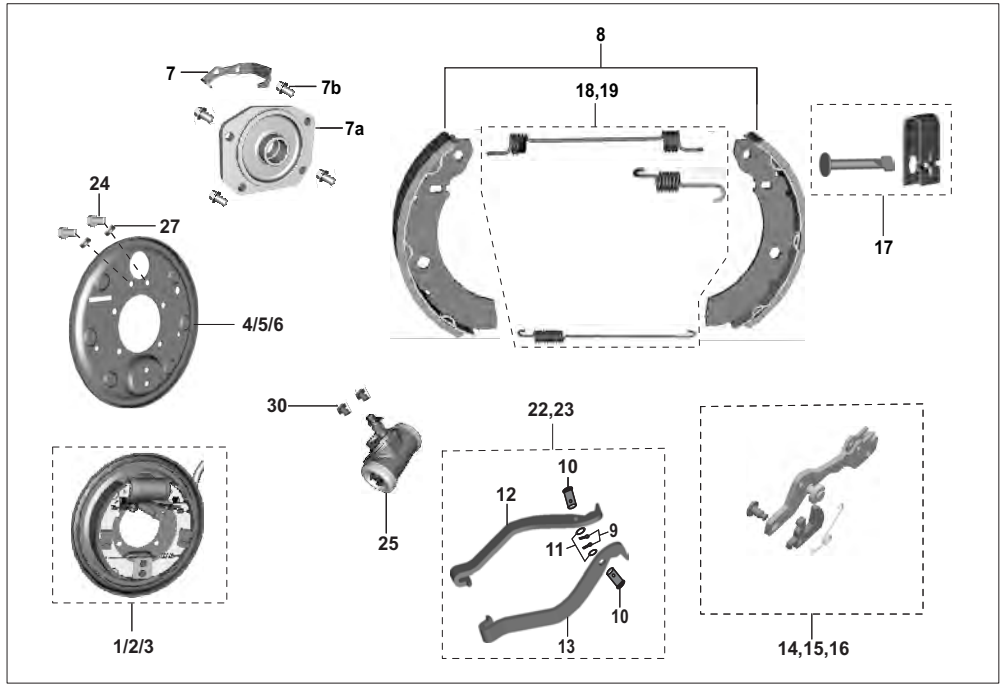

No.	Part No.	Description	LPG	PET	Remarks
14	24 1511 79	Assembly Auto Adjuster RH	1	1	
	YA Z080 09	Assly. Auto Adjuster RH	1	1	For FL UG Model
15	24 1511 75	Assembly Auto Adjuster LH	1	1	
	YA Z080 08	Assly. Auto Adjuster LH	1	1	For FL UG Model
16	24 1511 68	Assembly Auto Adjuster Front	1	1	
17	24 1511 72	Shoe Clamp Spring Kit	3	3	
18	24 1511 82	Spring Kit RH	3	3	
	36 AH00 04	Spring Kit RH	3	3	For FL UG Model
19	24 1511 73	Spring Kit FR/LH	3	3	
	36 AH00 03	Spring Kit FR/LH	3	3	For FL UG Model
20	24 1511 70	Ratchet Kit For FR & LH	2	2	N.I.
21	24 1511 81	Ratchet Kit RH	1	1	N.I.
22	24 1511 77	Kit Parking Lever LH	1	1	
23	24 1511 83	Kit Parking Lever RH	1	1	
24	AL 1510 54	Bolt	2	2	
25	24 1511 64	Wheel Cylinder Assembly	3	3	
	YA Z080 12	Wheel Cylinder Assembly	3	3	For FL UG Model
26	36 BA40 14	Wheel Cylinder Mtg Kit	1	1	N.I.
	36 AH00 10	Wheel Cylinder Mtg Kit -fr	1	1	For FL UG Model
27	AL 1510 53	Washer Spring	2	2	
28	24 1511 13	Major Kit RR	3	3	N.I.
	36 AA41 43	Wheel Cylinder Major Kit	3	3	For FL UG Model
29	24 1511 14	Minor Kit RR	3	3	N.I.
	36 AH00 11	Wheel Cylinder Minor Kit	3	3	For FL UG Model
30	AB 1510 79	Screw - Bleeder	1	1	
31	AL 1510 52	Cap - Bleeder 64	1	1	N.I.

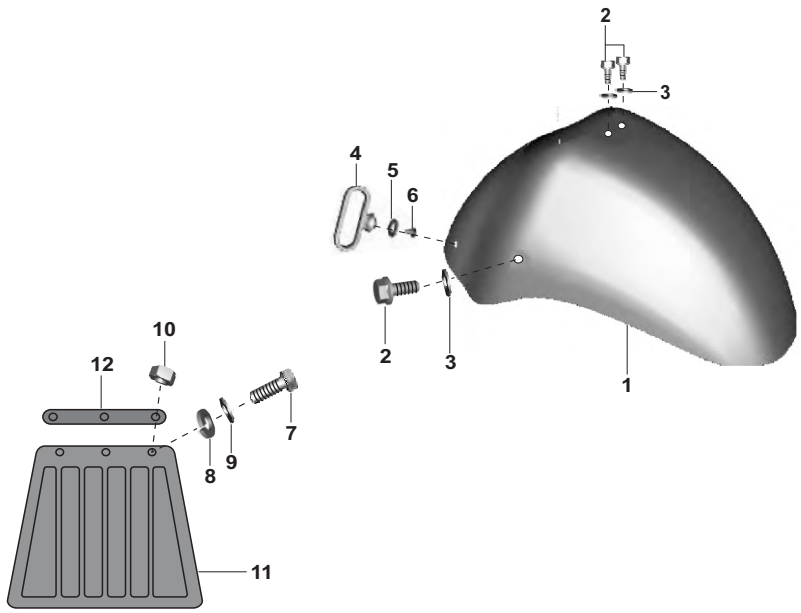

No.	Part No.	Description	LPG	PET	Remarks
1	52 BB00 75	Mudguard Front BB161099	1	1	
2	39 1944 04	Bolt	4	4	
3	39 1211 11	Washer Plain	4	4	
4	DS 1611 25	Cable Guide	1	1	
5	BH 1318 17	Spacer Guide Hose	1	1	
6	BF 1850 19	Clip Plastic Rivet	1	1	
7	39 0071 04	Screw	3	3	
8	39 1830 12	Washer Spring	3	3	
9	39 0198 11	Washer Plain	3	3	
10	39 0291 15	Nut Flange	3	3	
11	BB 2210 15	Mud Flap Front	1	1	
12	24 1611 76	Strip	2	2	

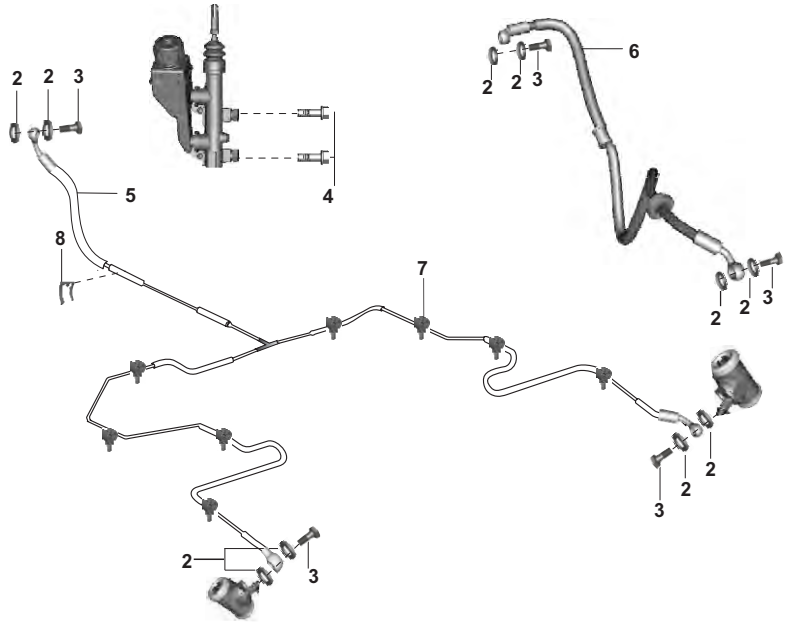

No.	Part No.	Description	LPG	PET	Remarks
1	AZ 1318 09	Pipe Assembly Brake Rear	1	1	N.I.
2	21 1504 22	Packing - Copper Washer	8	8	
3	AB 1510 49	Bolt - M10 X 1 :- Banjo, Brake	5	5	
4	KA DD10 30	Bolt-Flange-Tmc Mounting	2	2	
5	24 1512 34	Hose Rear Circuit-1	1	1	
6	BH 1318 04	Hose Brake Front	1	1	
7	BG 1138 04	Clamp Brake Pipe	6	6	
8	EC 1318 35	Clip Hose	1	1	

PLATE NO. 38 : TANDEM MASTER CYLINDER

Maxima Z LPG & Petrol

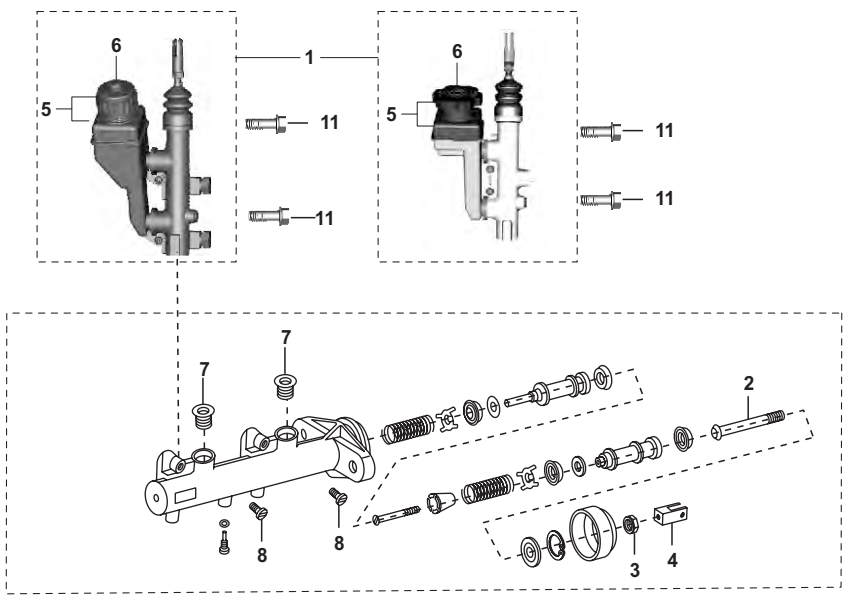

No.	Part No.	Description	LPG	PET	Remarks
1	24 1512 91	Cylinder Assembly Tandem Master	1	1	
2	24 1510 87	Rod : Push TMC	1	1	
3	24 1510 94	Hex. Nut	1	1	
4	24 1510 90	Fork Rod Push	1	1	
5	24 1512 90	Assembly Brake Reservoir	1	1	
	24 1512 99	Reservoir Oil Brake	1	1	For FL UG Model
6	24 1512 89	Cap Assembly Reservoir Wo Lis	1	1	
7	24 1510 92	Seal-Oil Supply Port	2	2	
8	24 1510 93	Screw Reservoir Mtg.	2	2	
9	24 1510 97	Major Kit TMC	1	1	N.I.
10	24 1510 98	Minor Kit TMC	1	1	N.I.
11	39 1389 04	Bolt	2	2	
	KA DD10 30	Bolt Flanged	2	2	
12	BH 1318 03	Assembly TMC With Hose FI	1	1	N.I.

PLATE NO. 39 : BRAKE PEDAL ASSEMBLY

Maxima Z LPG & Petrol

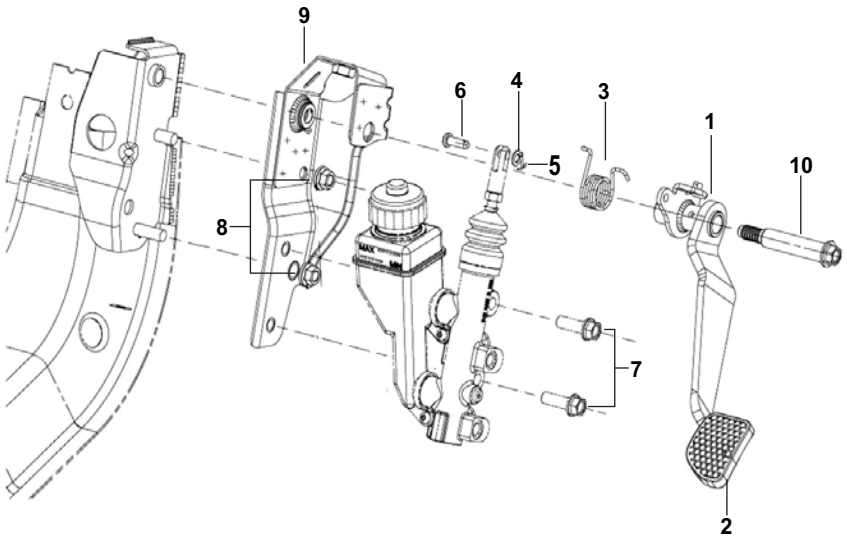

No.	Part No.	Description	LPG	PET	Remarks
1	BH 1610 19	Assembly Brake Pedal With Pad FL	1	1	
2	24 1512 32	Pad Brake Pedal	1	1	
3	BH 1610 27	Spring Brake Pedal Retainer	1	1	
4	39 0199 11	Plain Washer	2	2	
5	39 0146 08	Split Pin	1	1	
6	39 1702 07	Clevis Pin With Head	1	1	
7	KA DD10 30	Bolt Flanged	2	2	
8	39 1055 15	Nut Hex Flanged	2	2	
9	BH 1610 17	Assembly Bkt Brake Pedal Mtg FL	1	1	
10	LA D001 36	Bolt Flanged	1	1	

PLATE NO. 40 : HAND BRAKE

Maxima Z LPG & Petrol

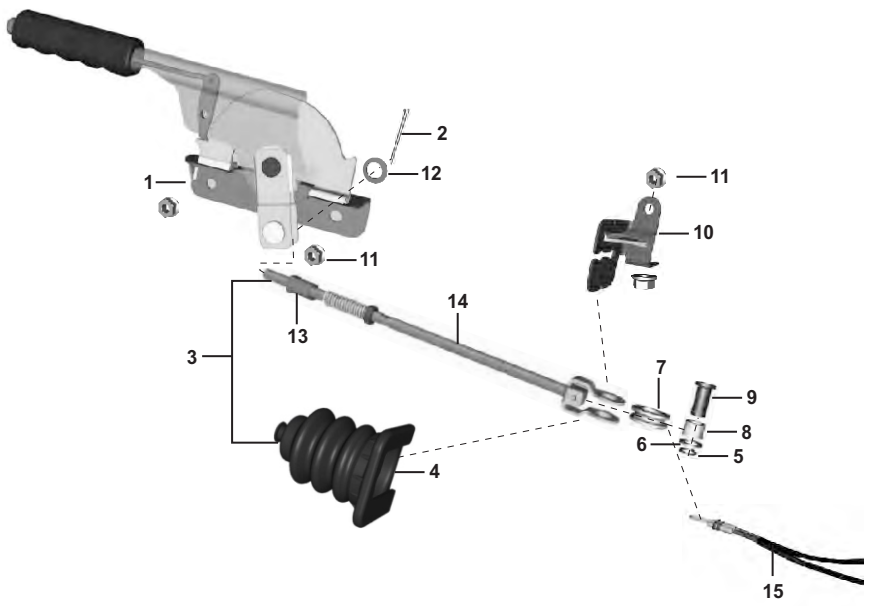

No.	Part No.	Description	LPG	PET	Remarks
1	AZ 1318 03	Lever Assembly Brake Parking	1	1	
2	KH AA20 25	Pin Cotter	1	1	
3	AZ 1318 07	Assembly Rod Front PKB UG	1	1	
4	AZ 1318 06	Cover Equalizer PBK UG	1	1	
5	KE AA10 10	Circlip External	1	1	
6	LD A000 02	Washer Plain Small	1	1	
7	BF 1611 37	Pulley	1	1	
8	BF 1611 75	Bush PKB Equalizer	1	1	
9	BF 1611 38	Pin Pivot	1	1	
10	AZ 1318 05	Bracket Equalizer	1	1	
11	KC GA08 08	Nut Hex Flanged	4	4	
12	LD A000 32	Washer Plain	1	1	
13	AZ 1318 15	Nut Special Pkb	1	1	
14	AZ 1318 16	Assembly Rod And Bracket UG	1	1	
15	AZ 1318 08	Cable Brake Parking Rear	1	1	

PLATE NO. 41 : REVERSE BRAKE ASSEMBLY

Maxima Z LPG & Petrol

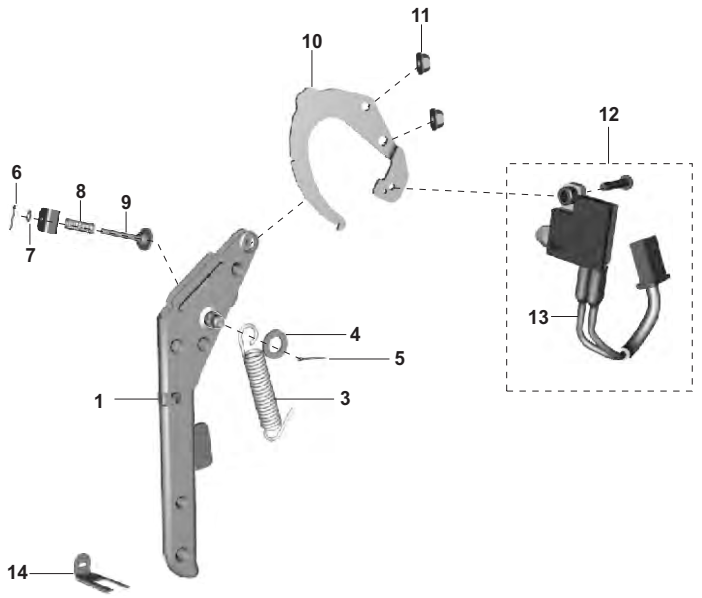

No.	Part No.	Description	LPG	PET	Remarks
1	AA 1911 13	Lever Assembly Reverse	1	1	
2	AA 1911 16	Lever Reverse Control	1	1	N.I.
3	AA 1911 17	Spring Tension Reverse Control	1	1	
4	KD AA12 22	Washer Plain Small	1	1	
5	KH AA20 18	Pin Cotter	1	1	
6	39 0151 08	Pin Split	1	1	
7	KD AA04 08	Washer Plain Small	1	1	
8	AA 1911 21	Spring For Switch	1	1	
9	AA 1911 22	Pin Assembly	1	1	
10	AA 1911 14	Ratchet Reverse Lever	1	1	
11	39 2295 15	Nut - Flange :- M8	2	2	
12	AA 2013 32	Switch Assembly Reverse	1	1	
13	AA 2013 31	Harness Revers Switch	1	1	
14	BF 1612 96	Clip Locking Reverse Cable	1	1	

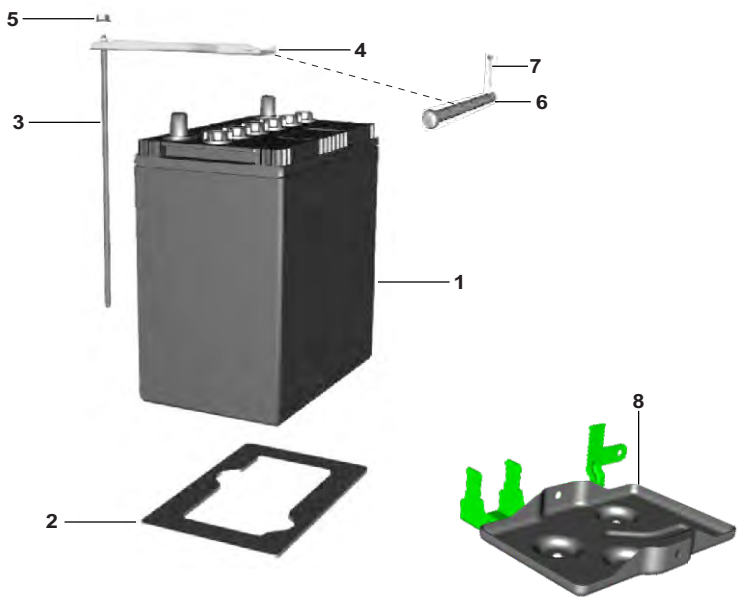

No.	Part No.	Description	LPG	PET	Remarks
1	BA 2010 67	Battery 12V, 32Ah	1	1	Dry Charged
2	24 2015 64	Packing Rubber - Battery 32 Ah	1	1	
3	AZ 1111 09	Rod Battery Clamp Ug	1	–	
	AN 1610 75	Rod Tie Battery	–	1	
4	AZ 1111 12	Clamp Battery Top Ug	1	–	
	AN 1610 74	Clamp Assembly Battery	–	1	
5	KC GA06 06	Nut Hex Flanged	2	2	
6	BF 2470 03	Pin Eng Access Cvr Hinge	1	–	
7	KH AE20 12	Pin Cotter	1	–	
8	AZ 1111 54	Tray Assembly Battery Starter Relay	–	1	

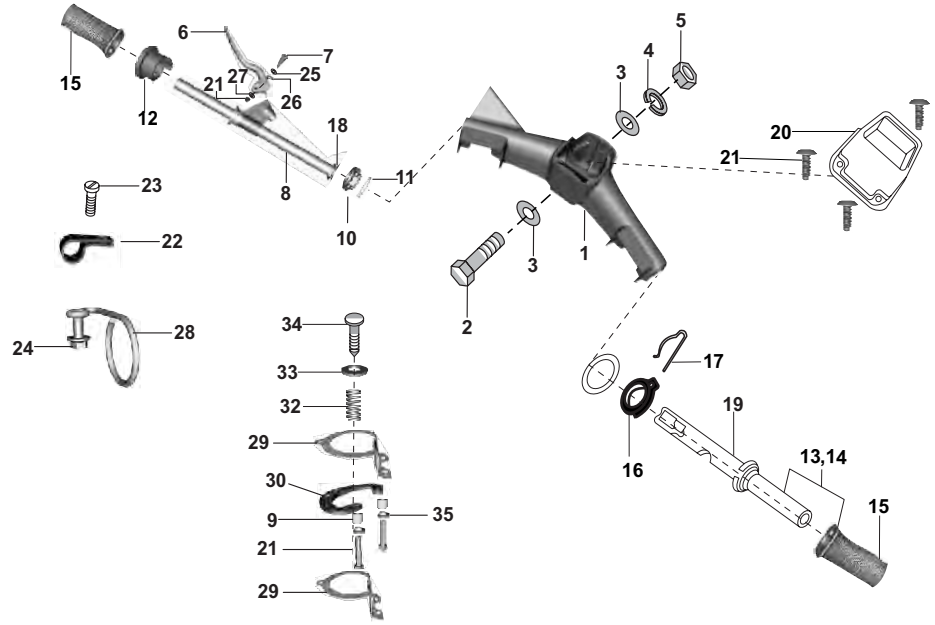

No.	Part No.	Description	LPG	PET	Remarks
1	24 1512 74	Handle Bar Body	1	1	
2	39 1377 04	Hex. Bolt With Collar	1	1	
3	39 0201 11	Plain Washer	2	2	
4	39 1829 12	Spring Washer	1	1	
5	39 0296 15	Hex Nut	1	1	
6	AA 1910 32	Lever Clutch	1	1	
7	24 1911 05	Lever Clutch Screw	1	1	
8	24 1810 74	Assembly Gear Control Tube	1	1	
9	24 1811 61	Spacer Dampening Plate	2	2	
10	24 1911 84	Gear Control Pulley	1	1	
11	24 1911 85	Spring Clip	1	1	
12	24 1910 99	Indicator Ring Gear Handle Bar	1	1	
13	24 1910 98	Tube Assly. Gas Control For Handle Bar	1	1	
14	24 1910 98	Gas Control Tube Assembly	1	1	
15	06 1910 89	Grip - Hand For Classic	1	1	
16	24 1911 01	Pulley Gas Control	1	1	
17	CM 1910 49	Spring Clip	1	1	
18	39 0941 11	Plain Washer	2	2	
19	LH C000 01	Pin Spring Gear Cotr.Tube-DI	1	1	

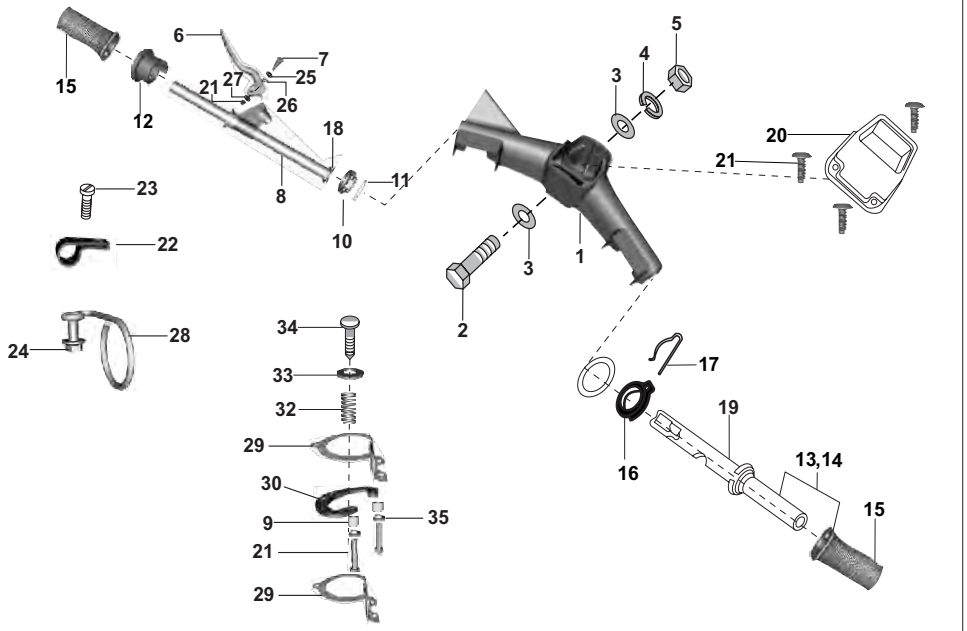

No.	Part No.	Description	LPG	PET	Remarks
20	AP 1610 47	Handle Bar Top Cover	1	1	
21	LB U000 63	Screw Truss	3	3	
22	AL 2010 70	Clip P For New Control Switch	2	2	
23	39 2631 01	Screw Pan Head M5	2	2	
24	LA D000 18	Bolt Flanged M5x0.8x10	1	1	
25	03 1902 06	Washer Plain	1	1	
26	01 1902 05	Washer Spring	1	1	
27	LD B000 74	Washer Plain	1	1	
28	24 1810 67	Guide For Clutch Cable	1	1	
29	BH 1510 66	Steering Plate Lower	1	1	
30	22 1810 58	Steering Lock Plate Assembly	1	1	
31	21 1803 07	Knob	1	1	N.I.
32	21 1803 08	Spring	1	1	
33	39 0198 11	Washer Plain	1	1	
34	KA AD05 20	Bolt	2	2	
	KA AD05 25	Bolt	2	2	
35	39 1830 12	Washer - Spring	2	2	

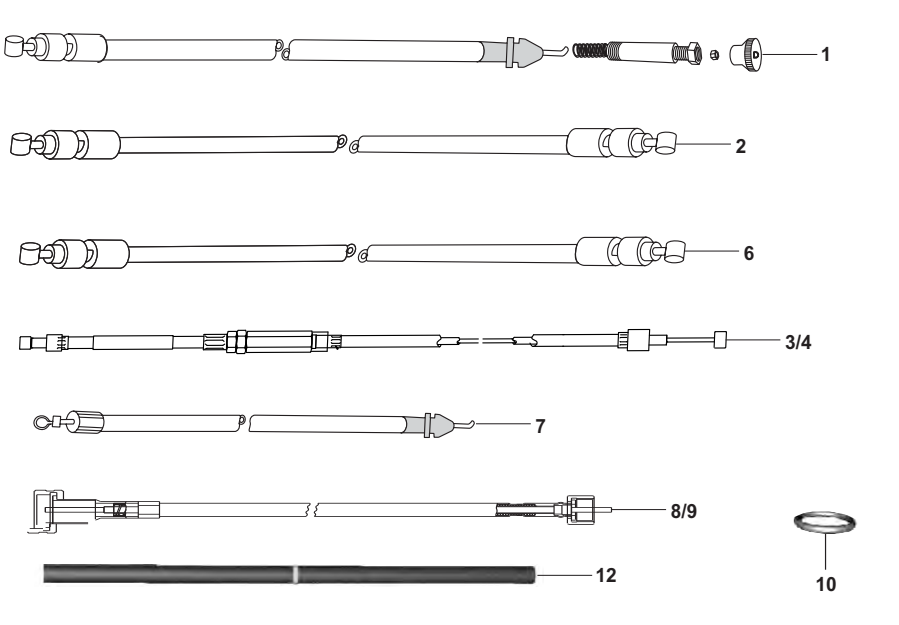

No.	Part No.	Description	LPG	PET	Remarks
1	AZ 1610 03	Cable Assembly Choke	1	1	
2	AZ 1612 09	Cable Accelerator Complete FL	1	1	
3	AZ 1612 07	Cable Gear White	1	1	
4	AZ 1612 08	Cable Gear Black	1	1	
5	AA 2013 44	Cable Lamp Fare Meter	1	1	N.I.
6	AA 1910 92	Cable Clutch	1	1	
7	AA 1911 15	Cable Reverse	1	1	
8	AZ 1612 15	Cable Speedometer	1	1	
9	AL 1910 20	Cable Speedometer-Inner	1	1	
10	39 1587 21	O-Ring (Speedo Adaptor)	1	1	
11	31 1910 32	Boot For Accelerator	1	1	N.I.
12	AZ 1612 20	Sleeve PVC	1	1	

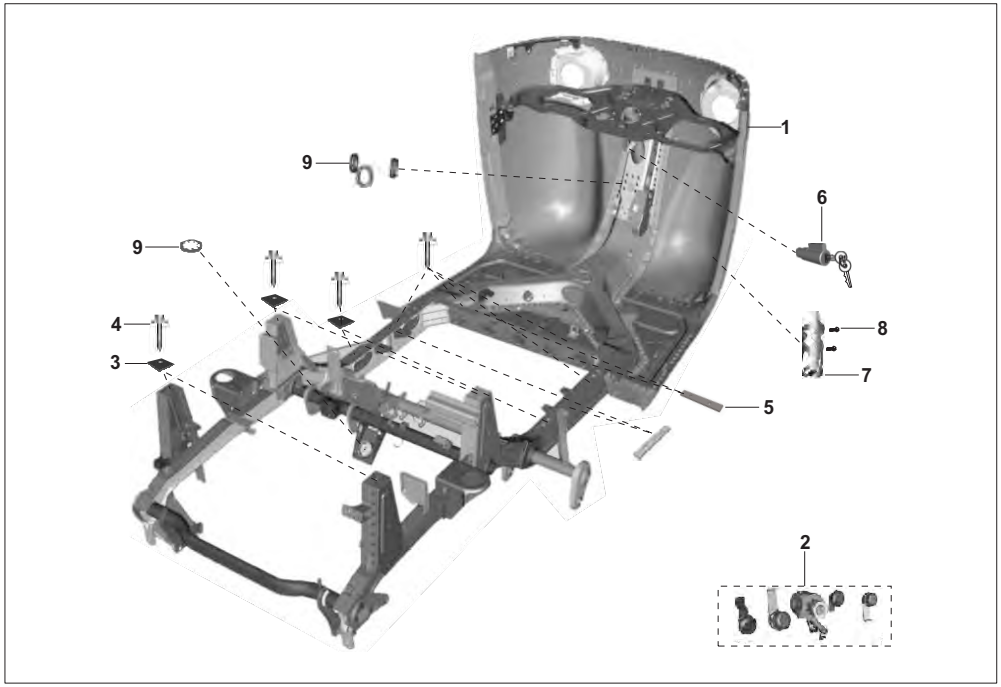

No.	Part No.	Description	LPG	PET	Remarks
1	52 RA00 38	Assembly Chassis Bare	1	–	
	52 AY00 18	ED Coating Assembly Chassis Bare	–	1	
2	52 AZ01 35	Assembly Lock Set - Compact	1	1	
3	AL 1613 92	Packing	6	6	
4	BH 2110 77	Bolt Hex With Flange	10	10	
5	24 2313 36	Packing For Body	4	4	
6	36 2440 42	Steering Lock (24181016) With Key	1	1	
7	24 1614 46	Water Bottle Holder	1	1	
8	KB AC06 14	Screw	2	2	
9	24 1652 30	Grommet Upper Part	3	3	

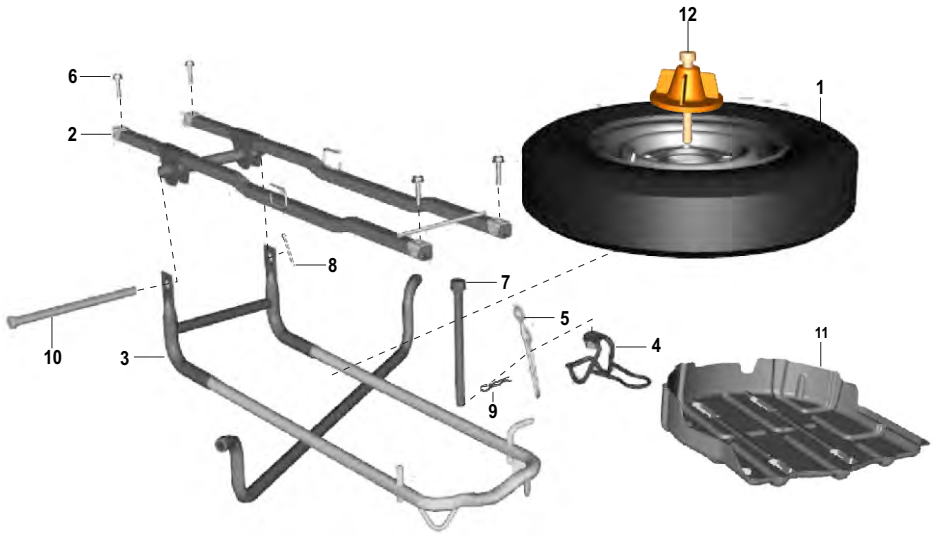

No.	Part No.	Description	LPG	PET	Remarks
1	BH 1310 19	Assembly Wheel 4.00x10 Inch	1	1	
2	AZ 1310 05	Assembly Cross Mbr Sp Wh Mtg	1	–	
3	AZ 1314 15	Cradle Assembly Wheel Spare	1	–	
4	AZ 1314 04	Hook Cradle Locking Sp Wh Mtg	1	1	
5	AT 1314 06	Cable Cradle	1	1	
6	KA DD06 30	Bolt Flanged	4	4	
7	LA D001 78	Bolt Flange-m10	1	–	
8	KH AA32 28	Pin Cotter	1	–	
9	KH BB08 28	Pin Snap	1	–	
10	AZ 1314 03	Pivot Pin	1	–	
11	AZ 1314 16	Cover Wheel Spare	1	–	
12	BH 1314 07	Assembly Cap Spare Wheel FL	–	1	

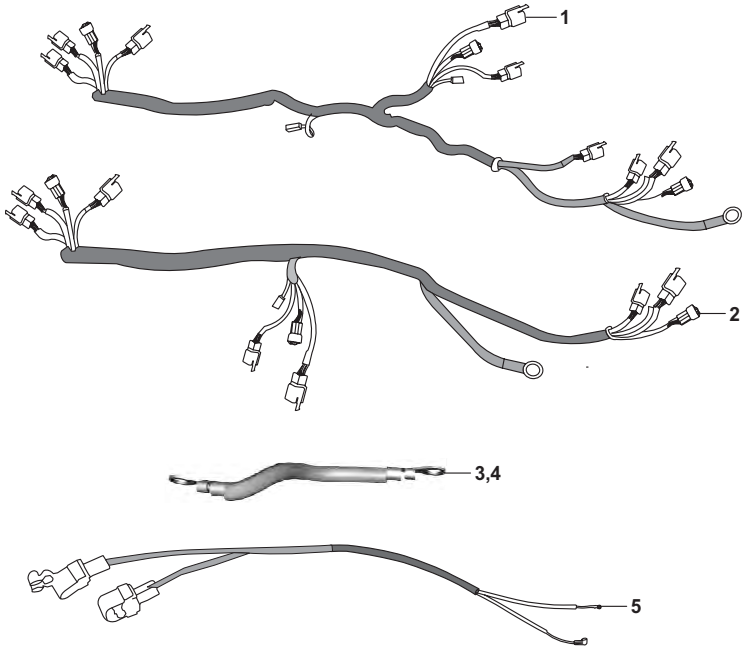

No.	Part No.	Description	LPG	PET	Remarks
1	RA 4022 12	Harness Wiring Front	1	–	
	AY 4022 04	Harness Wiring Front	–	1	
2	RA 4022 22	Harness Wiring Rear	1	–	
	RA 4022 30	Harness Wiring Rear	1	–	For FL UG Model
	AY 4022 05	Harness Wiring Rear	–	1	
3	AA 2013 91	Cable Battery -VE	1	1	
4	AA 2013 80	Cable Earth - Engine To Chassis	1	1	
5	AT 4022 12	Cable Battery	1	1	
	AF 2012 07	Cable Battery Positive	–	1	
6	60 1114 20	Cable Tie Lock 4.8 1.2 160 Pa66 B	5	5	

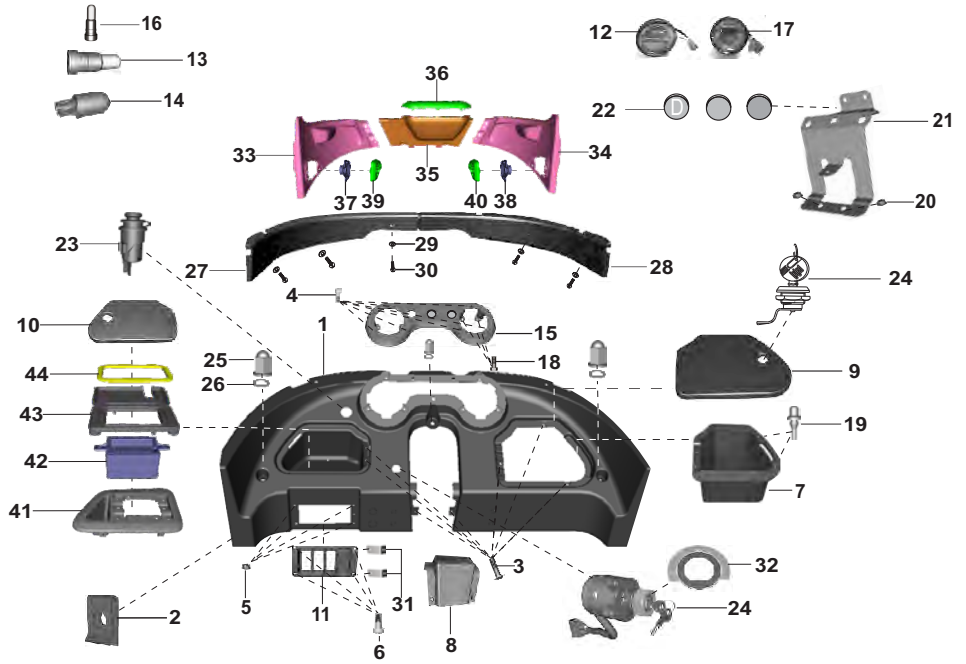

No.	Part No.	Description	LPG	PET	Remarks
1	AA 1612 15	Dashboard	1	1	
	AA 1614 46	Dashboard	1	1	For FL UG Model
2	CE 1810 15	Nut - Clip	15	15	
3	59 0100 05	Screw	9	9	
4	59 0100 07	Screw - Cross Recess	6	6	
5	39 1972 15	Nut - Hexagon	4	4	
6	39 1523 01	Screw Pan Cross	4	4	
7	24 1613 68	Toolbox RH Side	1	1	
8	24 1613 71	Cover Middle Portion	1	1	
	AA 1614 80	Cover Assembly Middle	1	1	For FL UG Model
9	AL 1615 03	Lid Tool Box RH Plastic	1	1	
	AA 1614 43	Lid Tool Box	1	1	For FL UG Model
10	AL 1615 02	Lid Tool Box LH	1	1	
11	24 1613 73	Cover For Switches	1	1	
12	AZ 4024 03	Speedometer Assembly	1	1	
13	CM 2010 54	Lamp :- 12v - 2w,Without Cap	1	1	
14	DH 1910 37	Lamp 12V	1	1	
15	AA 1612 16	Cover Speedometer	1	1	
	AA 1613 57	Cover Speedometer	1	1	For FL UG Model

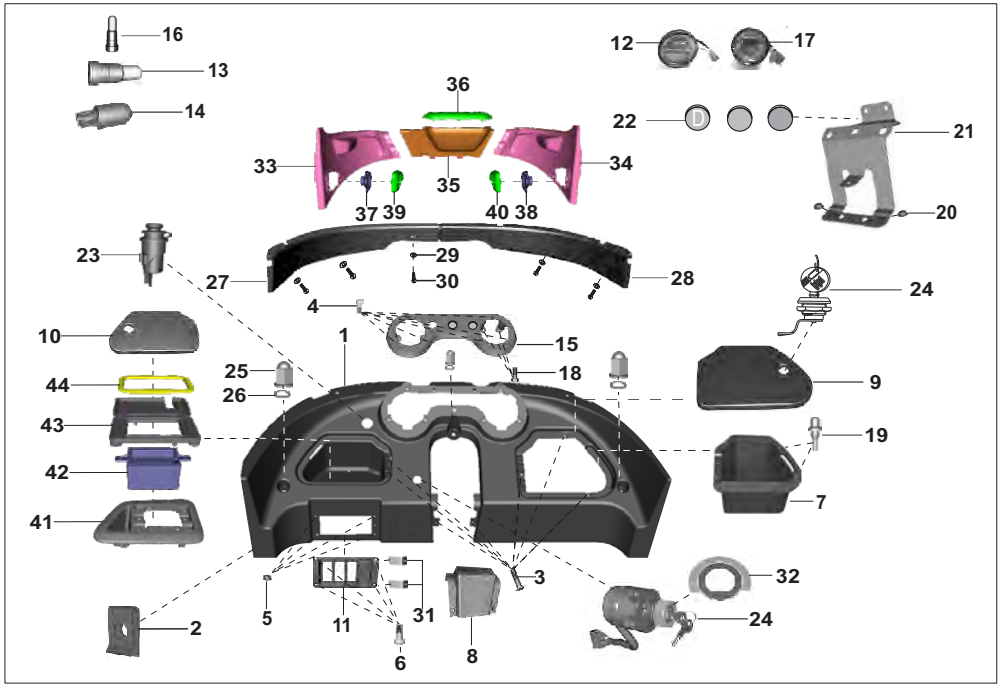

No.	Part No.	Description	LPG	PET	Remarks
16	AA 2013 41	Lamp 12v 1.7w	4	4	
17	RA 4026 02	Indicator Assembly RH Pod LPG	1	–	
	AA 2013 62	Assembly Indicator RH	–	1	
18	39 1523 01	Screw Pan Cross - M5	6	6	
19	24 2301 98	Pad - Rubber	2	2	
20	KC GD08 08	Nut Hex Flanged-Control Bkt	2	2	
21	AA 1612 25	Bracket Control Mounting	1	1	
22	AZ 1612 13	Knob Choke	1	1	
23	AL 2011 00	Charger Mobile	1	1	
	AA 2015 15	Socket Charger	1	1	For FL UG Model
24	36 AA40 28	Ignition Lock (AA201254) With Key	1	1	
25	39 1704 15	Domed Cap Nut M6	3	3	
26	39 0211 11	Washer Plain	3	3	
27	AA 1612 18	Trim Upper Small LH	1	1	
28	AA 1612 19	Trim Upper Small RH	1	1	
29	KD BB05 12	Washer Plain	5	5	
30	KB BA05 25	Screw Pan Cross	5	5	
31	AA 1612 90	Bracket Harness	1	1	
32	AA 2012 58	Label Parking Off On Start Ptrl	1	1	

PLATE NO. 48 : DASHBOARD
Maxima Z LPG & Petrol

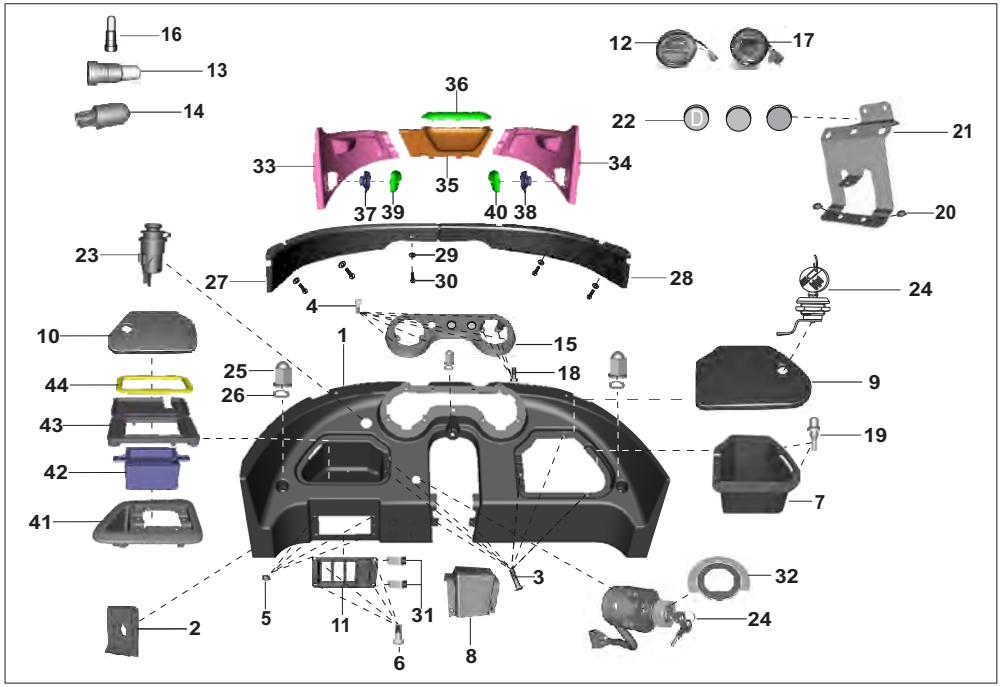

No.	Part No.	Description	LPG	PET	Remarks
32	AA 2314 09	Label Parking-Ignition	1	1	For FL UG Model
33	AA 1614 33	Trim Upper LH	1	1	For FL UG Model
34	AA 1614 35	Trim Upper RH	1	1	For FL UG Model
35	AA 1614 37	Trim Middle	1	1	For FL UG Model
36	AA 1614 38	Trim Middle Upper	1	1	For FL UG Model
37	AA 1614 75	Assembly Speaker LH	1	1	For FL UG Model
38	AA 1614 76	Assembly Speaker RH	1	1	For FL UG Model
39	AA 1614 73	Cover Assembly Speaker LH	1	1	For FL UG Model
40	AA 1614 74	Cover Assembly Speaker RH	1	1	For FL UG Model
41	AA 1614 79	Box Assembly Utility	1	1	For FL UG Model
42	BF 4034 07	FM Radio 6 Pole Coupler	1	1	For FL UG Model
43	AA 1614 47	Housing Radio	1	1	For FL UG Model
44	AA 1614 48	Seal	1	1	For FL UG Model

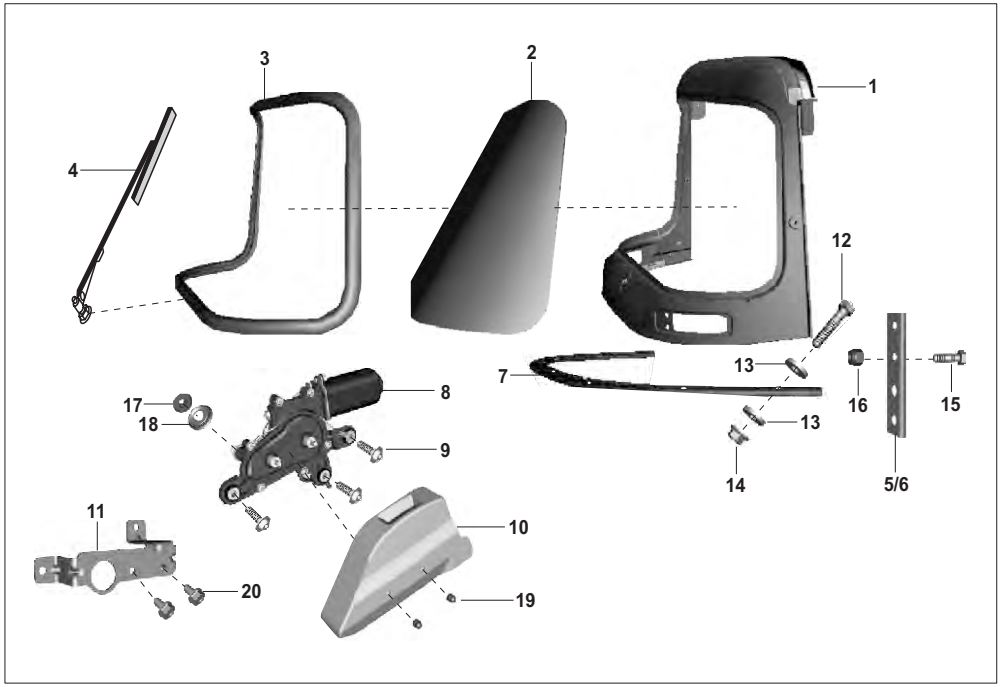

No.	Part No.	Description	LPG	PET	Remarks
1	52 2406 45	Wind Shield Refl ED Coated	1	1	
2	BH 1840 00	Glass One Piece	1	1	
3	AA 2312 39	Beading One Piece W/s Glass	1	1	
4	AL 2410 23	Wiper Assembly	1	1	
5	24 2316 15	Joint Plate LH	1	1	
6	24 2316 16	Joint Plate RH	1	1	
7	24 2316 41	Packing Shield And W Shield	1	1	
8	AA 2012 63	Wiper Motor With Capacitor	1	1	
9	LA C000 08	Bolt Socket	3	3	
10	AA 2312 23	Cover Wiper Motor Black	1	1	
11	24 2316 25	Bracket Wiper Motor Mounting	1	1	
12	KA AA05 25	Bolt	11	11	
13	39 0258 11	Plain Washer	18	18	
14	KC GA05 05	Flange Nut	11	11	
15	KA AA05 16	Screw - Hexagon Head :- M5	8	8	
16	39 0326 15	Flanged Nut	11	11	
17	24 2015 25	Grommet Wiper Motor Big	1	1	
18	BH 1110 71	Cap Wiper Motor Big	1	1	

PLATE NO. 49 : WINDSHIELD & WIPER MOTOR | Maxima Z LPG & Petrol

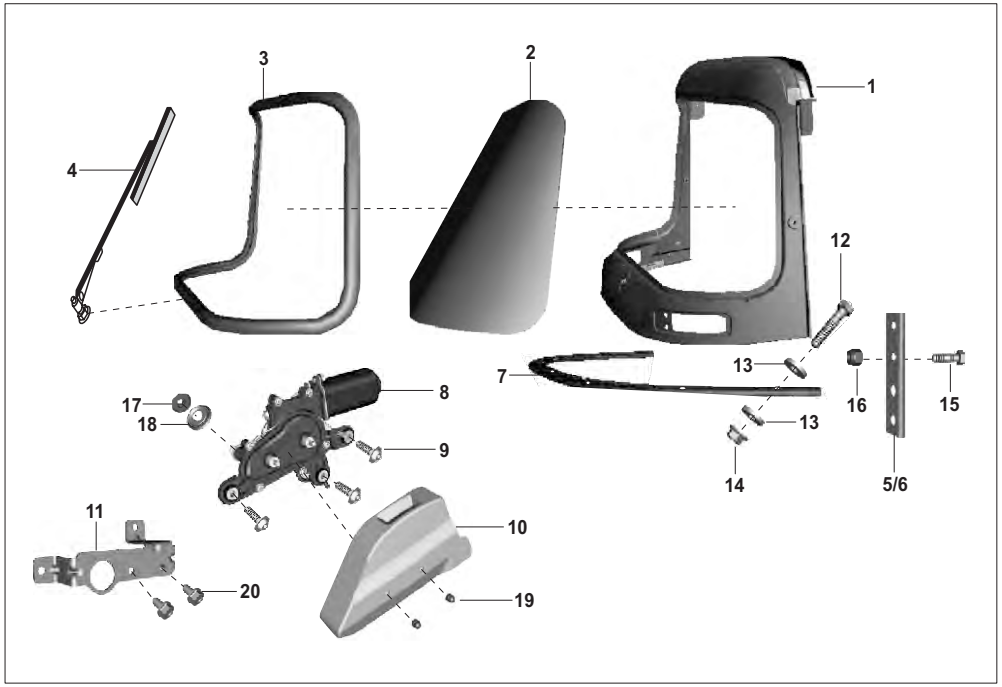

No.	Part No.	Description	LPG	PET	Remarks
19	24 2314 75	Nut Dome Cap-M5 Cover Wiper	2	2	
20	KA DA06 12	Bolt Flanged - Cap Wiper Motor	2	2	

PLATE NO. 50 : STEERING & HEAD LAMP COVER

Maxima Z LPG & Petrol

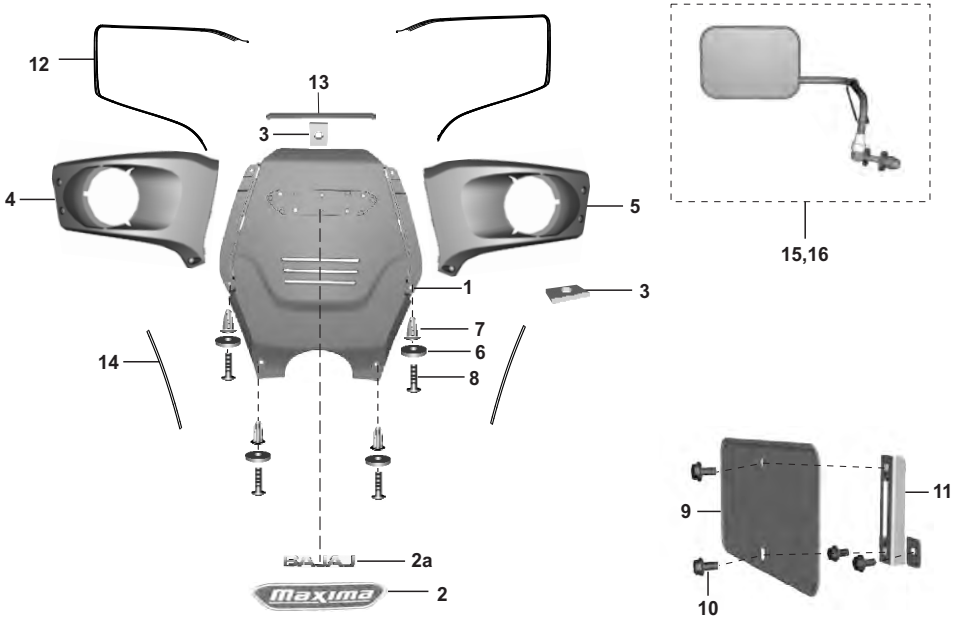

No.	Part No.	Description	LPG	PET	Remarks
1	AZ 1850 10	Assembly Cover Steering	1	1	
2	AZ 2330 09	Emblem Maxima	1	1	
2a	AZ 2330 08	Emblem Bajaj	1	1	
3	24 1652 14	Grommet Steering Cover	1	1	
4	AA 1611 90	Housing Headlamp LH	1	1	
5	AA 1611 91	Housing Headlamp RH	1	1	
6	39 0454 11	Washer - Plain	4	4	
7	AL 1612 36	Plug For Blinker Housing	4	4	
8	59 0100 05	Screw Round Head	4	4	
9	22 1612 21	Plate - Number	1	1	
10	KA DD06 12	Bolt Flanged	4	4	
11	24 1651 32	Bracket Fr Number Plate Mtg	1	1	
12	AA 1612 68	Beading Housing Headlamp	2	2	
13	AA 1612 69	Beading Steering Cover Upper	1	1	
14	AA 1612 70	Beading Steering Cover Lower	2	2	
15	BB 2210 18	Mirror Maxima RH	1	1	
16	BB 2210 17	Mirror Maxima LH	1	1	

PLATE NO. 51 : PASSENGER BODY ASSEMBLY

Maxima Z LPG & Petrol

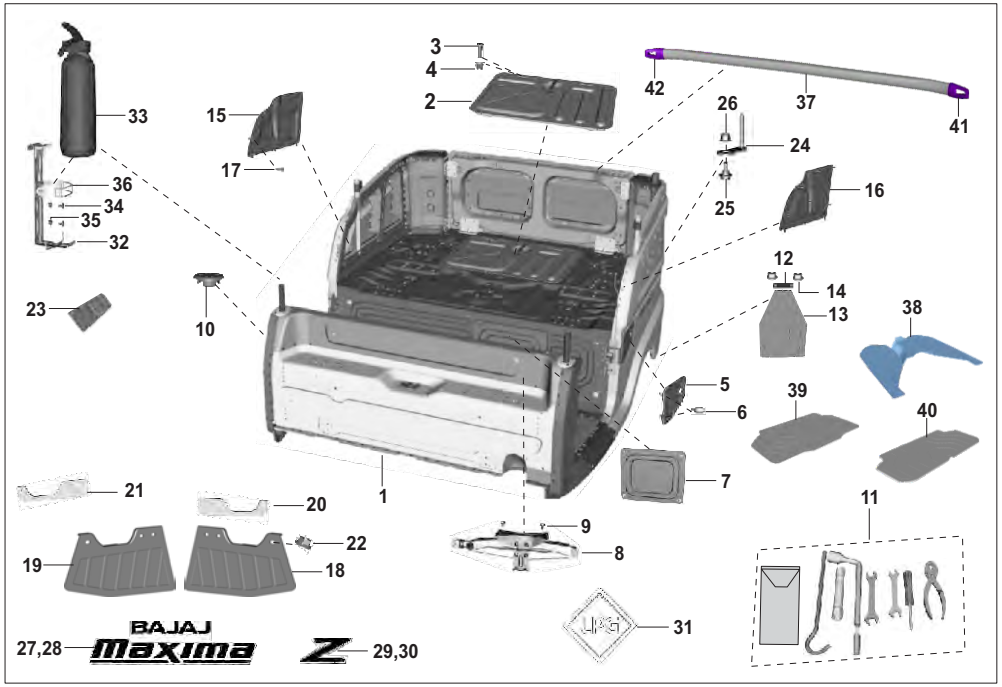

No.	Part No.	Description	LPG	PET	Remarks
1	52 AZ01 75	Assembly Passenger Body Complete	1	–	
	52 AY00 19	ED Coating - Assly. Body With Wheel Arch	–	1	
2	52 BH02 10	Door Engine Access	2	2	
3	LB U000 09	Screw Mushroom Head	2	2	
4	AL 1615 09	Grommet Screw Eng Door	2	2	
5	52 AZ01 78	Door Assembly Fuel Filling	1	1	
6	06 2210 28	Shock Absorber Pad	2	2	
7	52 AZ01 74	Cover Battery Access	1	1	
8	BB 2210 04	Jack Assembly	1	1	
9	KA DD06 12	Bolt Flanged	8	8	
10	AZ 1824 03	Cap Spare Wheel Mtg Bolt	1	1	
11	AZ 2310 05	Tool Kit	1	1	
12	BH 1814 02	Plate For Mud Flap	2	2	
13	AZ 1814 01	Flap Mud-Rear	1	1	
14	39 2711 15	Nut Flange	4	4	
15	AZ 1824 02	Trim Panel Body RH	1	1	
16	AZ 1824 01	Trim Panel Body LH	1	1	
17	BF 2411 52	Rivet Plastic Door Edge Beading	10	10	
18	BB 1612 44	Mud Flap Rear LH	1	1	

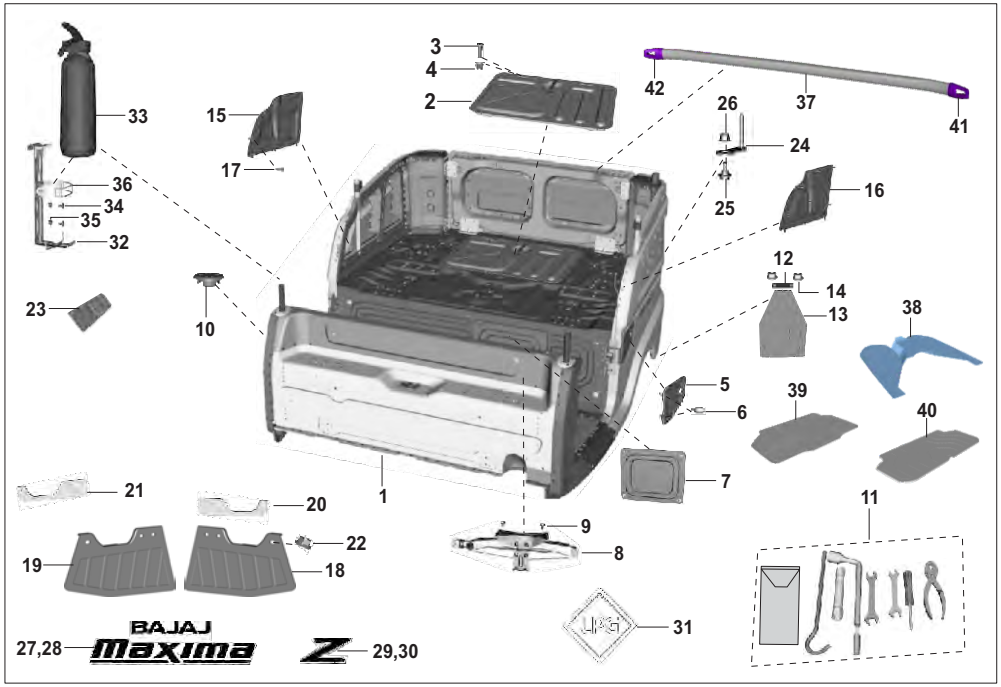

No.	Part No.	Description	LPG	PET	Remarks
19	BB 1612 45	Mud Flap Rear RH	1	1	
20	BH 1814 05	Plate Mud Flap Support LH	1	1	
21	BH 1814 06	Plate Mud Flap Support RH	1	1	
22	KC GA05 05	Nut Hex Flanged	6	6	
23	AZ 1812 04	Cover Trim	2	2	
24	BH 2112 01	Assembly Plate Link Frame Body	1	1	
25	GF 1611 56	Bolt Step-M6x1-olive	1	1	
26	KC KA06 09	Nut Nyloc Flanged	1	1	
27	AZ 2330 13	Label Bajaj Maxima-Black	1	1	
28	AZ 2330 12	Label Bajaj Maxima-White	1	1	
29	AZ 2330 14	Label Z-Maxima Black	1	1	
30	AZ 2330 15	Label Z-Maxima White	1	1	
31	AM 1610 20	Label LPG	2	–	
	24 2210 33	Emblem Petrol	–	1	
32	AF 2210 22	Bracket Assembly Extinguisher Fire	1	–	
33	AF 2210 07	Extinguisher Fire And Bkt Assembly	1	–	
34	KB UA06 12	Screw Truss	2	–	
35	KC GA06 06	Nut Hex Flanged	2	2	
36	AS 2300 05	Clamp	1	–	

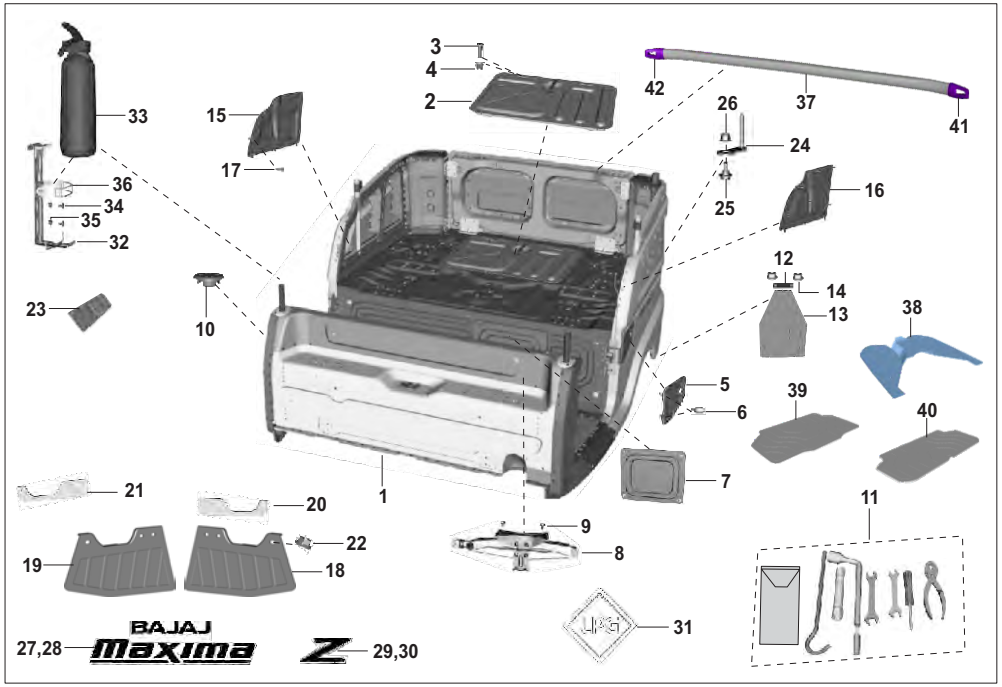

No.	Part No.	Description	LPG	PET	Remarks
37	52 AY01 59	ED Coated Bumper Rear	1	1	For FL UG Model
38	24 1652 15	Mat Floor Front FL	1	1	
39	AZ 2318 02	Mat Floor Lower	1	1	
40	AZ 2318 03	Mat Floor Upper	1	1	
41	AY 1138 09	Cap LH	1	1	For FL UG Model
42	AY 1138 10	Cap RH	1	1	For FL UG Model

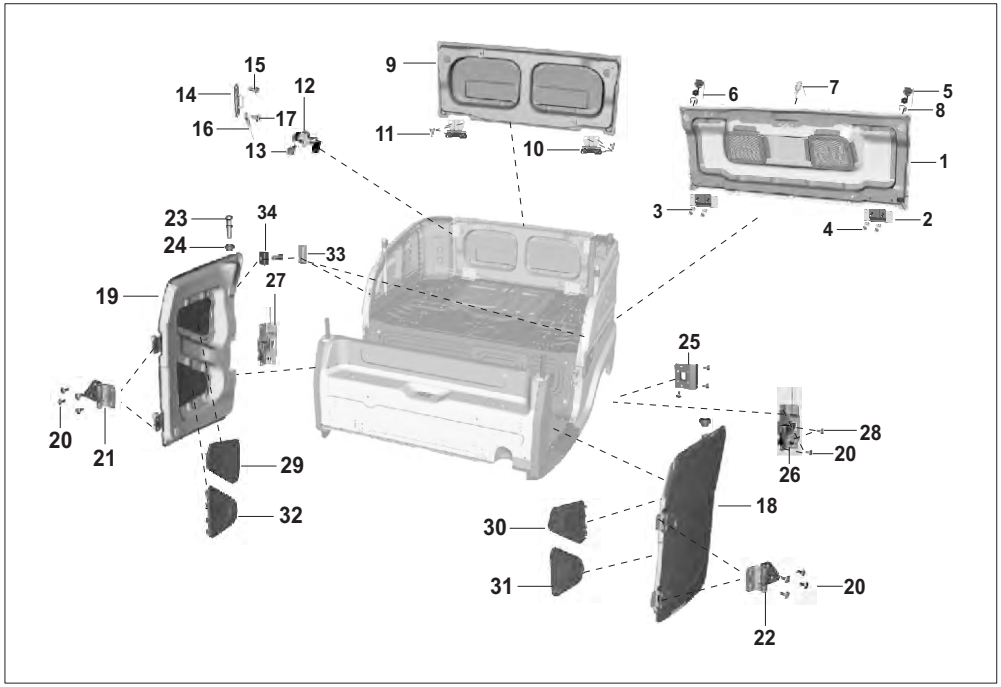

No.	Part No.	Description	LPG	PET	Remarks
1	52 BH02 09	Assembly Door RR Engine Access	1	1	
2	AZ 2440 17	Assembly Hinge EAC	2	2	
3	KD BC08 18	Washer Plain	4	4	
4	KC GC06 06	Nut Hex Flanged	8	8	
5	BH 2111 65	Knob Rear Door Lower	2	2	
6	BH 2111 63	Rubber Damper Rear Door Upper	2	2	
7	BH 2111 58	Rubber Damper Rear Door Lower	3	3	
8	KE CA04 15	Circlip Type E	2	2	
9	52 AZ01 80	ED Coated Assembly Door Rear Upper	1	1	
10	AZ 2470 00	Assembly Hinge RR Upper Door	2	2	
11	KA DF08 16	Bolt Flanged	8	8	
12	BH 2418 00	Latch Door Rear Upper	2	2	
	AZ 2450 00	Latch Assembly	2	2	For FL UG Model
13	LA D000 64	Bolt Flanged-M6x1xl 20xpre-coat	2	2	
14	BH 2110 51	Bracket Hook Upper Door	2	2	
15	KA DF06 16	Bolt Flanged	2	2	
16	AZ 2440 26	Cable Door Holding	2	2	
17	BH 2110 57	Bolt Shoulder	4	4	
18	52 AZ01 76	Assembly Side Door LH	1	1	

PLATE NO. 52 : DOORS ASSEMBLY
Maxima Z LPG & Petrol

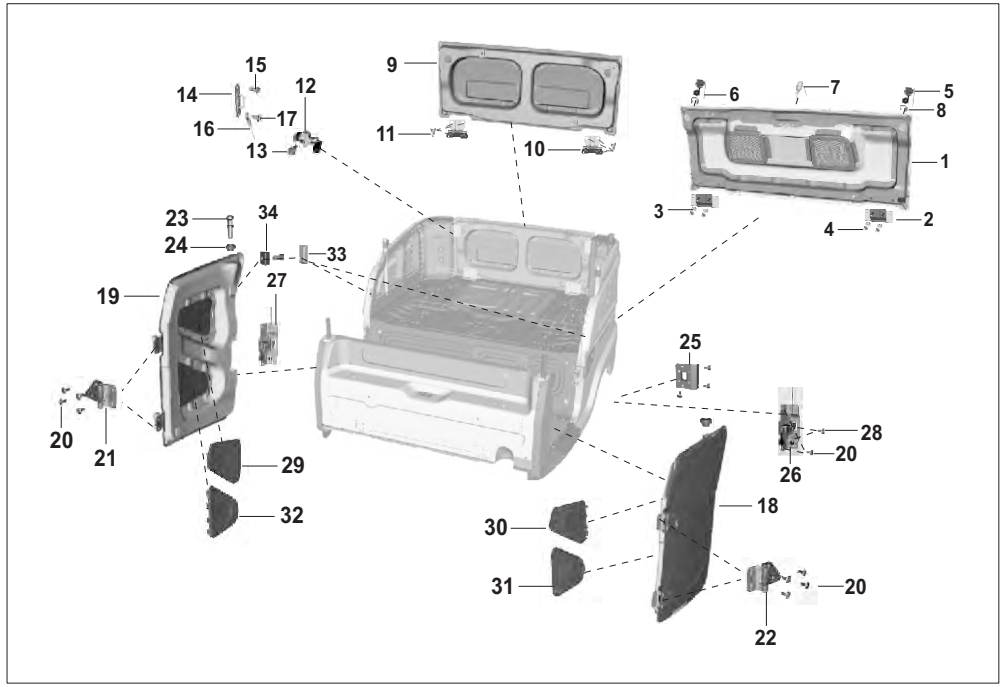

No.	Part No.	Description	LPG	PET	Remarks
19	52 AZ01 77	Assembly Side Door RH	1	1	
20	KB UC06 14	Screw Truss	24	24	
21	AZ 2414 02	Assembly Hinge Side Door RH	2	2	
22	AZ 2414 01	Assembly Hinge Side Door LH	2	2	
23	AL 2413 95	Knob Door Lock	2	2	
24	AZ 2410 39	Guide Knob Mtg Side Door	2	2	
25	AZ 2420 04	Plate Striker Latch	2	2	
26	AZ 2420 02	Latch Assembly Side Door LH	1	1	
27	AZ 2420 03	Latch Assembly Side Door RH	1	1	
28	KB UC06 20	Screw Truss- Latch	4	4	
29	AZ 1810 04	Trim Door Top-LH	1	1	
30	AZ 1810 06	Trim Door Top-RH	1	1	
31	AZ 1810 07	Trim Door Bottom-RH	1	1	
32	AZ 1810 05	Trim Door Bottom-LH	1	1	
33	AZ 2410 29	Damper Body Side Upr	2	2	
34	AZ 2410 31	Damper Side Door Upr	2	2	

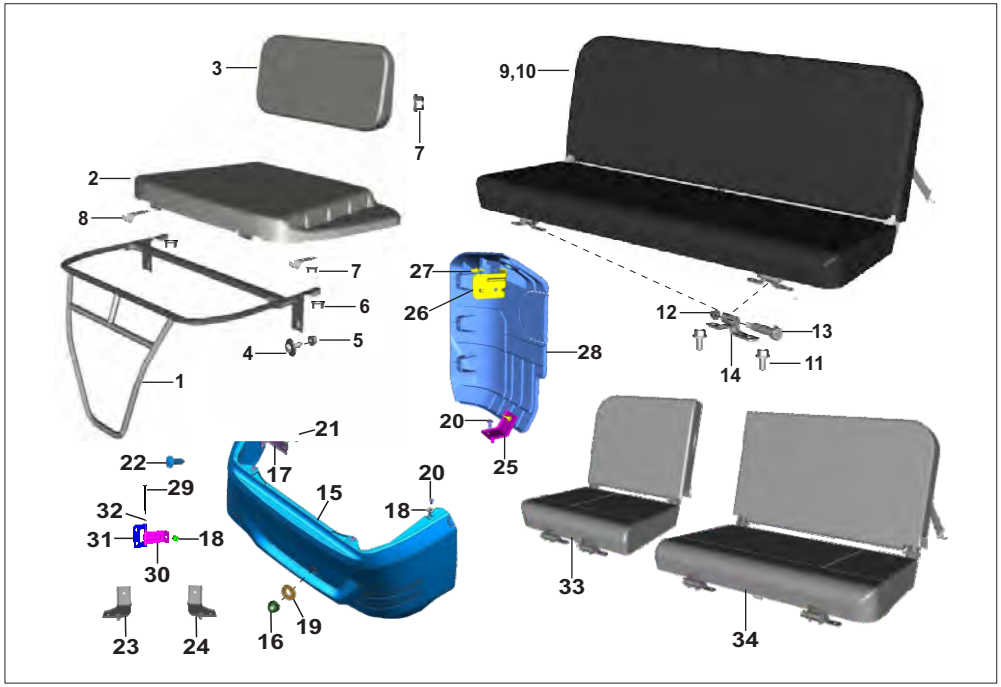

No.	Part No.	Description	LPG	PET	Remarks
1	AZ 1910 04	Assembly Frame Driver Seat	1	–	
	BH 1910 75	Assembly Frame Driver Seat UG	–	1	
2	AY 1910 07	Seat Assembly Driver Black	1	1	
	AA 2100 36	Seat Assembly Driver	1	1	For FL UG Model
	AZ 1910 14	Seat Assembly Driver Black	1	–	
	AY 1910 08	Seat Assembly Driver Brown	1	1	
	AZ 1910 15	Seat Assembly Driver Brown	1	–	For FL UG Model
3	BH 1910 19	Driver Backrest	1	1	
	AZ 1910 24	Backrest Assembly Driver	1	1	For FL UG Model
4	24 2110 26	Bolt Combination	2	2	
5	KC GA08 08	Nut Hex Flanged	2	2	
6	KC GA06 06	Nut - Seat Frame	2	2	
7	KC GA05 05	Nut Hex Flanged	8	8	
8	BH 1910 32	Bracket Seat Base Mtg	2	2	
9	BH 1910 61	Assembly Passenger Seat	1	1	
10	AY 1910 10	Assembly Seat Passenger Brown	1	1	
11	KA DA08 16	Bolt Flanged	4	4	
12	KC KC08 11	Nut Nyloc Flange	2	2	
13	LA A000 33	Bolt	2	2	
14	BH 1910 77	Bracket Assembly Hinge Mounting	2	2	

PLATE NO. 53 : SEAT ASSEMBLY

Maxima Z LPG & Petrol

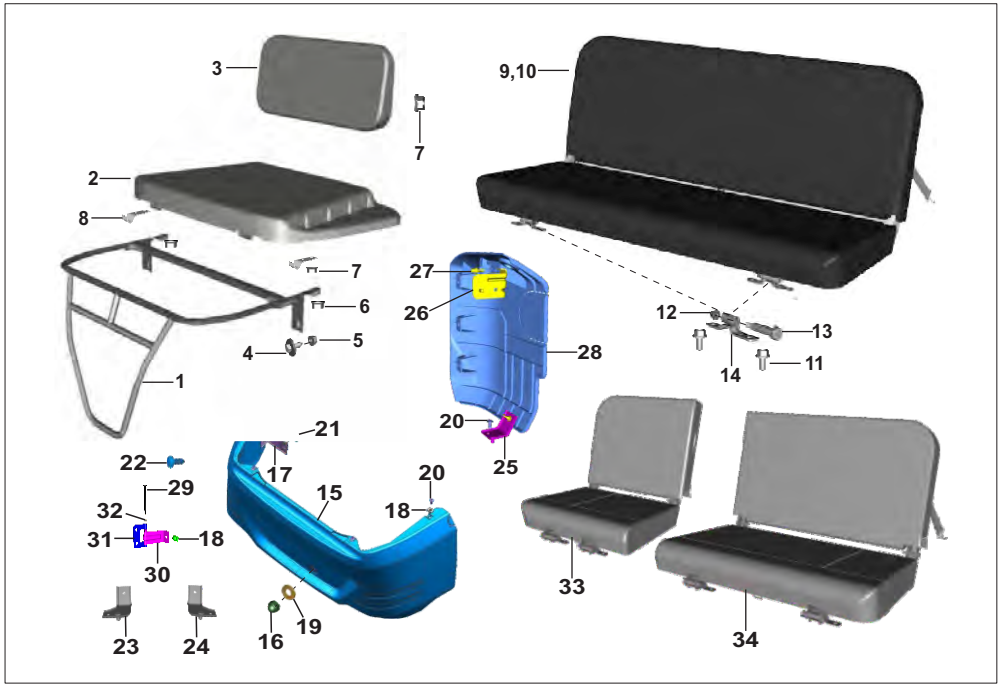

No.	Part No.	Description	LPG	PET	Remarks
15	AZ 1812 08	Cover Seat Driver	1	–	
	36 AA40 70	Kit 3W Driver Seat Enclosure	–	1	
16	KC EA06 05	Nut Dome Cap Single Piece	–	1	
17	AZ 1812 14	Bracket Cover LH	1	–	
	24 2318 06	Bracket Enclosure Side Mtg	–	2	
18	DJ 1810 65	Nut - Clip	6	4	
19	KD BC08 18	Washer Plain	–	3	
20	KB UA06 14	Screw Truss	13	–	
	KB UC06 14	Screw Truss	–	7	
21	KC GC06 06	Nut Hex Flanged	2	4	
22	BF 2411 52	Rivet Plastic Door Edge Beading	5	–	
23	AZ 1812 17	Bracket Cover Lower LH	1	–	
24	AZ 1812 13	Bracket Cover Lower	1	–	
25	AZ 1812 15	Bracket Stopper Lid	1	–	
26	AZ 1812 16	Bracket Lock	1	–	
27	24 2301 98	Pad Rubber	2	–	
28	AZ 1812 09	Lid Cover	1	–	
29	LA A000 48	Bolt	2	–	
30	AZ 1812 11	Bracket Hinge Lid	2	–	
31	AZ 1812 10	Bracket Hinge Cover	2	–	

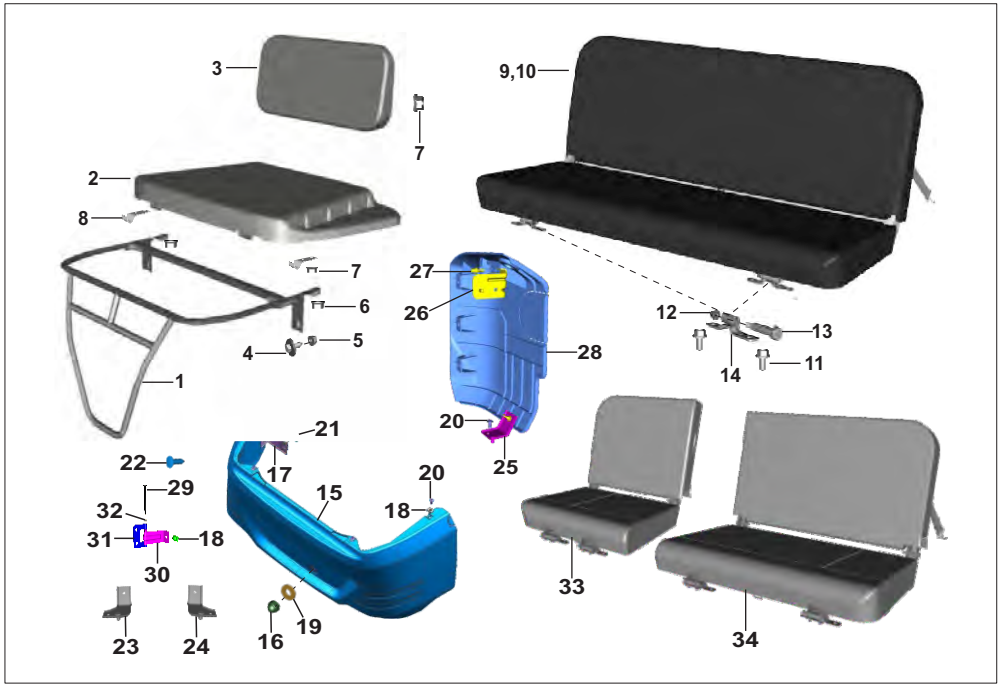

No.	Part No.	Description	LPG	PET	Remarks
32	KC AC05 04	Nut Hex	2	–	
33	52 AY01 31	Assly Passenger Seat RH Dark Brown	1	1	For FL UG Model
34	52 AY01 35	Assly Passenger Seat LH Dark Brown	1	1	For FL UG Model

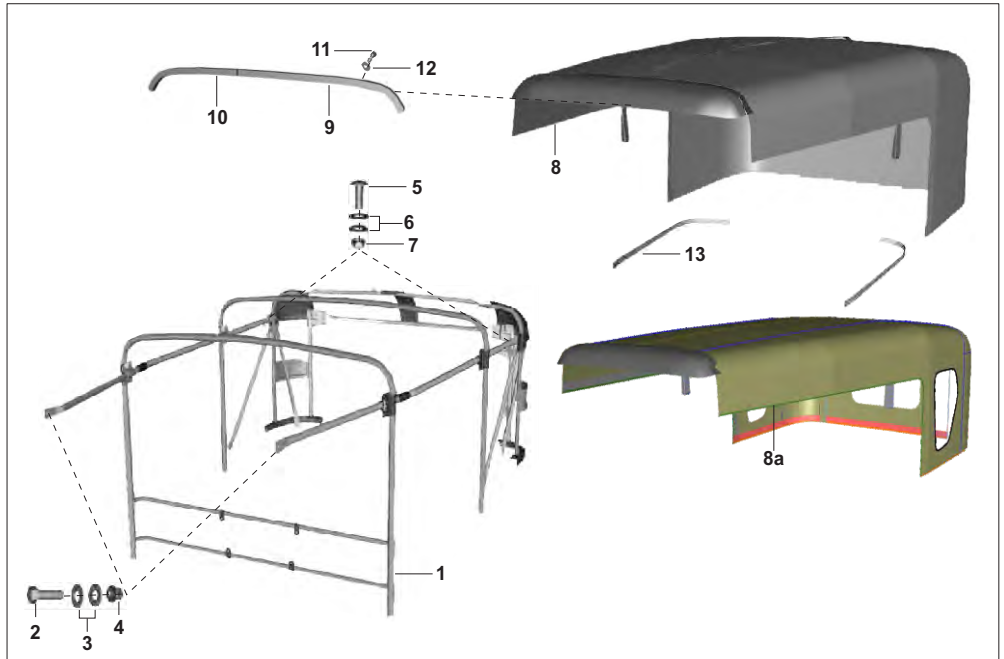

No.	Part No.	Description	LPG	PET	Remarks
1	AZ 2110 93	Frame Assembly Hood	1	1	
2	KA AA08 25	Bolt	2	2	
3	KD BB10 22	Washer Plain	4	4	
4	KC KA08 11	Nut Nyloc Flanged	2	2	
5	KB UA06 20	Screw Truss	10	10	
6	39 1309 11	Plain Washer	12	12	
7	39 1353 15	Nut Nyloc M6x1	2	22	
8	AZ 1860 01	Hood Assembly	1	1	
8a	52 BH04 43	Assembly Hood Black	1	1	For FL UG Model
	52 BH04 44	Assembly Hood White	1	1	For FL UG Model
	52 BH04 45	Assembly Hood Yellow	1	1	For FL UG Model
	52 BH04 46	Assembly Hood Mushroom	1	1	For FL UG Model
9	24 2317 72	Stick Assembly - Hood	1	1	
10	24 2317 75	Stick Assembly - Hood	1	1	
11	KB RA48 19	Screw Tapping Pan Cross	7	7	
12	39 1501 11	Washer - Plain	7	7	
13	24 2318 71	Strip Hood Fixing	2	2	

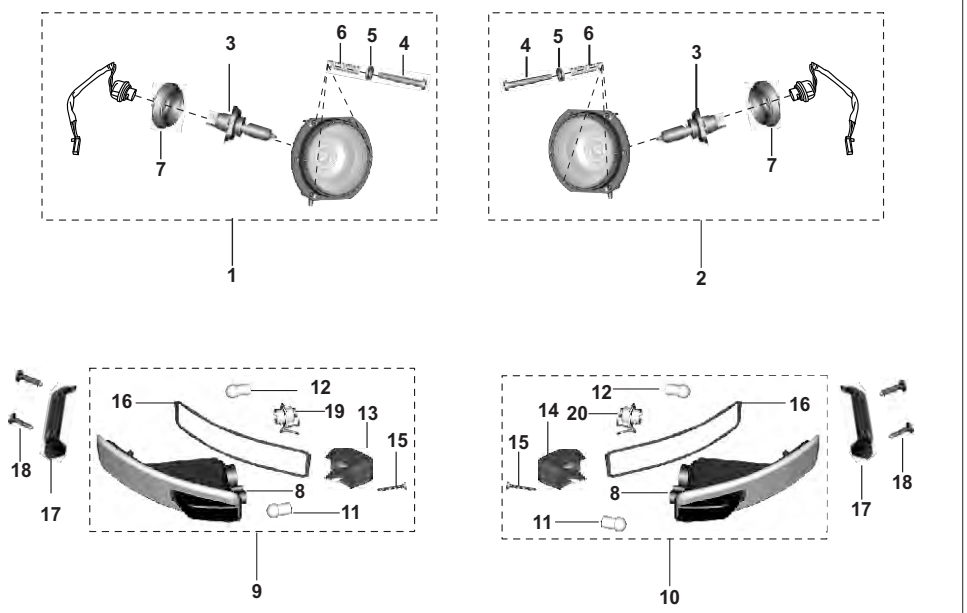

No.	Part No.	Description	LPG	PET	Remarks
1	AL 2011 19	Lamp Head LH	1	1	
2	AL 2011 20	Lamp Head RH	1	1	
3	CL 2010 23	Lamp 12v-35/35w-hs1	2	2	
4	AA 2012 64	Screw Pan Cross-m5	6	6	
5	39 0258 11	Plain Washer	6	6	
6	BB 2010 70	Spring - Head Lamp Mtg	6	6	
7	AA 2012 62	Rubber Cap Head Lamp	2	2	
8	24 2015 04	Housing Assembly Indicator Front	2	2	
9	24 2014 87	Indicator Assembly Front LH	1	1	
10	24 2014 88	Indicator Assembly Front RH	1	1	
11	JD 4010 32	Bulb 12v 5w E-Marked	2	2	
12	18 2010 44	Lamp :- 12v - 10w - R 10w	2	2	
13	24 2014 85	Cover Side Indicator Front LH	1	1	
14	24 2014 86	Cover Side Indicator Front RH	1	1	
15	KB RC35 19	Screw Tapping Pan Cross	2	2	
16	24 2014 84	Gasket Front Side Indicator	2	2	
17	24 2015 23	Holder Front Indicator Assembly	2	2	
18	KB RC35 16	Screw Tapping Pan Cross	4	4	

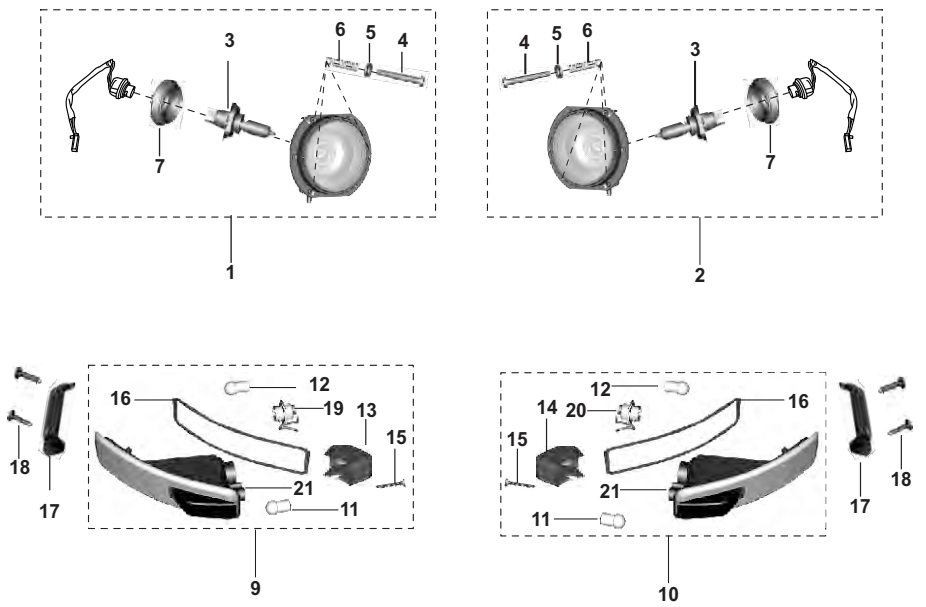

No.	Part No.	Description	LPG	PET	Remarks
19	24 2015 02	Cable Front Indicator With Holder LH	1	1	
20	24 2015 03	Cable Front Indicator With Holder RH	1	1	

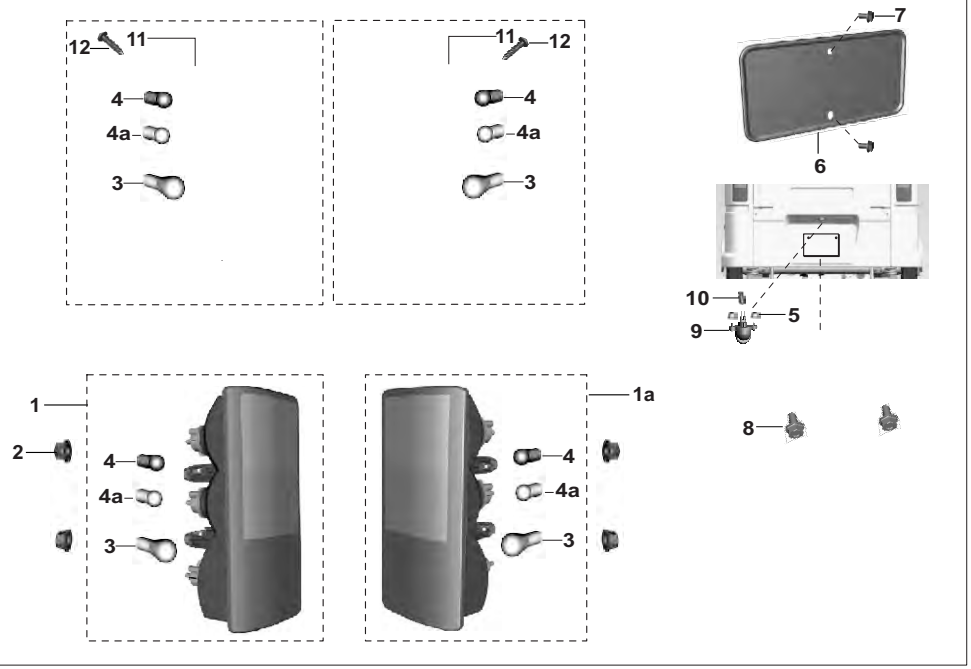

No.	Part No.	Description	LPG	PET	Remarks
1	AZ 4010 01	Assembly Tail Lamp LH UG	1	1	
1a	AZ 4010 02	Assembly Tail Lamp RH UG	1	1	
2	39 2383 15	Hex Nut Flange-m8	4	4	
3	20 2010 29	Lamp 12v 21/5w	2	2	
4	GH 2010 12	Lamp:-12v-10w (Colour:-Amber)	4	4	
4a	18 2010 44	Lamp :-12v - 10w - R 10w	4	4	
5	39 1560 15	Flange Hex Nut -m4	2	2	
6	22 1612 21	Plate-Number Rear	1	1	
7	KA DD06 12	Bolt Flanged	4	4	
8	39 1944 04	Flange Bolt	4	4	
9	BH 4010 16	Number Plate Light With Lamp	1	1	
10	JD 4010 32	Bulb 12v 5w E-marked	1	1	
11	KC GD06 06	Nut Hex Flanged Ind Bkt	4	4	
12	KB RA42 19	Screw Tapping Pan Cross	4	4	

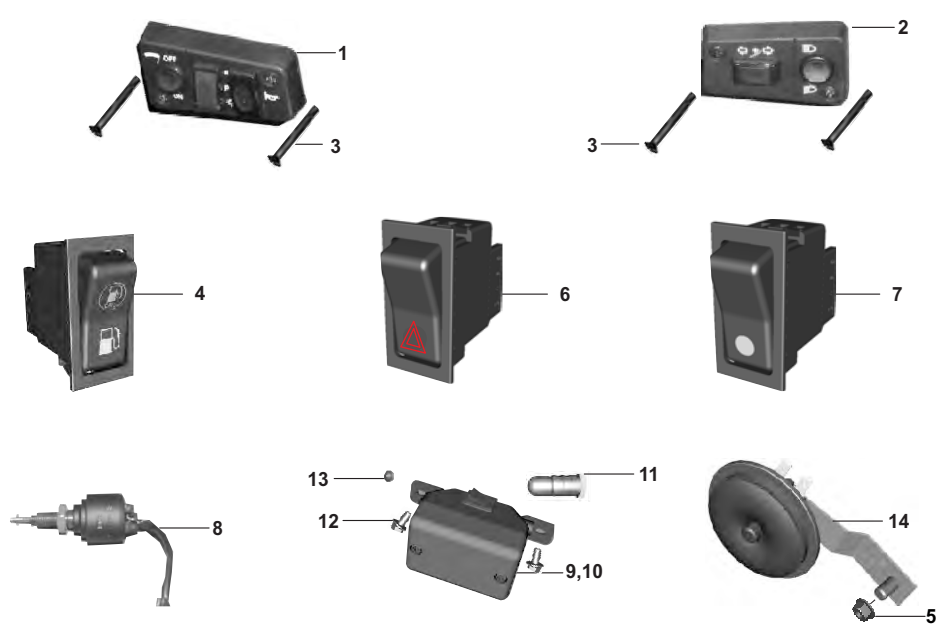

No.	Part No.	Description	LPG	PET	Remarks
1	AL 2010 60	Control Switch LH	1	1	
2	AM 2011 16	Control Switch RH	1	1	
3	AL 2010 62	Screw Switch	4	4	
4	RA 4014 00	Switch G O P Selection	1	–	
	AB 2010 77	Switch - Hazard Waring	–	1	
5	KC GA08 08	Nut Flanged	1	1	
6	AB 2010 77	Hazard Switch	1	1	
7	AL 2010 31	Switch 2 Position	1	1	
8	AF 2010 94	Brake Switch	1	1	
9	AL 2010 39	Lamp (Light) Assembly - Cabin	1	1	
10	AP 2010 58	Cabin Light Assembly(RE DI)	1	1	
11	24 2015 15	Bulb 12v,10w,capless Cab Lt	1	1	
12	LA D000 18	Bolt Flanged M5x0.8x10	2	2	
13	BH 1110 92	Grommet Wiring Harness	2	2	
14	AA 2012 39	Horn	1	1	

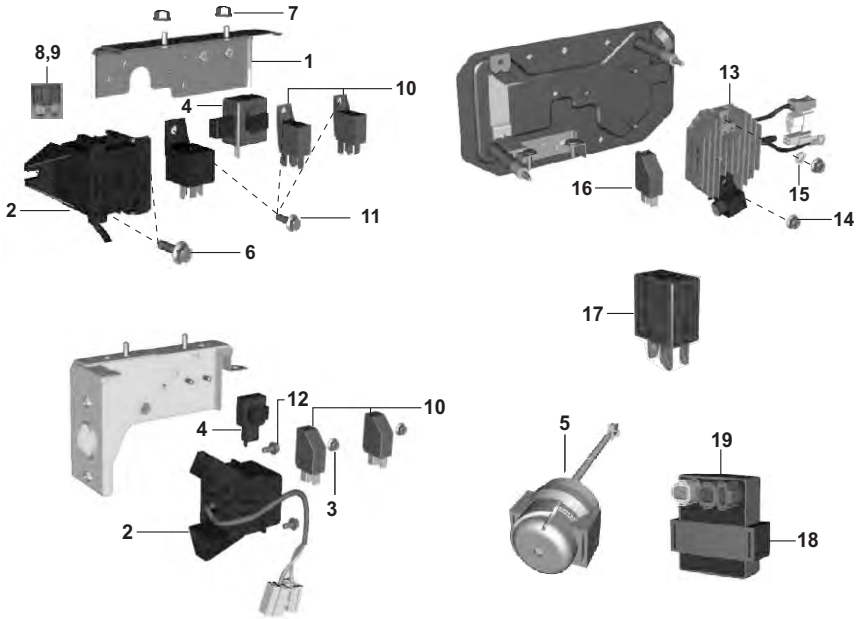

No.	Part No.	Description	LPG	PET	Remarks
1	AP 2010 37	Plate Electrical Units Front	1	1	
2	AN 2010 12	Fuse Box Assembly / Fuse	1	–	
	AA 2011 85	Box Assembly With Fuse	–	1	
3	KC GA05 05	Nut Hex Flanged	2	2	
4	AB 2010 76	Relay Flasher	1	1	
5	JN 3516 04	Starter Relay	1	1	
6	39 1773 04	Bolt Flanged M5x16	2	2	
7	KC GD06 06	Nut Hex Flanged	2	2	
8	AK 2010 12	Fuse Blade Type 10 Amp	6	6	
9	DG 2010 84	Fuse Blade Type 30 Amp	1	1	
10	AL 2010 12	Head Lamp Control Unit	2	2	
11	LA D000 18	Bolt Flanged M5x0.8x10	2	2	
12	KA DA05 10	Bolt Flanged	2	2	
13	AT 4020 06	Regulator	1	1	
14	KC GA06 06	Nut Hex Flanged	2	2	
15	KD CA06 12	Washer Spring	1	1	
16	AL 2010 12	Relay Head Light	4	4	
17	JL 4030 00	Interlock Relay	1	1	
18	AA 1111 20	Damper for CDI	1	1	

PLATE NO. 58 : ELECTRICAL UNITS
Maxima Z LPG & Petrol

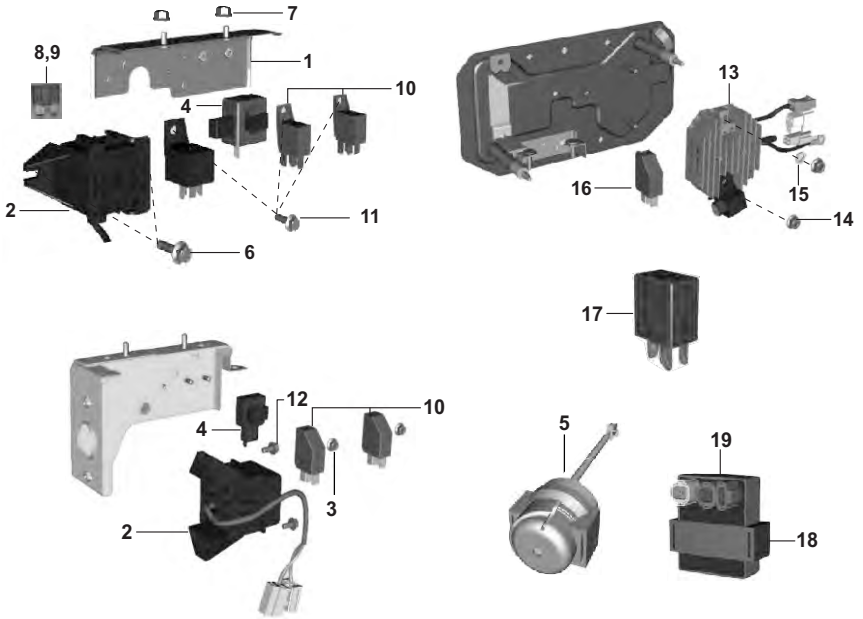

No.	Part No.	Description	LPG	PET	Remarks
19	RA 3512 07	CDI Assembly	1	–	
	AN 1110 54	CDI Assembly	–	1	(Nigeria)
	AN 1110 52	CDI Assembly	–	1	(other than Nigeria)
	AN 1110 78	CDI	–	1	Euro II

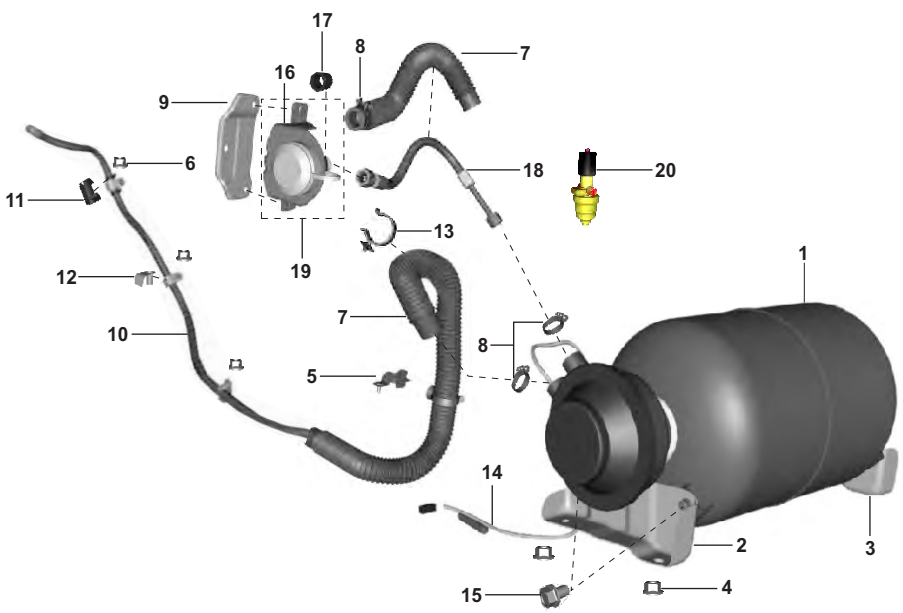

No.	Part No.	Description	LPG	PET	Remarks
1	RA 1720 56	Cylinder Assembly	1	–	
2	RA 1720 51	Bracket Cylinder Mtg-RH	1	–	
3	RA 1720 50	Bracket Cylinder Mtg-LH	1	–	
4	LC L000 01	Nut Hex Flange-m10	4	–	
5	RA 1720 47	Assembly Bracket Hose Mtg	1	–	
6	KC GA06 06	Nut Hex Flanged	8	–	
7	RA 1720 63	Hose Vent	2	–	
8	BF 1721 11	Clamp Vent Pipe	3	–	
9	RA 1720 42	Reinforcement LPG Filling Mtg	1	–	
10	RA 1720 22	Assembly Hose Mfv To Lpr	1	–	
11	BF 1721 03	Packing Rubber Metal Clamp	3	–	
12	AZ 1720 74	Clamp Assembly	3	–	
13	BF 1721 17	Clamp LPG Vent Pipe	2	–	
14	RA 1720 57	Assembly Valve Multifunction	1	–	
15	KA DD08 12	Bolt Flanged	4	–	
16	RA 1720 31	Assembly Bkt Filling Unit Mtg	1	–	
17	RA 1720 41	Bush Rubber LPG Hose	1	–	
18	RA 1718 00	Assembly Hose Mfv To Filling	1	–	

PLATE NO. 59 : CYLINDER FOR LPG VEHICLES | Maxima Z LPG & Petrol

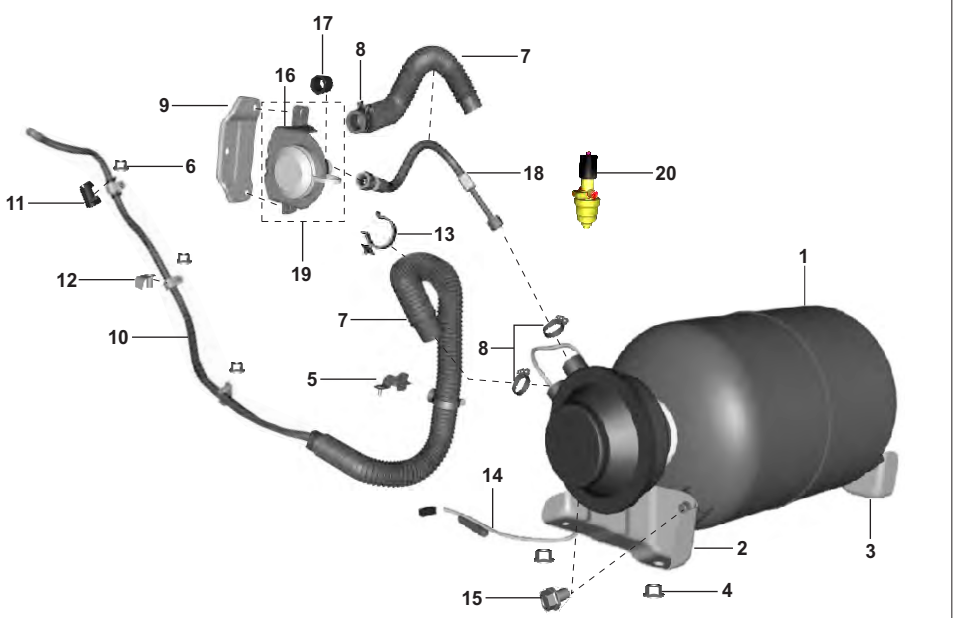

No.	Part No.	Description	LPG	PET	Remarks
19	RA 1720 32	Assembly Filling Valve	1	–	
20	AT 1721 03	Solenoid Valve	1	–	

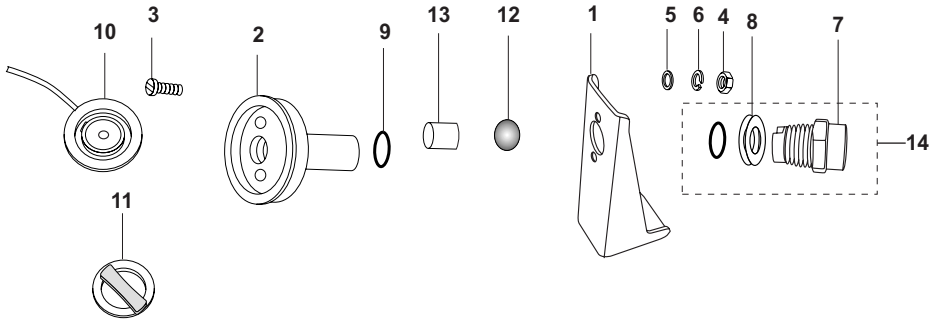

No.	Part No.	Description	LPG	PET	Remarks
1	RA 1720 32	Assembly Filling Valve	1	–	
	24 1212 62	Connector Filler Unit-vanaz	1	–	
2	24 1212 45	Filler	1	–	
3	59 0100 10	Screw Csumk For Filter	2	–	
4	AF 1210 57	Nut	2	–	
5	AF 1210 58	Washer	2	–	
6	RA 1720 31	Assembly Bkt Filling Unit Mtg	1	–	
7	24 1213 37	Connecter For Filler	1	–	
8	AF 1210 85	Washer	1	–	
9	CX 1410 46	'O' Ring	1	–	
10	24 1213 94	Cap	1	–	
11	24 1213 93	Knob	1	–	
12	CX 1410 44	Steel Ball	1	–	
13	CX 1410 45	Spacer	1	–	
14	36 AF00 40	Kit Filler Valve	1	–	

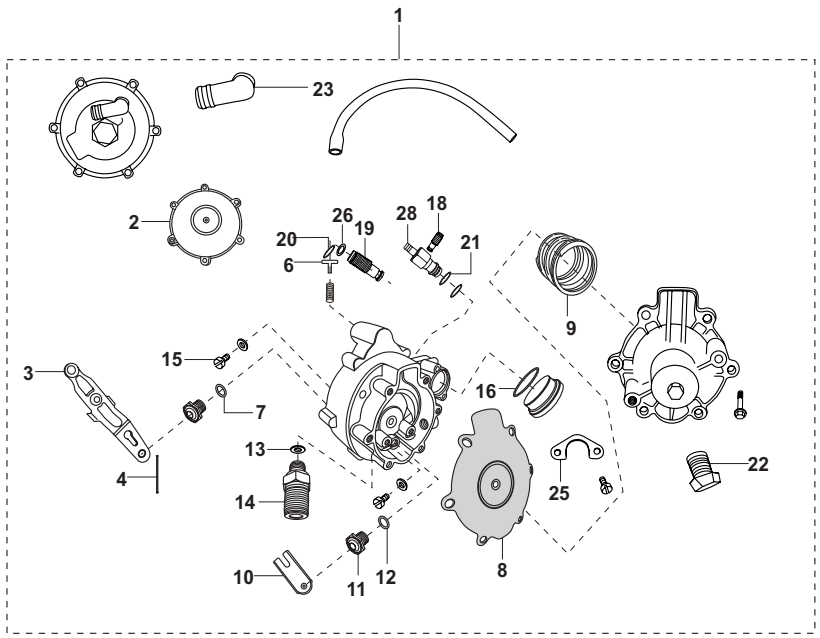

No.	Part No.	Description	LPG	PET	Remarks
1	RA 1720 75	Regulator LPG	1	–	
	RA 1720 78	Regulator LPG	1	–	For FL UG Model
2	JS 1720 15	Diaphragm-Sub Assembly	1	–	
3	JS 1720 36	Lever	1	–	
4	24 1212 99	Pin Lever	2	–	
5	36 AF00 37	Kit Primary LPR	1	–	N.I.
6	JS 1720 35	Guide Spring	1	–	
7	24 1213 06	Rubber Washer	1	–	
8	JS 1720 23	Diaphragm	1	–	
9	JS 1720 27	Spring	1	–	
10	24 1213 12	Lever Sub Assembly (1st Stage)	1	–	
11	24 1213 13	Seat 1st Stage	1	–	
12	24 1213 14	Rubber Washer 1st Stage	1	–	
13	24 1213 15	Washer Copper	1	–	
14	JS 1720 28	Connecter Inlet	1	–	
	AU 1720 66	Connector Inlet	1	–	For FL UG Model
15	AF 1210 70	Screw - Cheese Head	4	–	
16	24 1213 21	O-Ring For Flow	1	–	
17	36 AF00 39	Kit "O" Ring	1	–	N.I.

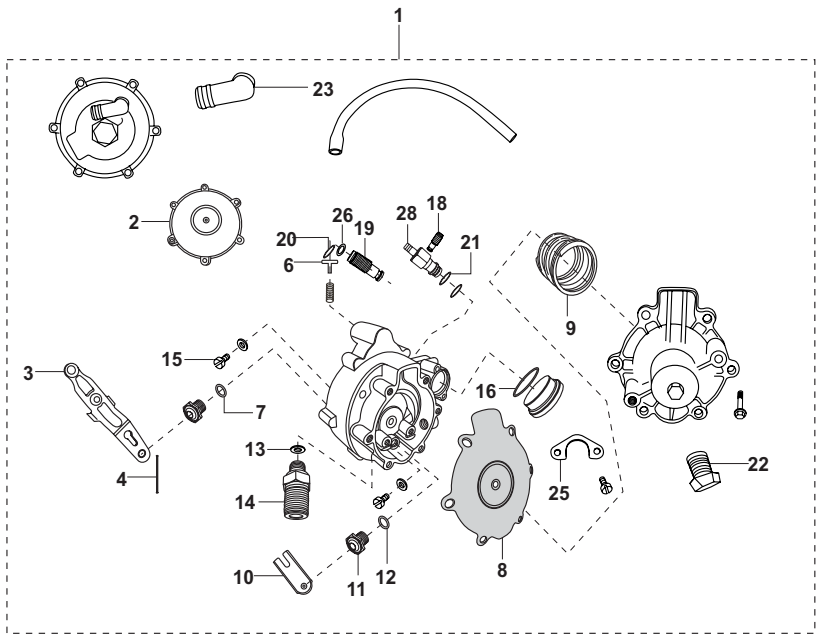

No.	Part No.	Description	LPG	PET	Remarks
18	24 1215 06	Screw Flow Adjusting	1	–	
	AF 1215 55	Screw Flow Control	1	–	Ref.Cir.IB-282
	RA 1720 92	Screw Flow Control	1	–	For FL UG Model
19	JS 1720 20	Screw Idle	1	–	
20	59 2100 17	O-Ring	1	–	
21	AF 1211 06	Ring - O	1	–	
22	JS 1720 26	Breather - I	1	–	
23	JS 1720 31	Breather - II	1	–	
24	36 AF00 38	Kit Secondary LPR	1	–	N.I.
25	JS 1720 33	Clamp	1	–	
26	AF 1211 04	Ring - O	1	–	
27	JS 1720 19	Flange Screw	12	–	N.I.
28	24 1215 07	Body-Flow Control	1	–	
	AF 1215 54	Body Flow Control	1	–	For FL UG Model

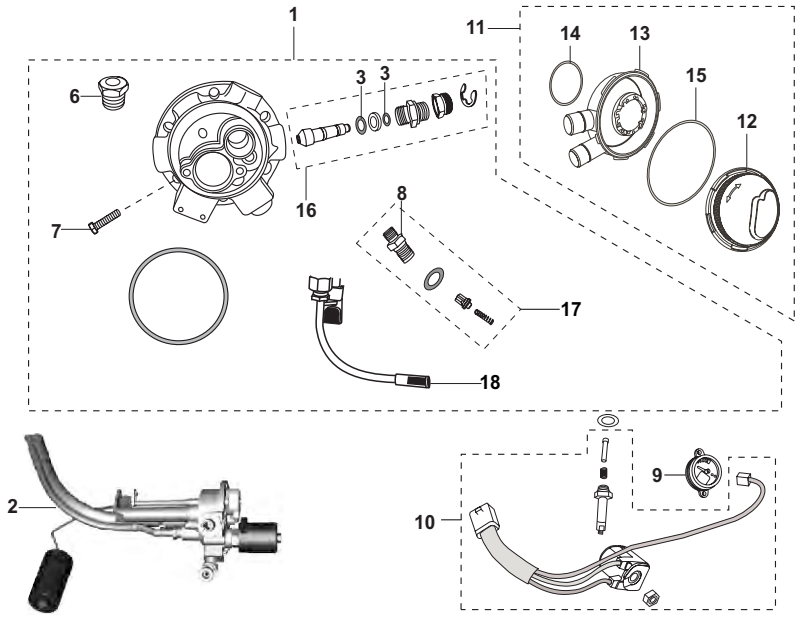

No.	Part No.	Description	LPG	PET	Remarks
1	AU 1720 02	Valve - Multi Function	1	–	
2	RA 1720 57	Assembly Valve Multifunction	1	–	
3	59 2100 13	O-Ring MFV-M/S.Vanaz LPG Kit	2	–	
4	36 AF00 42	Kit_MFV 80% Assembly	1	–	N.I.
5	24 1212 83	Washer Sealing MFV	1	–	N.I.
6	AU 1720 52	Plug Fusible With Alloy	1	–	
7	AU 1720 74	Screw Allen	6	–	
8	AU 1720 66	Connector -inlet	1	–	
9	RA 4026 03	Gauge LPG	1	–	
10	RA 1720 59	Valve Solenoid LPG	1	–	
11	24 1214 18	Seal Box Assembly Zero Deg. Mv	1	–	
12	24 1212 49	Case Upper For Seal Box	1	–	
13	AU 1720 34	Case -lower	1	–	
14	59 2100 12	O-Ring Bottom For Seal Box	1	–	
15	24 1212 50	O-Ring Top For Seal Box-m/s	1	–	
16	36 AF00 41	Kit MFV Manual Service Valve	1	–	
17	36 AF00 42	Kit MFV 80% Assembly (AU172002)	1	–	
18	24 1212 68	Filter	1	–	
19	24 1213 16	Connector Inlet LPG Vanaz	1	–	N.I.

Sr. No.	Kit Part No.	Kit Description	Consisting of Following Parts		
			Part No.	Description	Qty./Kit
1	36AZ0023	KIT BAR SHAFT	BF551803	RE BF551803 BAR SHAFT LH/RH	1
			BH551410	CIRCLIP	2
			BH551415	BOOT CLAMP LARGE	2
			BH551417	BOOT CLAMP SMALL	2
			BB133110	BOOT CV SHAFT	2
2	36BH0019	KIT ROLLER	BH551412	FINISHED ROLLER	3
3	36BH0037	KIT_BOOT & RETAILNER WITH	BB133110	BOOT CV SHAFT	1
			BH551415	BOOT CLAMP LARGE	1
			BH551417	BOOT CLAMP SMALL	1
			BH551423	GREASE	1
			BH551413	RETAINER SHEET	1
			BH551414	BOOT INSERT	1
4	36BH0036	KIT_BOOT WITH NEW BOOT	BB133110	BOOT CV SHAFT	1
			BH551415	BOOT CLAMP LARGE	1
			BH551417	BOOT CLAMP SMALL	1
			BH551423	GREASE	1
5	36AF0037	KIT_PRIMARY LPR	24121299	PIN LEVER	2
			JS172023	DIAPHRAGM	1
			24121312	LEVER SUB ASSY. (1ST STAGE)	1
6	36AF0038	KIT_SECONDERY LPR	JS172015	DIAPHRAGM-SUB ASSLY.	1
			JS172036	LEVER	1
			JS172035	GUIDE SPRING	1
			24121304	SPRING	1
7	36AF0039	KIT_"O" RING	24121321	O_RING FOR FLOW CONTROL	1
			59210017	O_RING	1
			AF121106	RING - O	1
			AF121104	RING - O	1
			AM121089	RING -O	2
8	36AF0041	KIT MFV MANUAL SERVICE VALVE	36244005	KIT SPINDLE WITH PAD FOR MFV	1
			AF121069	WASHER	1
			24121266	RETAINER MFV	1
			59210013	O_RING MFV	2
			24121267	KNOB MFV	1
			59170007	CIRCLIP EXTERNAL MFV	1
9	36AF0042	KIT_MFV 80% ASSEMBLY.	AU172041	MAGNET -LEVEL INDICATOR	1
			AU172042	LEVER 80% FILL LIMITER	1
			AU172043	FLOAT ROD GUIDE	1
10	36BH0008	KIT OBJ	BH551408	OBJ TULIP	1
			BH551415	BOOT CLAMP LARGE	1
			BH551417	BOOT CLAMP SMALL	1
			BH551423	GREASE	1
11	36BH0010	KIT OBJ & TRIPOD MAX	BH551408	OBJ TULIP	1
			BH551415	BOOT CLAMP LARGE	1
			BH551417	BOOT CLAMP SMALL	1
			BH551423	GREASE	1
			BH551412	FINISHED ROLLER	3
			BH551411	TRIPOD FINISHED	1

Sr. No.	Kit Part No.	Kit Description	Consisting of Following Parts		
			Part No.	Description	Qty./Kit
			BH551410	CIRCLIP	1
12	36BH0030	KIT-KIT IBJ-DOUBLE CHAMFER	BH551426	IBJ TULIP	1
			BH551415	BOOT CLAMP LARGE	1
13	36BH0031	KIT_IBJ & TRIPOD DOUBLE CHAMFER	BH551426	IBJ TULIP	1
			BH551415	BOOT CLAMP LARGE	1
			BH551417	BOOT CLAMP SMALL	1
			BH551423	GREASE	1
			BH551412	FINISHED ROLLER	3
			BH551411	TRIPOD FINISHED	1
			BH551410	CIRCLIP	1
14	36RA0001	CYLINDER BLOCK PISTON ASSLY LPG - 236	RA521200	PISTON ASSEMBLY	1
			AZ521000	CYLINDER BLOCK COMPLETE	1
			61011910	PLASTIC CAP FOR GUDGEON PIN (BIG)	1
15	36RA0003	VALVE KIT 4S - 236	AZ511202	VALVE EXHAUST	1
			39103519	SEAL - OIL	2
			AZ511201	VALVE INTAKE	1
			31101019	COLLET	4
16	36AZ0049	KIT_CONNECTING ROD 4S -236	AZ531003	ROD CONNECTING	1
			DK101453	CRANK PIN	1
			39215320	BEARING - NEEDLE ROLLER :- 3 X 38 X 18	1
17	36RA0002	FRICTION PLATE KIT- 236	AN101491	PLATE FRICTION INNER	5
			AN101490	PLATE FRICTION OUTER	2
18	36RA0016	KIT CLUTCH COVER (AY541201)	AN101420	PIPE BREATHER	1
			AY541201	COVER CLUTCH	1
			AA101556	PLUG -COVER CLUTCH(PRE COAT)	1
19	36AZ0084	KIT CLUTCH COVER (AZ541217)	AZ541217	COVER CLUTCH	1
			BA102004	PLUG	1
			AN101420	PIPE BREATHER	1
20	36RA0013	CYL BLOCK PISTON ASSLY- PL,LPG	RA521200	PISTON ASSEMBLY	1
			AZ521004	BLOCK CYLINDER	1
21	36AN0034	KIT PISTON RING CARGO PETROL	RA521203	RING PISTON SECOND	1
			RA521204	RING PISTON OIL	1
			RA521202	RING PISTON TOP	1
22	36AZ0052	ASSLY CYL. HEAD_VALVE 4S 236 BS4	AZ511202	VALVE EXHAUST	1
			AZ511002	CYLINDER HEAD COMPLETE	1
			AZ511201	VALVE INTAKE	1
			39103519	SEAL - OIL	2
			AA101875	SPRING VALVE	2
			28101129	SPRING - SEAT	2
23	36RA0006	JET KIT- MAXIMA Z 4S	JE581205	JET PILOT BS26	1
			AA121295	MAIN JET-55	1
			AF121452	JET HOLDER	1
			AA121152	NEEDLE JET	1
24	36RA0004	KIT PISTON VALVE ASSLY MAX Z 4S	DD121055	SPRING	1

Sr. No.	Kit Part No.	Kit Description	Consisting of Following Parts		
			Part No.	Description	Qty./Kit
			JZ581223	PACKING JET NEEDLE VM22 DISCO-H	1
			AZ581229	JET NEEDLE	1
			DD121054	RING - E	1
			AA121284	HOLDER	1
			AN121139	PISTON VALVE	1
			24121370	RING	1
25	36RA0007	KIT FLOT CHAMBER BODY-MAX Z 4S	JA581232	O-RING(FCB)	1
			JA581314	DRAIN SCREW	1
			CB121046	SCERW	4
			DH121118	O' RING	1
			AF121445	FLOAT BODY ASSLY	1
26	36RA0005	KIT PILOT SCREW-MAXIMA Z 4S	DH121088	RING - O	1
			DH121130	CARBURETTOR O RING(PS)	2
			DH121086	SPRING (CO)	1
			DH121087	WASHER	1
			AZ581230	ADJUSTER	1
27	36244042	KIT ST LOCK (24181016) WITH KEY - SMALL	24181020	KEY SET - 1000 COMBINATION	1
			24181016	LOCK - STEERING :- 1000 COMBINATIONS	1
28	36AA4028	KIT IGNITION SWITCH(AA201254) WITH KEY	24181020	KEY SET - 1000 COMBINATION	1
			AA201254	IGNITION CUM STARTER SWITCH	1
29	36AZ0051	DOOR FUEL FILLING LOCK WITH KEY	AZ244010	PANEL DOOR REAR LOWER	1
			24181020	KEY SET - 1000 COMBINATION	1
30	36AA4070	KIT 3W DRIVER SEAT ENCLOSURE	52AA0482	ASSLY DRIVER SEAT ENCLO. WITH CLIPNUT	1
			52AA0499	SET OF HARDWARE FOR DRIVER SEAT ENCL	1
			24231806	BRACKET	2

KIT LIST

Maxima Z LPG & Petrol

Sr. No.	Kit Part No.	Kit Description	Consisting of Following Parts		
			Part No.	Description	Qty./Kit

Page no.	Fig. no.	Old part no.	New part no.	Description	Updation date	Remarks
9	1	AZ511002	36AZ0052	Assly Cyl. Head Valve	08.03.19	Updation Alternate
6	1	----------	AA102209	Cover Differential	25.07.19	Added Ref.Cir.IB-267
6	12	----------	AA102210	Gasket Cover Differential	25.07.19	Added Ref.Cir.IB-267
3	14	----------	LCA00018	Nut Hex-m10x1.5xht	25.07.19	Added Ref.Cir.IB-267
55	35	39079012	39183012	Washer - Spring	29.07.19	Alternate Updation
43	5	----------	BH151096	Race Outer Lower	06.08.19	Added ECR
43	3	----------	BH151097	Race Inner Lower	07.08.19	Added ECR
43	11	----------	BH151094	Cover Bearing Upper	07.08.19	Added ECR
3	1	----------	RA541001	Crankcase Magneto Side	04.09.19	Added Ref.Cir.IB-274
79	17	----------	AF121554	Body Flow Control	14.09.19	Added Ref.Cir.IB-282
80	18	----------	AF121555	Screw Flow Control	14.09.19	Added Ref.Cir.IB-282
80	18	----------	RA172092	Screw Flow Control	14.09.19	Added Ref.Cir.IB-282
49	5	----------	24151299	Reservoir Oil Brake	20.09.19	Added Ref.Cir.IB-285
72	41	----------	AY113809	Cap LH	28.04.21	Added
72	42	----------	AY113810	Cap RH	28.04.21	Added
77	33	----------	AY191011	Assly Seat Passenger RH	28.04.21	Added
77	34	----------	BH191086	Assly Seat Passenger LH	28.04.21	Added
78	8a	----------	52BH0443	Assly Hood Black	28.04.21	Added
78	8a	----------	52BH0444	Assly Hood White	28.04.21	Added
78	8a	----------	52BH0445	Assly Hood Yellow	28.04.21	Added
78	8a	----------	52BH0446	Assly Hood Mushroom	28.04.21	Added
28	9a	----------	AF161281	Isolator	08.06.21	Added Ref.Cir.IB-324
42	18	----------	AF101743	Bracket Pipe Cooler Oil	07.12.21	Added Ref.Cir.IB-335
42	19	----------	KADD0514	Bolt-Flange-kad St-d Dia	07.12.21	Added Ref.Cir.IB-335
45	13	----------	AZ131015	Wheel 3.00bx10h2	25.02.22	Added Ref.Cir.IB-340
45	15	----------	BH131029	Tyre 4.00-10 Tubeless	25.02.22	Added Ref.Cir.IB-340
45	16	----------	BF131417	Valve V2.03.4	25.02.22	Added Ref.Cir.IB-340

Amendment Sheet

Maxima Z LPG & Petrol

Page no.	Fig. no.	Old part no.	New part no.	Description	Updation date	Remarks

Part Number	Figure No.	Page No.
01100711	7	17
01100712	7	17
01100713	7	17
01100714	7	17
01180123	8	16
01190205	26	59
03100335	8	2
03170109	5	21
03190206	25	59
06191089	15	58
06221028	6	70
15101171	5	17
18201044	12	79
18201044	4a	81
20201029	3	81
21100711	6	17
21150422	2	52
21160417	10	28
21180307	31	59
21180308	32	59
22131014	5	18
22161221	9	69
22161221	6	81
22171007	6	45
22181058	30	59
23161305	11	21
24102046	7	8
24121069	12	30
24121245	2	87
24121249	12	90
24121250	15	90
24121262	1	87
24121268	18	90
24121283	5	90
24121299	4	88
24121306	7	88
24121312	10	88

Part Number	Figure No.	Page No.
24121313	11	88
24121314	12	88
24121315	13	88
24121316	19	90
24121321	16	88
24121333	31	38
24121333	9	40
24121337	7	87
24121365	11	30
24121393	11	87
24121394	10	87
24121418	11	90
24121476	21	6
24121476	5	32
24121476	10	40
24121477	13	32
24121477	7	37
24121506	18	89
24121507	28	89
24121508	10	30
24130105	8	3
24131003	7	21
24131007	3	21
24131008	4	21
24151087	2	53
24151090	4	53
24151092	7	53
24151093	8	53
24151094	3	53
24151097	9	53
24151098	10	53
24151113	28	50
24151114	29	50
24151146	10	49
24151147	9	49
24151148	11	49
24151164	25	50

Part Number	Figure No.	Page No.
24151168	16	50
24151170	20	50
24151171	8	49
24151172	17	50
24151173	19	50
24151174	5	49
24151175	15	50
24151177	22	50
24151178	6	49
24151179	14	50
24151181	21	50
24151182	18	50
24151183	23	50
24151232	2	54
24151234	5	52
24151245	7	49
24151274	1	58
24151289	6	53
24151290	5	53
24151291	1	53
24151299	5	53
24160924	9	28
24161003	8	28
24161176	12	51
24161368	7	64
24161371	8	64
24161373	11	64
24161443	11	47
24161446	7	61
24165132	11	69
24165214	3	69
24165215	38	72
24165230	9	61
24170431	13	34
24170507	12	44
24181047	12	47
24181067	28	59

Part Number	Figure No.	Page No.
24181074	8	58
24181161	9	58
24191098	13	58
24191098	14	58
24191099	12	58
24191101	16	58
24191105	7	58
24191184	10	58
24191185	11	58
24201484	16	79
24201485	13	79
24201486	14	79
24201487	9	79
24201488	10	79
24201502	19	80
24201503	20	80
24201504	8	79
24201515	11	82
24201523	17	79
24201525	17	67
24201564	2	57
24211026	4	75
24221033	31	71
24230198	19	65
24230198	27	76
24231336	5	61
24231475	19	68
24231615	5	67
24231616	6	67
24231625	11	67
24231641	7	67
24231772	9	78
24231775	10	78
24231806	17	76
24231871	13	78
28101022	6	19
28101129	7	13

Part Number	Figure No.	Page No.
28101141	15	8
30101236	30	6
30151039	2	8
30151059	3	3
30211005	19	40
31101018	6	13
31101019	5	13
31101173	4	15
31121006	13	19
31121041	11	34
31121041	21	35
31191032	9	30
31191032	11	60
33141007	8	36
33141008	9	36
36244042	6	61
36AA4018	18	23
36AA4028	24	65
36AA4070	15	76
36AA4074	16	30
36AA4075	19	31
36AA4100	20	31
36AA4143	28	50
36AF0037	5	88
36AF0038	24	89
36AF0039	17	88
36AF0040	14	87
36AF0041	16	90
36AF0042	4	90
36AF0042	17	90
36AH0003	19	50
36AH0004	18	50
36AH0010	26	50
36AH0011	29	50
36AN0034	4	10
36AY0004	15	30
36AY0005	21	31

Part Number	Figure No.	Page No.
36AY0006	14	30
36AZ0023	12	43
36AZ0049	12	15
36AZ0052	1	11
36AZ0059	1	5
36AZ0076	8	49
36AZ0078	8	49
36AZ0084	1	5
36BA4014	26	50
36BH0008	8	43
36BH0010	9	43
36BH0019	13	43
36BH0030	10	43
36BH0031	11	43
36BH0036	6	43
36BH0037	7	43
36JZ0016	17	31
36RA0002	3	20
36RA0003	15	13
36RA0004	15	30
36RA0005	21	31
36RA0006	14	30
36RA0007	16	30
36RA0013	1	10
36RA0014	1	11
36RA0016	1	5
39007104	7	51
39014608	5	54
39015108	6	56
39019811	8	22
39019811	7	23
39019811	9	51
39019811	33	59
39019911	4	54
39020111	3	58
39021111	26	65
39024811	18	4

Part Number	Figure No.	Page No.
39024811	19	12
39024811	15	28
39025111	7	28
39025811	13	67
39025811	5	79
39029115	10	51
39029615	14	3
39029615	12	28
39029615	6	46
39029615	5	58
39032615	16	67
39042606	19	9
39042606	5	22
39045411	6	69
39073001	3	19
39073212	11	48
39074011	23	38
39074601	16	2
39074801	4	19
39078912	5	46
39080411	11	22
39093915	15	46
39094111	18	58
39097315	12	13
39099206	34	7
39100006	3	2
39100006	22	6
39100006	11	8
39101321	2	2
39101321	2	19
39101421	16	14
39103519	3	13
39104119	3	5
39104619	21	9
39104619	4	22
39105411	4	46
39105515	14	2

Part Number	Figure No.	Page No.
39105515	18	12
39105515	8	54
39106504	23	6
39107901	12	48
39118011	6	26
39119704	7	22
39121111	3	23
39121111	3	51
39128321	10	11
39128321	16	12
39130911	6	11
39130911	6	78
39135315	7	78
39137704	2	58
39138904	11	53
39143520	3	8
39150111	12	78
39152301	6	64
39152301	18	65
39153721	18	6
39156015	5	81
39158511	16	8
39158721	10	21
39158721	10	60
39163015	10	41
39165721	8	19
39167204	9	41
39167604	10	2
39170207	6	54
39170415	25	65
39171619	7	3
39171619	9	3
39172104	25	6
39173719	14	48
39177304	6	83
39179021	14	14
39182612	9	22

Part Number	Figure No.	Page No.
39182612	6	23
39182912	13	3
39182912	14	28
39182912	4	58
39183012	14	21
39183012	8	51
39183012	35	59
39186420	4	3
39186919	6	8
39188020	2	14
39188515	8	15
39192707	5	15
39193120	14	15
39193815	11	20
39194404	2	51
39194404	8	81
39197215	5	64
39199020	33	6
39200811	5	20
39203804	9	48
39206004	15	22
39215320	15	15
39218106	2	10
39218106	17	12
39229515	12	26
39229515	11	56
39234911	16	22
39238315	2	81
39242411	19	27
39244311	8	5
39246417	18	48
39251604	3	46
39254220	4	14
39254717	29	6
39260715	14	44
39260801	20	12
39263101	23	59

Part Number	Figure No.	Page No.
39271115	14	70
52240645	1	67
52AY0018	1	61
52AY0019	1	70
52AY0131	33	77
52AY0135	34	77
52AY0159	37	72
52AZ0135	2	61
52AZ0174	7	70
52AZ0175	1	70
52AZ0176	18	73
52AZ0177	19	74
52AZ0178	5	70
52AZ0180	9	73
52BB0075	1	51
52BH0209	1	73
52BH0210	2	70
52BH0443	8a	78
52BH0444	8a	78
52BH0445	8a	78
52BH0446	8a	78
52RA0038	1	61
59010005	3	64
59010005	8	69
59010007	4	64
59010010	3	87
59040029	13	21
59040038	5	11
59050002	5	2
59050002	2	3
59150012	6	28
59200012	5	45
59210012	14	90
59210013	3	90
59210017	20	89
60111420	6	63
AA101009	15	20

Part Number	Figure No.	Page No.
AA101055	9	17
AA101058	10	18
AA101061	9	16
AA101084	10	22
AA101138	6	15
AA101139	7	15
AA101212	17	9
AA101213	6	20
AA101220	3	25
AA101221	15	2
AA101295	2	16
AA101424	3	15
AA101471	2	20
AA101472	4	20
AA101474	10	20
AA101665	3	22
AA101667	17	6
AA101667	13	8
AA101736	1	22
AA101742	9	21
AA101745	2	21
AA101747	16	21
AA101750	6	21
AA101814	6	14
AA101816	2	28
AA101819	6	22
AA101823	22	9
AA101826	12	5
AA101826	15	19
AA101826	15	41
AA101838	10a	11
AA101844	4	11
AA101868	4	16
AA101875	4	13
AA101883	26	6
AA101884	27	6
AA101939	32	6

Part Number	Figure No.	Page No.
AA101950	6	3
AA101953	3	26
AA102018	18	9
AA102026	1	8
AA102031	16	3
AA102055	15	5
AA102082	16	13
AA102087	5	10
AA102110	16	27
AA102114	8	26
AA102124	17	27
AA102151	11	40
AA102154	23	12
AA102154	16	33
AA102162	1a	20
AA102163	7	16
AA102164	5	16
AA102165	8	20
AA102166	7	20
AA102167	13	22
AA102193	15	27
AA102209	1	8
AA102210	12	8
AA102540	1	15
AA111049	8	23
AA111067	4	23
AA111079	11	23
AA111080	17	23
AA111081	12	23
AA111082	13	23
AA111083	20	24
AA111085	16	23
AA111094	14	23
AA111095	15	23
AA111118	10	23
AA111120	18	83
AA111148	12	25

Part Number	Figure No.	Page No.
AA111153	13	11
AA111202	1	25
AA111203	2	25
AA121147	6	32
AA121148	3	32
AA121149	4	32
AA121150	2	32
AA121226	2	30
AA121282	7	40
AA121291	8	40
AA121305	1	32
AA121336	16	19
AA131004	12	21
AA141046	7	30
AA141046	18	31
AA141067	18	25
AA141085	43	39
AA141098	32	38
AA141115	5	37
AA161190	4	69
AA161191	5	69
AA161215	1	64
AA161216	15	64
AA161218	27	65
AA161219	28	65
AA161225	21	65
AA161268	12	69
AA161269	13	69
AA161270	14	69
AA161290	31	65
AA161357	15	64
AA161383	1	28
AA161433	33	66
AA161435	34	66
AA161437	35	66
AA161438	36	66
AA161443	9	64

Part Number	Figure No.	Page No.
AA161446	1	64
AA161447	43	66
AA161448	44	66
AA161473	39	66
AA161474	40	66
AA161475	37	66
AA161476	38	66
AA161479	41	66
AA161480	8	64
AA181022	3	47
AA191032	6	58
AA191092	6	60
AA191113	1	56
AA191114	10	56
AA191115	7	60
AA191116	2	56
AA191117	3	56
AA191121	8	56
AA191122	9	56
AA201185	2	83
AA201239	14	82
AA201258	32	65
AA201262	7	79
AA201263	8	67
AA201264	4	79
AA201325	35	7
AA201331	13	56
AA201332	12	56
AA201341	16	65
AA201344	5	60
AA201362	17	65
AA201380	4	63
AA201391	3	63
AA201501	35	7
AA201515	23	65
AA210036	2	75
AA231223	10	67

Part Number	Figure No.	Page No.
AA231239	3	67
AA231409	32	66
AB101038	4	5
AB101067	3	16
AB111107	19	24
AB151049	3	52
AB151079	30	50
AB171016	10	46
AB181012	4	47
AB181020	13	47
AB181033	5	47
AB201076	4	83
AB201077	4	82
AB201077	6	82
AF101087	1	5
AF101421	1	11
AF101445	2	13
AF101482	2	26
AF101743	18	42
AF111021	1	23
AF111023	9	23
AF111031	14	25
AF111032	13	25
AF111033	15	25
AF111034	11	25
AF111035	17	25
AF121057	4	87
AF121058	5	87
AF121070	15	88
AF121085	8	87
AF121104	26	89
AF121106	21	89
AF121133	6	30
AF121505	1	32
AF121554	28	89
AF121555	18	89
AF161281	9a	28

Part Number	Figure No.	Page No.
AF201094	8	82
AF201207	5	63
AF221007	33	71
AF221022	32	71
AK201012	8	83
AL121062	2	32
AL121068	3	32
AL131055	7	18
AL131058	6	18
AL151007	16	48
AL151011	13	48
AL151012	10	48
AL151052	31	50
AL151053	27	50
AL151054	24	50
AL151089	8	48
AL161236	7	69
AL161392	3	61
AL161502	10	64
AL161503	9	64
AL161509	4	70
AL171051	14	46
AL171058	16	46
AL171081	11	46
AL171091	8	46
AL171093	7	46
AL171095	9	46
AL171104	13	46
AL191020	9	60
AL201012	10	83
AL201012	16	83
AL201031	7	82
AL201034	2	36
AL201039	9	82
AL201060	1	82
AL201062	3	82
AL201070	22	59

Part Number	Figure No.	Page No.
AL201100	23	65
AL201119	1	79
AL201120	2	79
AL241023	4	67
AL241395	23	74
AM101051	1	26
AM101052	2	26
AM101171	10	14
AM101172	11	14
AM101173	7	14
AM101174	9	14
AM121077	12	32
AM161020	31	71
AM201116	2	82
AN101062	11	3
AN101113	14	19
AN101113	14	41
AN101127	1	2
AN101129	11	2
AN101135	6	10
AN101147	13	13
AN101155	13	15
AN101166	10	14
AN101177	3	11
AN101182	8	14
AN101186	19	6
AN101188	12	19
AN101189	13	5
AN101190	9	19
AN101198	10	16
AN101200	11	16
AN101203	7	1
AN101238	15	3
AN101250	12	14
AN101257	11	14
AN101312	12	8
AN101323	3	14

Part Number	Figure No.	Page No.
AN101334	6	41
AN101339	10	17
AN101341	2	15
AN101347	12	17
AN101361	13	20
AN101376	7	5
AN101379	1	17
AN101406	2	18
AN101420	2	5
AN101432	1	21
AN101434	3	18
AN101435	4	18
AN101448	4	34
AN101472	1	26
AN101474	2	26
AN101478	3	26
AN101488	1	20
AN101489	14	20
AN101498	24	9
AN101581	1	26
AN101582	3	26
AN111043	10	25
AN111052	19	84
AN111054	19	84
AN111078	19	84
AN121242	14	40
AN121252	34	38
AN121259	36	38
AN131007	13	8
AN131007	7	11
AN131018	8	18
AN131022	20	9
AN141137	12	37
AN161074	4	57
AN161075	3	57
AN201012	2	83
AP101194	9	26

Part Number	Figure No.	Page No.
AP101220	4	25
AP101257	16	15
AP111023	12	22
AP121074	23	9
AP151002	5	48
AP151017	4	49
AP151031	7a	49
AP161047	20	59
AP201037	1	83
AP201058	10	82
AS230005	36	71
AT131406	5	62
AT172055	17	37
AT172103	20	86
AT402006	13	83
AT402212	5	63
AT531007	1	15
AT531008	13	15
AU172002	1	90
AU172034	13	90
AU172052	6	90
AU172066	14	88
AU172066	8	90
AU172074	7	90
AU511005	1	14
AU541007	1	3
AY113809	41	72
AY113810	42	72
AY171005	1	37
AY171009	33	38
AY171803	30	38
AY171806	40	39
AY171807	41	39
AY171811	24	38
AY171812	20	38
AY171813	29	38
AY171814	27	38

Part Number	Figure No.	Page No.
AY171815	18	37
AY171816	10	37
AY171818	38	38
AY191007	2	75
AY191008	2	75
AY191010	10	75
AY402204	1	63
AY402205	2	63
AY501007	1	1
AY511200	1	14
AY581003	8	32
AY581200	1	30
AY581202	1	30
AY581400	9	11
AZ111109	3	57
AZ111112	4	57
AZ111154	8	57
AZ113406	1	28
AZ113415	1	28
AZ113419	11	28
AZ113450	11	28
AZ122005	3	44
AZ122007	4	44
AZ122008	8	44
AZ122009	9	44
AZ122016	6	44
AZ122032	2	44
AZ122033	1	44
AZ131004	13	45
AZ131005	2	62
AZ131015	13	45
AZ131403	10	62
AZ131404	4	62
AZ131415	3	62
AZ131416	11	62
AZ131601	10	45
AZ131601	1	48

Part Number	Figure No.	Page No.
AZ131803	1	55
AZ131805	10	55
AZ131806	4	55
AZ131807	3	55
AZ131808	15	55
AZ131809	1	52
AZ131815	13	55
AZ131816	14	55
AZ131834	1	49
AZ131835	3	49
AZ131836	2	49
AZ141221	1	43
AZ161003	1	60
AZ161207	3	60
AZ161208	4	60
AZ161209	2	60
AZ161213	22	65
AZ161215	8	60
AZ161220	12	60
AZ171006	4	36
AZ171009	3	36
AZ171808	42	39
AZ171811	13	36
AZ171819	7	36
AZ171820	11	36
AZ171821	12	36
AZ171822	6	36
AZ171827	14	36
AZ171839	1	36
AZ171840	15	33
AZ172074	12	85
AZ181004	29	74
AZ181005	32	74
AZ181006	30	74
AZ181007	31	74
AZ181204	23	71
AZ181208	15	76

Part Number	Figure No.	Page No.
AZ181209	28	76
AZ181210	31	76
AZ181211	30	76
AZ181213	24	76
AZ181214	17	76
AZ181215	25	76
AZ181216	26	76
AZ181217	23	76
AZ181401	13	70
AZ182401	16	70
AZ182402	15	70
AZ182403	10	70
AZ185001	15	34
AZ185002	17	34
AZ185003	18	34
AZ185010	1	69
AZ186001	8	78
AZ191004	1	75
AZ191014	2	75
AZ191015	2	75
AZ191024	3	75
AZ211093	1	78
AZ211347	13	37
AZ231005	11	70
AZ231802	39	72
AZ231803	40	72
AZ233008	2a	69
AZ233009	2	69
AZ233012	28	71
AZ233013	27	71
AZ233014	29	71
AZ233015	30	71
AZ241029	33	74
AZ241031	34	74
AZ241039	24	74
AZ241401	22	74
AZ241402	21	74

Part Number	Figure No.	Page No.
AZ242002	26	74
AZ242003	27	74
AZ242004	25	74
AZ244017	2	73
AZ244026	16	73
AZ245000	12	73
AZ247000	10	73
AZ351010	2	25
AZ351209	9	25
AZ401001	1	81
AZ401002	1a	81
AZ402403	12	64
AZ501014	16	25
AZ511010	14	11
AZ511201	1	13
AZ511202	2	13
AZ511204	1	14
AZ511207	8	13
AZ511208	9	13
AZ521003	12	11
AZ531000	1	15
AZ551001	6	5
AZ551003	1	16
AZ551202	2	15
AZ551210	11	17
AZ551211	2	17
AZ551212	3	17
AZ551213	4	17
AZ551602	1	18
AZ551603	8	17
AZ551604	9	18
AZ552604	8	21
AZ571200	4	41
AZ571209	11	19
AZ571212	2	41
AZ571213	3	41
AZ571219	11	41

Part Number	Figure No.	Page No.
AZ571220	12	41
AZ571226	1	41
AZ571227	8	41
AZ571228	4	41
AZ571231	12	41
AZ571232	11	41
AZ581009	11	32
AZ581018	10	34
AZ581024	5	34
AZ581033	14	34
AZ581034	1	34
AZ581047	20	6
AZ581047	18	33
AZ581075	3	34
AZ581111	1	32
AZ581220	8	30
AZ581224	1	30
AZ581409	9	11
AZ582200	2	40
AZ582400	6	40
AZ582405	17	13
AZ601403	7	25
AZ601405	8	1
AZ601408	2	1
AZ601409	3	1
AZ601410	6	1
AZ601413	5	1
AZ601414	4	1
AZ601421	6	25
BA102004	16	5
BA132045	6	16
BA132141	2	22
BA171007	11	44
BA171008	10	44
BA201067	1	57
BB121029	6	32
BB161244	18	70

Part Number	Figure No.	Page No.
BB161245	19	71
BB171036	13	44
BB181034	10	47
BB181035	9	47
BB181036	8	47
BB201070	6	79
BB221004	8	70
BB221015	11	51
BB221017	16	69
BB221018	15	69
BF131417	16	45
BF131707	14	43
BF131707	11	45
BF131710	4	48
BF131722	4	45
BF131723	3	45
BF131887	11	37
BF161137	7	55
BF161138	9	55
BF161175	8	55
BF161296	14	56
BF172103	11	85
BF172111	8	85
BF172117	13	85
BF172126	19	36
BF185019	6	51
BF241152	17	70
BF241152	22	76
BF247003	6	57
BF403407	42	66
BF551613	10	3
BF551613	5	8
BG113804	7	52
BG581006	14	33
BH111056	15	47
BH111071	18	67
BH111092	13	82

Part Number	Figure No.	Page No.
BH113411	9a	28
BH121002	16	47
BH121004	1	46
BH121005	2	46
BH122028	5	44
BH122039	2	44
BH122040	1	44
BH131006	1	49
BH131009	15	45
BH131010	14	45
BH131011	7	49
BH131019	1	62
BH131021	3	48
BH131023	10	45
BH131023	1	48
BH131024	17	48
BH131029	15	45
BH131206	12	45
BH131212	3	49
BH131213	2	49
BH131217	1	45
BH131220	2	45
BH131407	12	62
BH131600	6	48
BH131803	12	53
BH131804	6	52
BH131813	12	49
BH131814	13	49
BH131817	5	51
BH151007	2	47
BH151008	7	47
BH151009	6	47
BH151062	1	47
BH151065	14	47
BH151066	29	59
BH151094	11	47
BH151096	5	47

Part Number	Figure No.	Page No.
BH151097	3	47
BH161017	9	54
BH161019	1	54
BH161027	3	54
BH171813	6	37
BH171814	9	37
BH181402	12	70
BH181405	20	71
BH181406	21	71
BH184000	2	67
BH191019	3	75
BH191032	8	75
BH191061	9	75
BH191075	1	75
BH191077	14	75
BH211051	14	73
BH211057	17	73
BH211077	4	61
BH211158	7	73
BH211163	6	73
BH211165	5	73
BH211201	24	71
BH241800	12	73
BH401016	9	81
BH402607	2	37
BH551409	5	43
BH551420	3	43
BH551421	4	43
BH551800	11	18
BH551800	2	43
BH581010	6	34
BH581010	9	34
BH581024	8	34
BH581025	12	34
CE181015	2	64
CL201023	3	79
CM101129	18	27

Part Number	Figure No.	Page No.
CM191049	17	58
CM201054	13	64
CS141005	5	36
CX141044	12	87
CX141045	13	87
CX141046	9	87
DD101062	15	14
DD121013	10	36
DD141227	22	38
DG101263	2	34
DG101498	13	2
DG121040	15	40
DG141019	4	40
DG201084	9	83
DH101141	5	5
DH101180	9	5
DH101275	11	5
DH101795	12	20
DH191037	14	64
DJ181065	18	76
DK101064	9	14
DK101097	11	15
DK101237	1	19
DK101237	16	41
DK101277	17	42
DK101278	18	42
DK101340	13	41
DK101449	31	6
DK101472	28	6
DP101154	9	2
DS101277	13	14
DS161125	4	51
DS161224	12	40
DU101223	12	2
DX101074	14	13
EC131835	8	52
EC541004	10	19

Part Number	Figure No.	Page No.
GF101139	10	1
GF141020	25	38
GF141027	26	38
GF161156	25	71
GH201012	4	81
JA541019	5	19
JA541020	7	19
JA581221	13	30
JA581223	22	31
JD401032	11	79
JD401032	10	81
JE581416	22	12
JE582602	17	40
JE582603	16	40
JE582604	13	40
JE591002	4	26
JE591002	9	26
JF581209	5	30
JF581209	9	32
JG171029	16	37
JG541230	7	11
JG581015	16	34
JH511207	10	13
JL171096	21	38
JL403000	17	83
JL511227	11	13
JN351604	5	83
JS172015	2	88
JS172019	27	89
JS172020	19	89
JS172023	8	88
JS172026	22	89
JS172027	9	88
JS172028	14	88
JS172031	23	89
JS172033	25	89
JS172035	6	88

Part Number	Figure No.	Page No.
JS172036	3	88
JU581006	10	32
JY171070	19	37
JY171090	28	38
KAAA0516	15	67
KAAA0518	4	37
KAAA0525	12	67
KAAA0825	2	78
KAAD0520	34	59
KAAD0525	9	20
KAAD0525	34	59
KACA0614	18	13
KACA0645	39	39
KACC0835	2	23
KACH0835	2	23
KADA0510	12	83
KADA0512	15	21
KADA0610	14	37
KADA0612	20	68
KADA0614	3	28
KADA0816	11	75
KADD0514	19	42
KADD0530	14	22
KADD0612	7	26
KADD0612	7	34
KADD0612	7	41
KADD0612	10	69
KADD0612	9	70
KADD0612	7	81
KADD0620	19	34
KADD0630	6	62
KADD0812	15	85
KADD0814	5	23
KADD0816	8	37
KADD1030	4	52
KADD1030	11	53
KADD1030	7	54

Part Number	Figure No.	Page No.
KADF0616	15	73
KADF0816	11	73
KAED0614	17	4
KAED0618	20	35
KAED0620	3	40
KAED0622	11	11
KAED0625	9	1
KAED0625	10	5
KAED0625	17	14
KAED0625	5	41
KAED0630	11	1
KAED0640	23	6
KAED0665	19	4
KAED0665	24	6
KAEW0635	12	3
KBAC0614	8	61
KBBA0525	30	65
KBCA0614	9	45
KBCA0614	2	48
KBRA4219	12	81
KBRA4819	18	40
KBRA4819	11	78
KBRC3516	18	79
KBRC3519	15	79
KBUA0612	34	71
KBUA0614	20	76
KBUA0620	5	78
KBUC0614	20	74
KBUC0614	20	76
KBUC0620	28	74
KCAC0504	32	77
KCAD1008	16	44
KCBD1006	15	44
KCEA0605	16	76
KCGA0505	14	67
KCGA0505	22	71
KCGA0505	7	75

Part Number	Figure No.	Page No.
KCGA0505	3	83
KCGA0606	4	30
KCGA0606	15	36
KCGA0606	5	57
KCGA0606	35	71
KCGA0606	6	75
KCGA0606	14	83
KCGA0606	6	85
KCGA0808	11	55
KCGA0808	5	75
KCGA0808	5	82
KCGC0606	4	73
KCGC0606	21	76
KCGD0606	17	36
KCGD0606	35	38
KCGD0606	11	81
KCGD0606	7	83
KCGD0808	5	26
KCGD0808	17	33
KCGD0808	18	36
KCGD0808	20	65
KCHA1417	7	44
KCKA0609	26	71
KCKA0811	5	28
KCKA0811	4	78
KCKC0811	12	75
KDAA0408	7	56
KDAA1222	4	56
KDBA0512	3	37
KDBA0818	4	28
KDBA0818	16	36
KDBB0512	29	65
KDBB1022	3	78
KDBC0818	3	73
KDBC0818	19	76
KDCA0612	15	83
KEAA1010	5	55

Part Number	Figure No.	Page No.
KEBB4217	7	2
KEBB5520	7	45
KECA0415	8	73
KHAA2018	5	56
KHAA2025	2	55
KHAA2512	9	49
KHAA3228	8	62
KHAE2012	7	57
KHBB0828	9	62
KHDA0306	5	14
KJAA2024	7	48
KJAB1424	14	8
KJAB1424	8	11
KJAC1824	15	11
KPAF6004	6	2
KPBB6007	4	8
KPBC6004	15	48
KPBF6305	5	3
LAA00022	8	8
LAA00033	13	75
LAA00048	29	76
LAC00008	9	67
LAC00025	5	25
LAC00035	8	45
LAD00018	24	59
LAD00018	12	82
LAD00018	11	83
LAD00035	9	8
LAD00062	4	2
LAD00062	21	12
LAD00064	13	73
LAD00068	13	26
LAD00072	15	37
LAD00124	10	15
LAD00136	10	54
LAD00164	16	29
LAD00178	7	62

Part Number	Figure No.	Page No.
LAD00216	13	28
LAE00019	19	42
LAE00045	11	26
LAG00008	14	27
LAH00001	8	25
LAJ00001	10	8
LAJ00016	2	11
LBC00004	14	5
LBU00009	3	70
LBU00063	21	59
LCA00018	14	3
LCG00017	18	29
LCL00001	4	85
LDA00002	6	55
LDA00028	10	26
LDA00032	12	55
LDB00047	9	15
LDB00049	17	29
LDB00074	27	59
LHC00001	19	58
LJA00003	3	30
LJA00024	37	38
LJA00025	12	46
PA111250	5	40
PD511229	7	14
PD582200	1	40
RA171800	18	85
RA172022	10	85
RA172031	16	85
RA172031	6	87
RA172032	19	86
RA172032	1	87
RA172041	17	85
RA172042	9	85
RA172047	5	85
RA172050	3	85
RA172051	2	85

Part Number	Figure No.	Page No.
RA172056	1	85
RA172057	14	85
RA172057	2	90
RA172059	10	90
RA172063	7	85
RA172075	1	88
RA172078	1	88
RA172092	18	89
RA351207	19	84
RA401400	4	82
RA402212	1	63
RA402222	2	63
RA402230	2	63
RA402602	17	65
RA402603	9	90
RA501006	1	1
RA501013	1	1
RA521200	3	10
RA541001	1	3
RA581015	8	32
RC113801	7	32
YAZ08003	4	49
YAZ08008	15	50
YAZ08009	14	50
YAZ08012	25	50

Part Number	Figure No.	Page No.