BAJAJ pulsar DTS-i 150 BS IV

BAJAJ MOTORCYCLES

BAJAJ pulsar DTS-i 150 BS IV

Bajaj Auto Limited
Akurdi Pune 411 035 India

Spare Parts Catalogue



Notice

All information contained in this manual is based on the latest product information at the time of publication. Bajaj Auto Limited accepts no liability for any inaccuracies or omissions in this publication, although every possible care has been taken to make it as complete and accurate as possible. All procedures and specifications subject to change without prior notice. The right is reserved to make such changes at any time without prior notice and without incurring an obligation to make such changes to product manufactured previously. Contact your authorized Bajaj Dealer for the latest information on product improvements incorporated after this manual was issued.

DOC. NO.: XXXXXXX REV. 00, MARCH 2017

Foreword

We have pleasure in presenting the Spare Parts Catalogue for '**Pulsar DTS-i 150 CC BSIV '** Motorcycle. This catalogue has been specially designed to assist you in selecting the correct parts for procurement to maintain 100% availability.

The Bajaj spares are subjected to the stringent quality control standards to ensure longer life of the vehicle. It is therefore necessary that only the Genuine Bajaj Spares are used.

In a continual effort to improve Performance and Efficiency of the vehicles, Specifications, Diagrams, Illustrations and Part Numbers can change without notice. Consequently, the description in this Spare Parts Catalogue cannot therefore be final and binding on us.

The modifications / alterations which are carried out after the issue of this catalogue, will be conveyed to you through our Service Circulars. You are requested to make necessary corrections in the Parts Catalogue as per the circulars so as to keep your catalogue up-to-date. This will ensure the appropriate and speedy delivery of the Spare Parts as the order placed will bear the latest part numbers.

In case, if you need any technical assistance contact the concerned Regional Office or write to us on the following address :

Bajaj Auto Limited
International Business
Akurdi, Pune 411 035 India

Instructions

BAJAJ Pulsar DTS-i 150 BS IV

1. How to Read the Catalogue : Open the catalogue and from the pictorial index locate the group in which the part you want to find is present. Turn over to the concerned page number (as given by pictorial index). Now find out the figure of the part you wish to order. Write down the part number against that particular figure number from the text.

   In case, if you have the part number and you need the other details, the part index can be used. The part index (at the end of the catalogue) will give you the figure and page number of the part you wish to order.

2. How to Order Spare Parts : The part number and the description of the part required should be invariably mentioned in the order as per the catalogue text.

   The latest part number as conveyed through our service circulars should only appear on the order. In case of ordering painted components, colour shade of the components should be mentioned.

   The quantity shown against the part number is the quantity per vehicle for that group so that particular quantity should be multiplied by the number of sets required.

3. Part Number System : We have used 8 digit system for part numbers. The model or hardware item is indicated by first two digits or alphanumeric, the next two or four digits indicate main group and the last four or two digits indicate serial number in main group or serial number or subgroup of fastener respectively. Thus the part numbers will be indicated by 2-2-4 or 2-4-2 digit system. Understanding this system will enable you to identify the spare parts easily.

4. Abbreviations : The following abbreviations are used in this catalogue.

Assly	Assembly	V	Volts
N.I.	Not illustrated	W	Watts
C'case	Crankcase	Accl.	Accelerator
Cyl	Cylinder	Comp.	Complete
O/s	Over size	Fr.	Front
Rr.	Rear	Std.	Standard
L	Length	A/t.	Alternate
R.H.	Right hand	L.H.	Left hand
Hex.	Hexagonal	AR	As required

Index

BAJAJ Pulsar DTS-i 150 BS IV

Plate No.	Description	Page No.
1	Cover Cylinder Head	2
2	Sai Unit	4
3	Cylinder Head	6
4	Valve	8
5	Camshaft / Tensioner	10
6	Cylinder and Piston	12
7	Crank shaft	14
8	Balancer & Balancer Idler Gear	16
9	Transmission	18
10	Change Drum / Shaft Fork	20
11	Gear Change Mechanism	22
12	Engine Assly. & Crankcase RH	24
13	Crankcase LH	26
14	Cover RH	28
15	Cover Magneto	30
16	Clutch Assembly	32
17	Oil Pump	34
18	Kick Starter Mechanism	36
19	Carburettor	38
20	Air Filter	40
21	Silencer Assembly	42
22	Magneto, CDI & H.T. Coil	44
23	Starter Assembly	46
24	EVAP System	48
25	Engine Mountings	50
26	Frame and Frame Fittings	52
27	Swing Arm / Rear Shock Absorber	54
28	Rider Foot Rest	56
29	Pillion Setp Holder & Foot Rest	58
30	Mudguard - Front & Rear	60
31	Stand Assembly	62

Index

BAJAJ Pulsar DTS-i 150 BS IV

Plate No.	Description	Page No.
32	Tube / Tyre / Rim	64
33	Front Hub	66
34	FR. Master Cylinder	68
35	Front Disc Brake	70
36	Rear Hub	72
37	Rear Brake Padal	74
38	Handle Bar	76
39	Front Fork	78
40	Cap Tank & Gauge Fuel	80
41	Fittings P. Tank, Side Cover & Cover Seat	82
42	Seat Assembly / Seat Lock	84
43	Meter Assembly	86
44	Control Cables	88
45	Chain Case	90
46	Head Lamp & Fairing	92
47	Indicator Light Assembly	94
48	Tail Lamp Assly / FR & RR No. Plate	96
49	Tool Kit	98
50	Electrical Equipments	100
51	Accessories / Grab Handle	102
52	Painted Parts & Decals	104
53	Painted Parts & Decals	106
	Kits List	
	SPC Updation Details	
	Parts Index	

Pictorial Index

PLATE NO. : 1 COVER CYLINDER HEAD	PAGE NO. 1 & 2

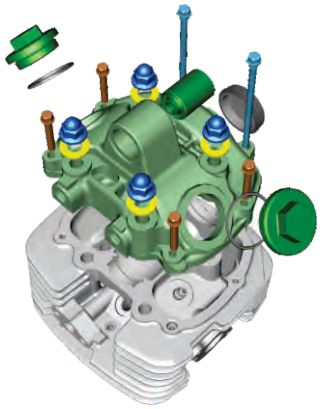

PLATE NO. : 2 SAI UNIT	PAGE NO. 3 & 4



PLATE NO. : 3 CYLINDER HEAD	PAGE NO. 5 & 6

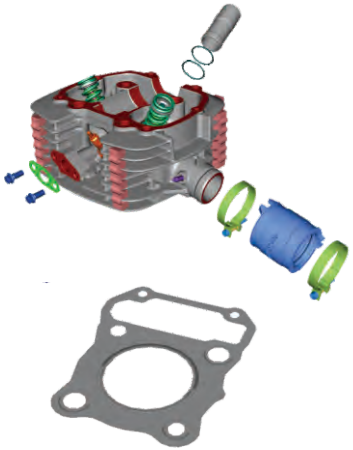

PLATE NO. : 4 VALVE	PAGE NO. 7 & 8



BAJAJ Pulsar DTS-i 150 BS IV

Pictorial Index

PLATE NO. : 5 CAMSHAFT / TENSIONER	PAGE NO. 9 & 10

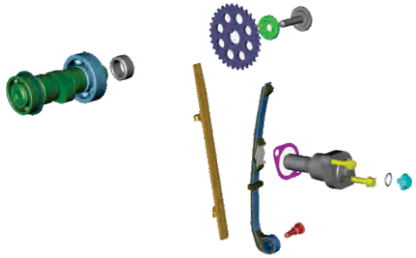

PLATE NO. : 6 CYLINDER & PISTON	PAGE NO. 11 & 12

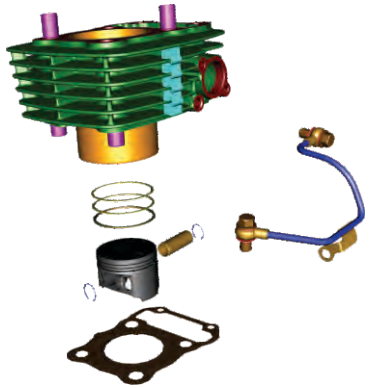

PLATE NO. : 7 CRANKSHAFT	PAGE NO. 13 & 14

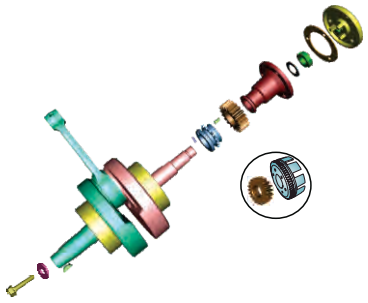

PLATE NO. : 8 Balancer & Balancer Idler Gear	PAGE NO. 15 & 16

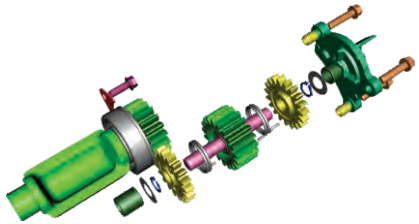

PLATE NO. : 9
Transmission
PAGE NO. 17 & 18

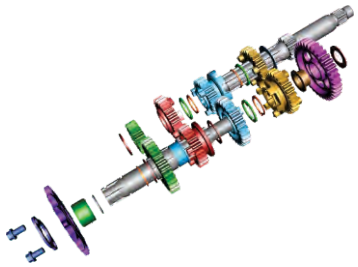

PLATE NO. : 10
Change Drum / Shaft Fork
PAGE NO. 19 & 20

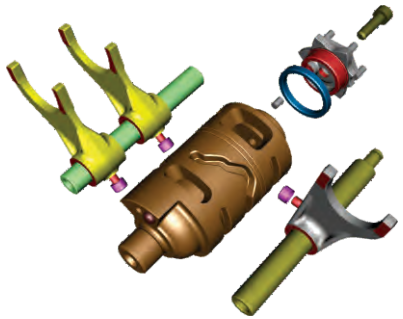

PLATE NO. : 11
Gear Change Mechanism
PAGE NO. 21 & 22

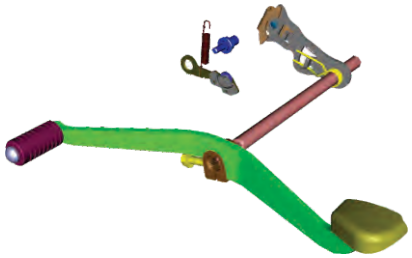

PLATE NO. : 12
Engine Assly. & Crankcase RH
PAGE NO. 23 & 24

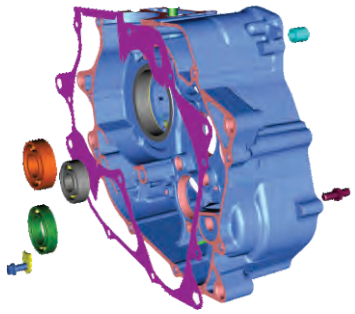

Pictorial Index

BAJAJ Pulsar DTS-i 150 BS IV

PLATE NO. : 13
Crankcase LH
PAGE NO. 25 & 26

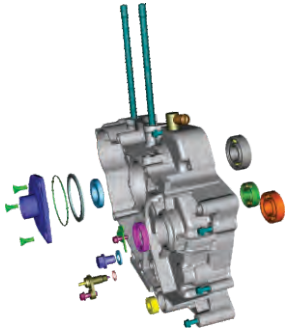

PLATE NO. : 14
Cover RH
PAGE NO. 27 & 28



PLATE NO. : 15
Cover Magneto
PAGE NO. 29 & 30



PLATE NO. : 16
Clutch Assly
PAGE NO. 31 & 32

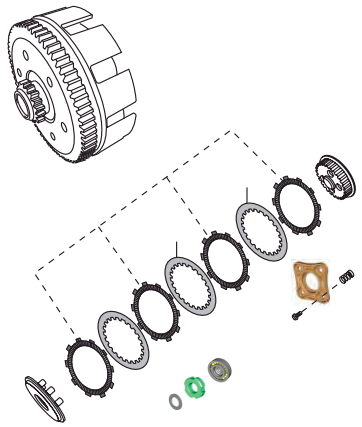

PLATE NO. : 17
Oil Pump
PAGE NO. 33 & 34

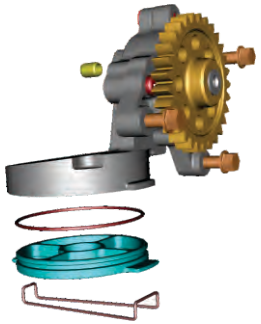

PLATE NO. : 18
Kick Starter Mechanism
PAGE NO. 35 & 36

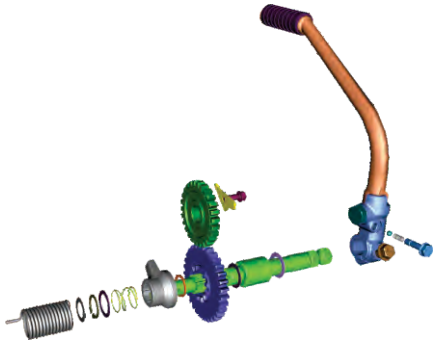

PLATE NO. : 19
Carburettor
PAGE NO. 37 & 38

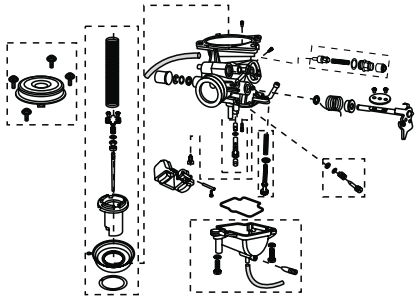

PLATE NO. : 20
Air Filter
PAGE NO. 39 & 40



Pictorial Index

BAJAJ Pulsar DTS-i 150 BS IV

PLATE NO. : 21
Silencer Assembly
PAGE NO. 41 & 42

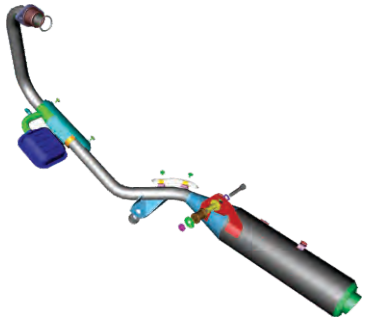

PLATE NO. : 22
Magneto, CDI & H.T. Coil
PAGE NO. 43 & 44

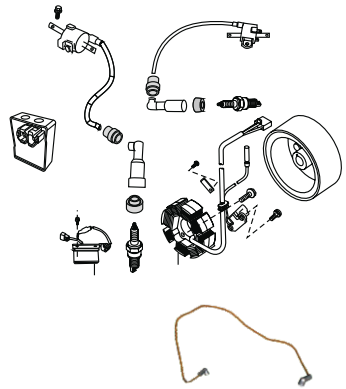

PLATE NO. : 23
Starter Assembly (For Self Start)
PAGE NO. 45 & 46

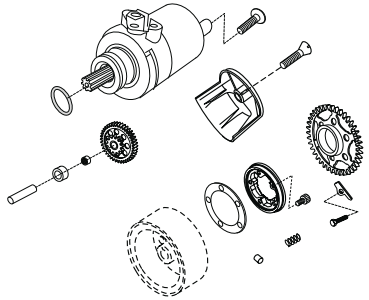

PLATE NO. : 24
EVAP System
PAGE NO. 47 & 48

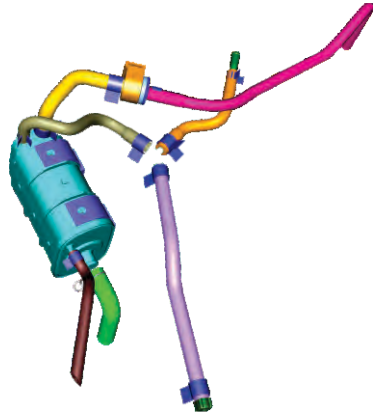

PLATE NO. : 25
Engine Mountings
PAGE NO. 49 & 50

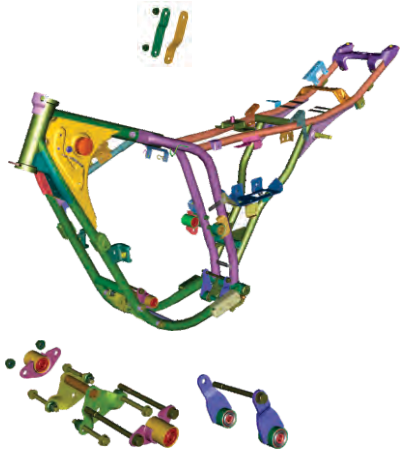

PLATE NO. : 26
Frame and Frame Fittings
PAGE NO. 51 & 52

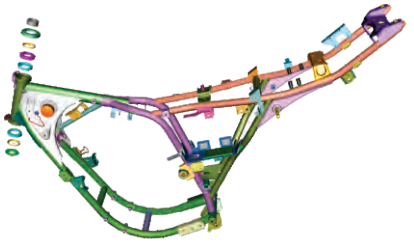

PLATE NO. : 27
Swing Arm / Rear Shock Absorber
PAGE NO. 53 & 54

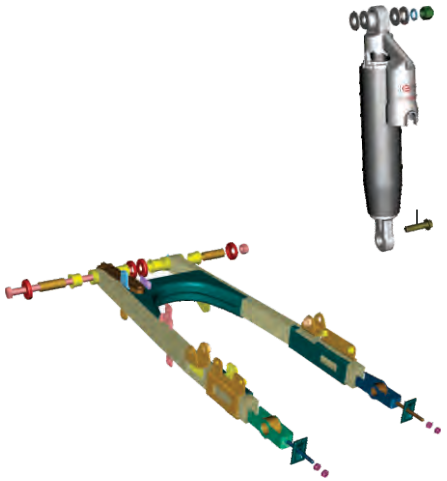

PLATE NO. : 28
Rider Foot Rest
PAGE NO. 55 & 56

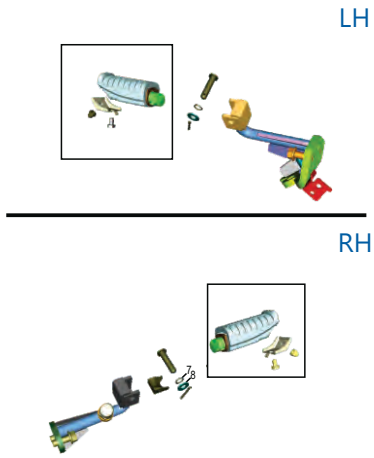

Pictorial Index

BAJAJ Pulsar DTS-i 150 BS IV

PLATE NO. : 29
Pillion Setp Holder & Foot Rest
PAGE NO. 57 & 58



PLATE NO. : 30
Mudguard - Front & Rear
PAGE NO. 59 & 60

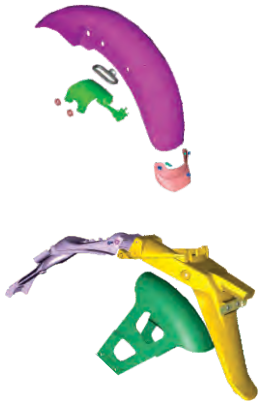

PLATE NO. : 31
Stand Assembly
PAGE NO. 61 & 62



PLATE NO. : 32
Tube / Tyre / Rim
PAGE NO. 63 & 64



PLATE NO. : 33 FRONT HUB	PAGE NO. 65 & 66

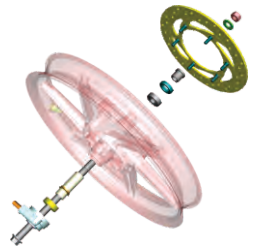

PLATE NO. : 34 FR. Master Cylinder	PAGE NO. 67 & 68

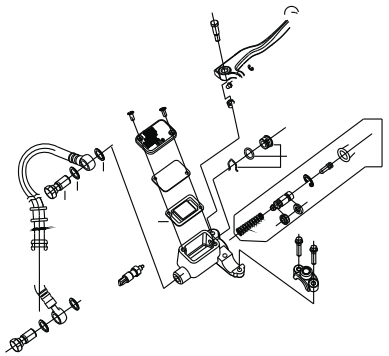

PLATE NO. : 35 Front Disc Brake Rear Hub	PAGE NO. 69 & 70

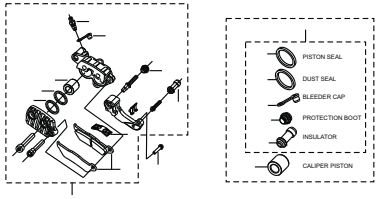

PLATE NO. : 36 REAR HUB	PAGE NO. 71 & 72



Pictorial Index

BAJAJ Pulsar DTS-i 150 BS IV

PLATE NO. : 37 Rear Brake Padal	PAGE NO. 73 & 74

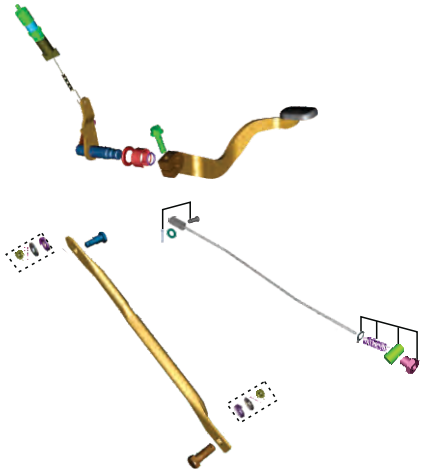

PLATE NO. : 38 HANDLE BAR	PAGE NO. 75 to 76

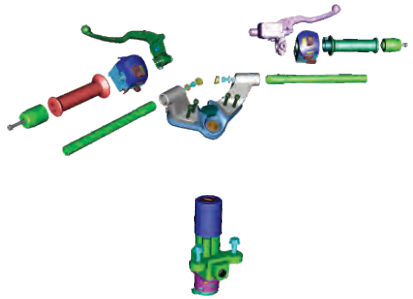

PLATE NO. : 39 Front Fork	PAGE NO. 77 & 78

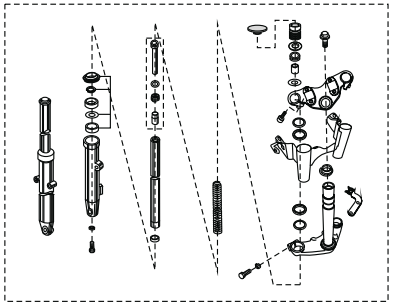

PLATE NO. : 40 Cap Tank & Gauge Fuel	PAGE NO. 79 & 80

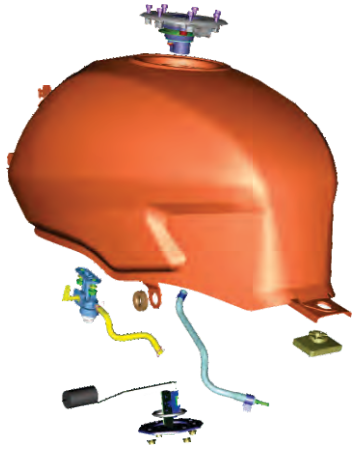

PLATE NO. : 41
Fittings P. Tank, Side Cover & Cover Seat
PAGE NO. 81 & 82



PLATE NO. : 42
Seat Assembly / Seat Lock
PAGE NO. 83 & 84

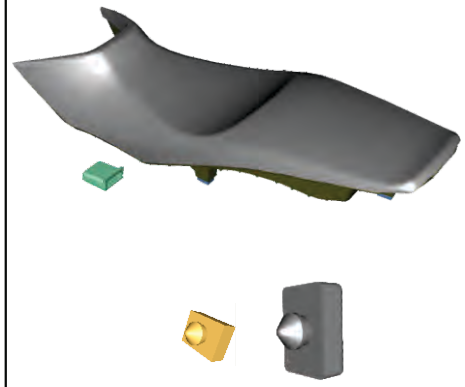

PLATE NO. : 43
Meter Assembly
PAGE NO. 85 & 86



PLATE NO. : 44
Control Cables
PAGE NO. 87 & 88



Pictorial Index

BAJAJ Pulsar DTS-i 150 BS IV

PLATE NO. : 45
Chain Case
PAGE NO. 89 & 90

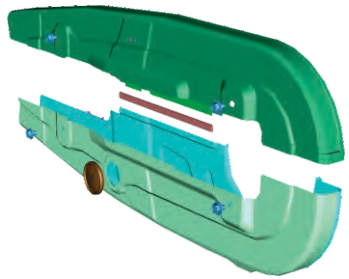

PLATE NO. : 46
Head Lamp & Fairing
PAGE NO. 91 & 92

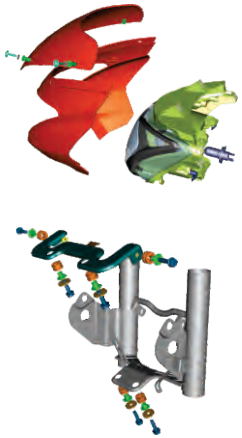

PLATE NO. : 47
Indicator Light Assembly
PAGE NO. 93 & 94

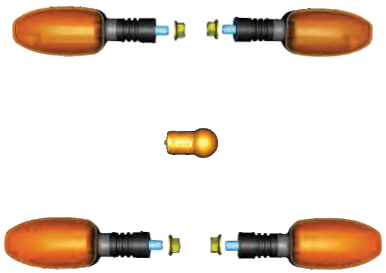

PLATE NO. : 48
Tail Lamp Assly / FR & RR No. Plate
PAGE NO. 95 & 96



PLATE NO. : 49 Tool Kit	PAGE NO. 97 & 98



PLATE NO. : 50 Electrical Equipment	PAGE NO. 99 & 100

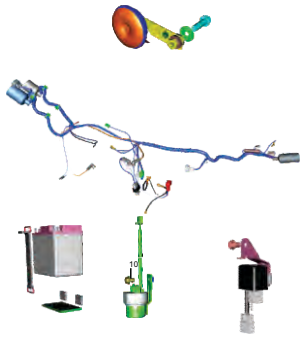

PLATE NO. : 51 Accessories / Grab Handle	PAGE NO. 101 & 102

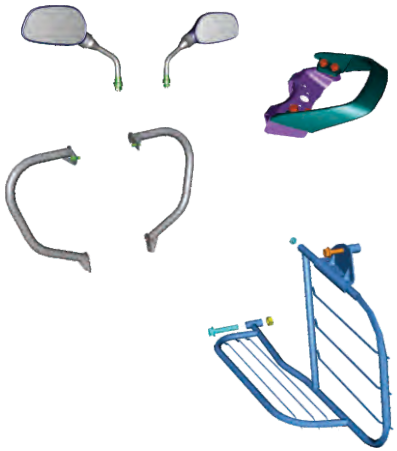

PLATE NO. : 52 Painted Parts	PAGE NO. 103 & 104

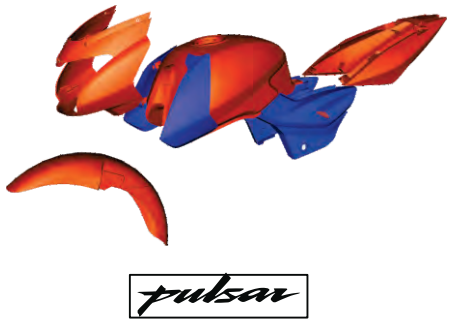

Pictorial Index

BAJAJ pulsar DTS-i 150 BS IV

PLATE NO. : 53 Decals Sets	PAGE NO. 105 & 106

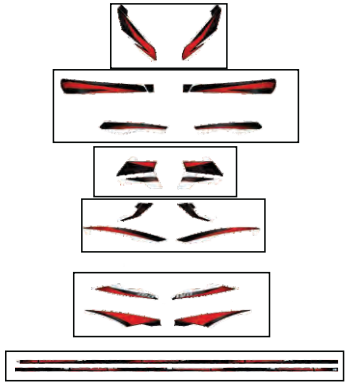

Plate No.: 1

Cover Cylinder Head

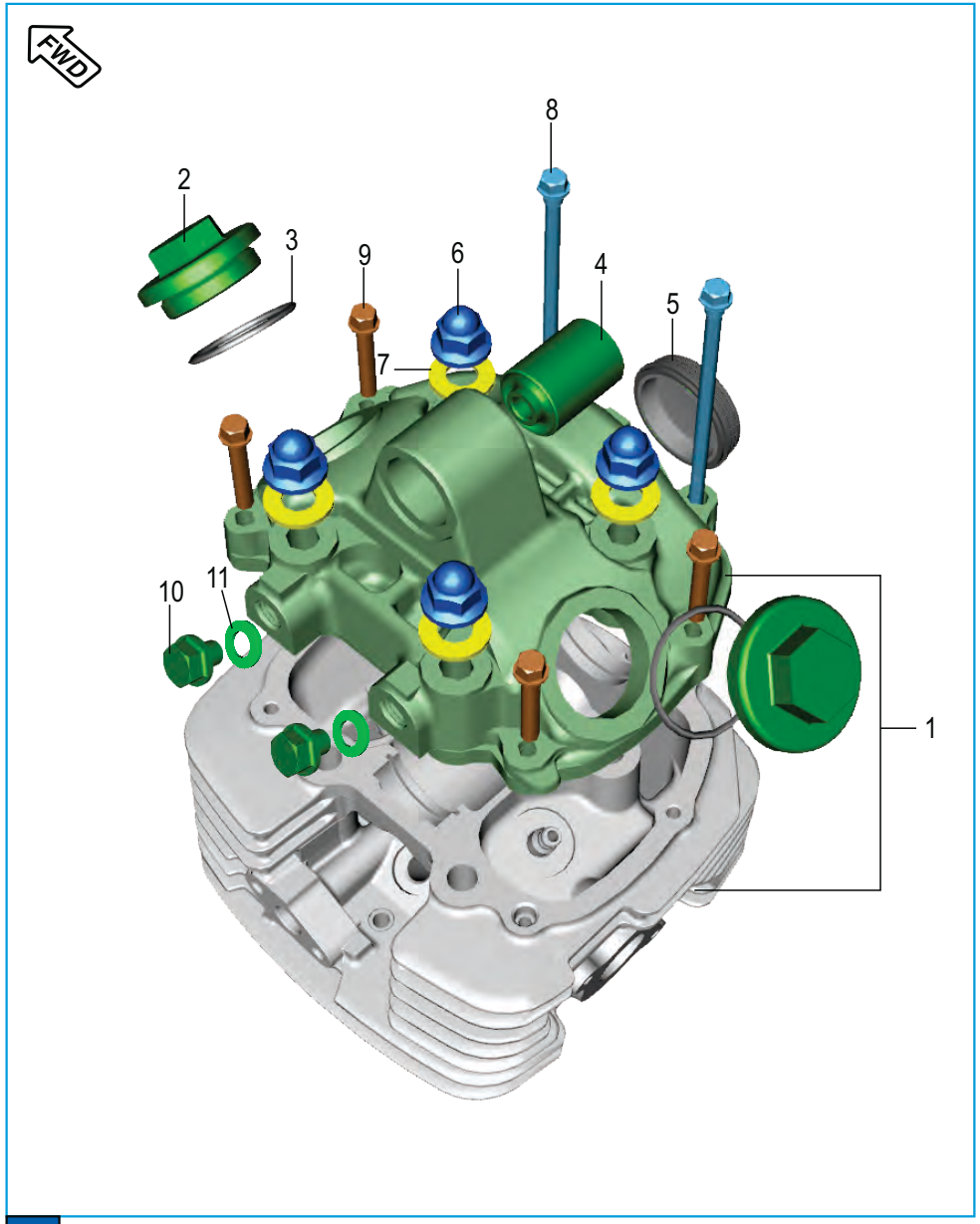

No.	Part No.	Description	Qty/Veh.	Remarks
1	DH 1021 03	Head Cylinder Mach. With Cover	1	
2	52 JN01 36	Cover Tappet with O Ring	2	
3	36 DS10 01	'O' Ring Kit For Cover Cyl. Head	1	
4	DS 1011 66	Silent Bush (V)	1	
5	DH 1022 01	Camshaft Cap	1	
6	39 2647 15	Domed Cap Nut	4	
7	DS 1010 84	Copper Gasket	4	
8	39 2532 04	Hex. Bolt With Flange	2	
9	39 1075 04	Hex. Bolt / Flange	4	
10	DH 1012 72	Plug	2	
11	DG 1014 98	Gasket	2	

FWD Front Wheel Direction

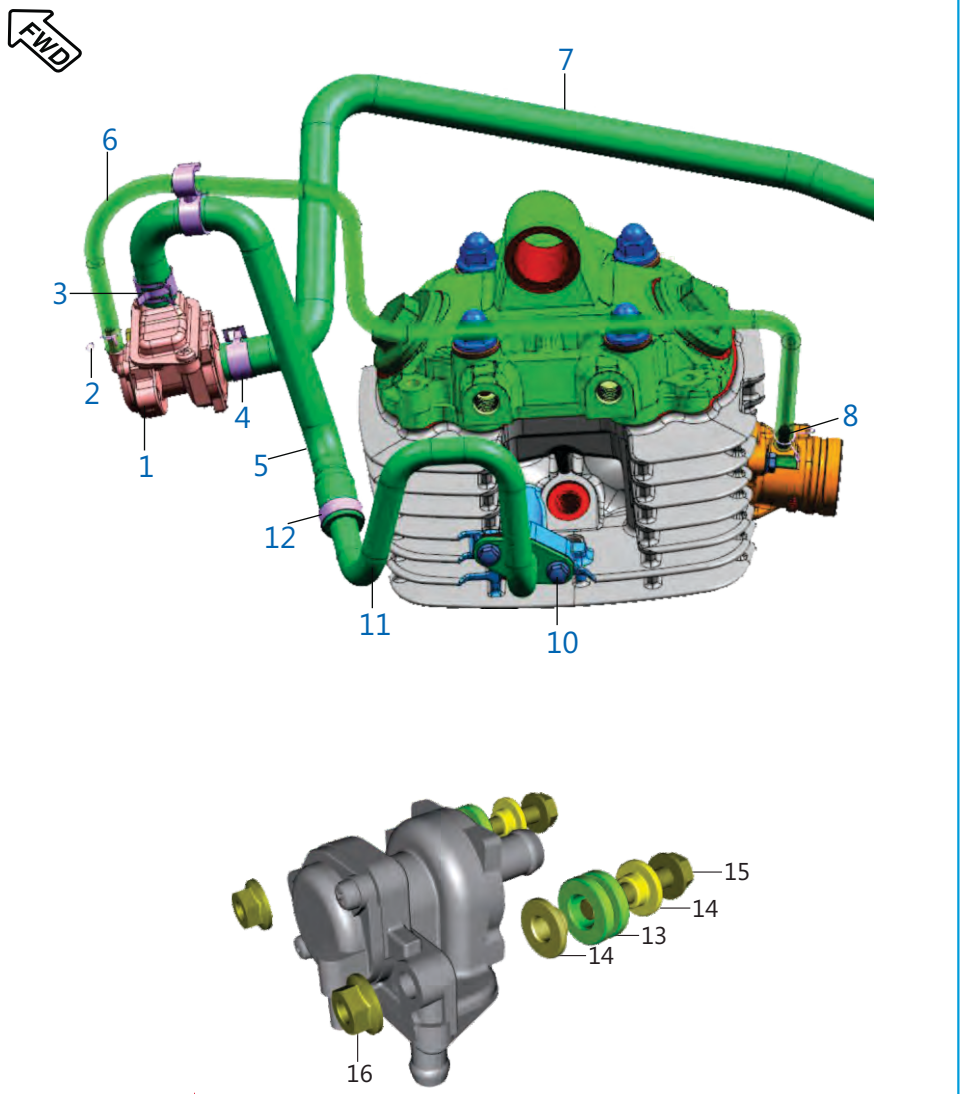

FWD Front Wheel Direction

Plate No.: 2

SAI Unit

No.	Part No.	Description	Qty/Veh.	Remarks
1	PD 5822 00	Unit SAI	1	
2	33 1410 08	Clamp	2	
3	JL 5810 66	Band Clip	1	
4	JE 5810 39	Band Clip SAI Hose Outlet Tube	1	
5	DH 1021 75	Hose SAI Unit To SAI Pipe	1	
6	DH 1212 08	Hose SAI Unit To Intake Manifold	1	
7	DJ 1210 89	Hose SAI Unit To Air Filter	1	
8	JE 5814 16	Nipple Connector Manifold SAI	1	
9	DH 1021 80	Gasket Metal Pipe With Flange SAI	1	
10	KA EG06 14	Bolt Flanged Small	2	
11	DH 1021 74	Metal Pipe With Flange SAI	1	
12	JL 5810 65	Clamp Hose SAI	1	
13	JD 1138 14	Grommet SAI Unit	2	
14	JD 1138 15	Sleeve SAI Unit	4	
15	KA DF06 30	Bolt Flanged	2	
16	KC GF06 06	Nut Hex Flanged	2	

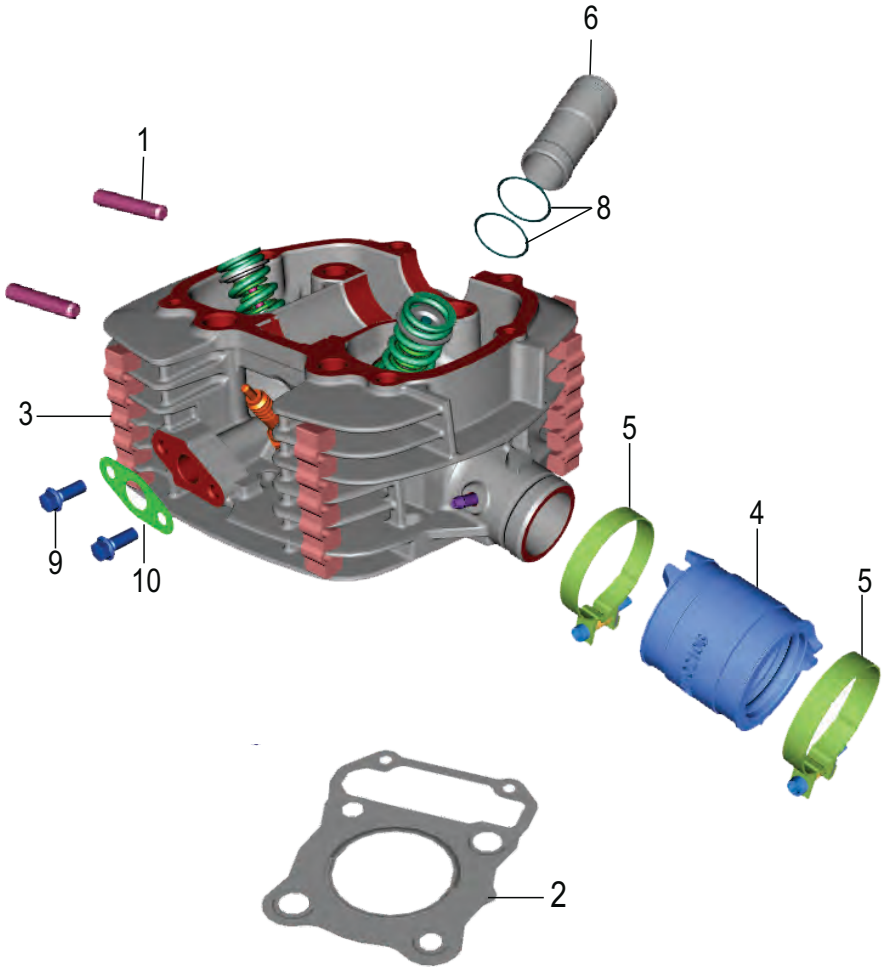

FWD Front Wheel Direction

Plate No.: 3

Cylinder Head

No.	Part No.	Description	Qty/Veh.	Remarks
1	39 1660 05	Stud (exhaust)	2	
2	DH 1022 30	Gasket Cylinder Head	1	
3	DH 1015 08	Damper Cylinder Head	5	
4	DH 1021 07	Carburetor Insulator	1	
5	DH 1021 18	Clamp For Insulator	2	
6	DH 1110 12	Sleeve - Spark Plug	1	
7	39 2608 01	Grub Screw	1	N.I
8	36 DS10 01	'O' Ring Kit For Cover Cyl. Head	1	
9	KA EG06 14	Bolt Flange	2	
10	DH 1021 80	Gasket	1	

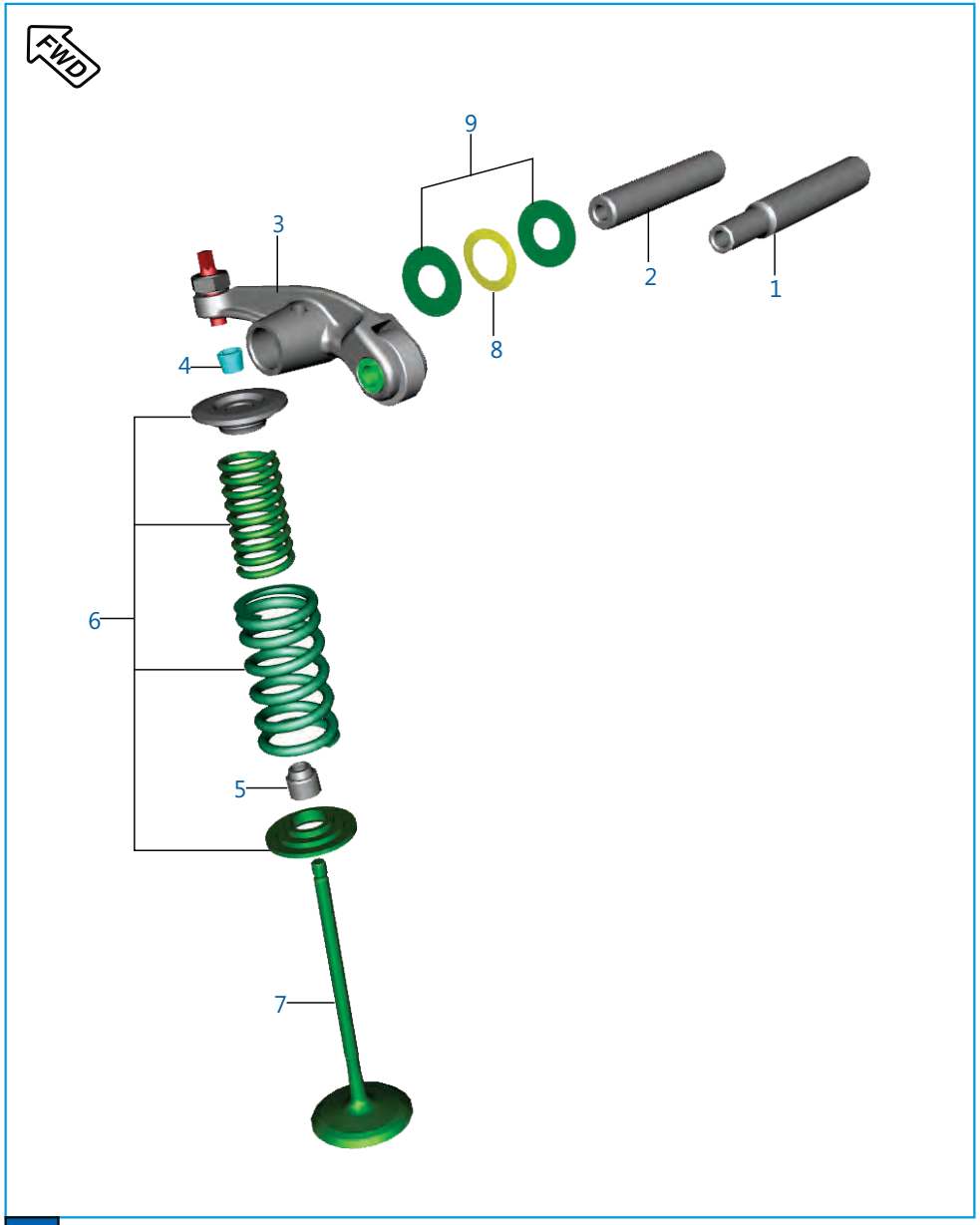

Plate No.: 4

Valve

No.	Part No.	Description	Qty/Veh.	Remarks
1	DK 1017 48	Rocker Arm Shaft - Intake	1	
2	DK 1017 51	Rocker Arm Shaft - Exhaust	1	
3	DK 1017 55	Rocker Arm Assembly	2	
4	DG 1010 29	Cotter valve	4	
5	39 2017 19	Seal valve stem	2	
6	36 DK00 05	Kit Seat Valve Spring	1	
7	36 DS10 02	Valve Kit	1	
8	DH 1012 95	Wave washer	2	
9	39 2440 11	Plain washer	4	

FWD Front Wheel Direction

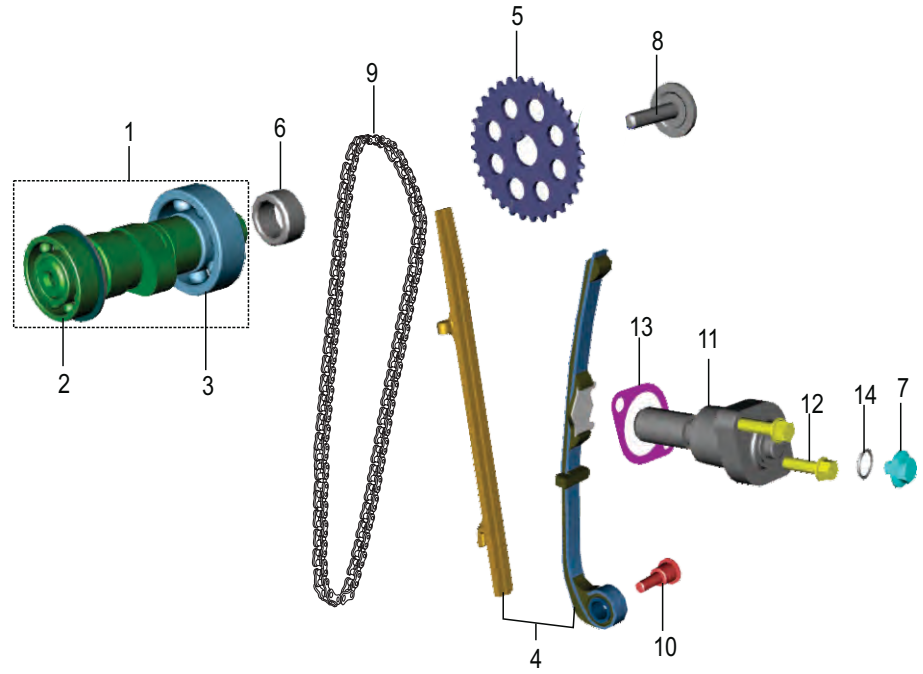

FWD Front Wheel Direction

Plate No.: 5

Camshaft / Tensioner

No.	Part No.	Description	Qty/Veh.	Remarks
1	PD 5112 24	Camshaft Assembly	1	
2	JC 1010 85	Bearing Camp	1	
3	JC 1010 86	Bearing Camp	1	
4	36 DH40 30	Guide chain Kit	1	
5	PD 5112 29	Sprocket cam Driven	1	
6	DH 1014 12	Collar cam Sprocket	1	
7	DD 1010 62	Bolt	1	
8	DH 1021 25	Hex. Soc. Head cap Bolt	1	
9	JC 1010 35	Cam Chain	1	
10	DH 1013 92	Cam chain Tensioner pivot Bolt	1	
11	JC 1010 34	Tensioner Assly	1	
12	39 1673 04	Hex Bolt / Flange	2	
13	CS 1011 28	Tensioner assly. gasket	1	
14	39 2669 21	Ring 'O' Tension assly	1	

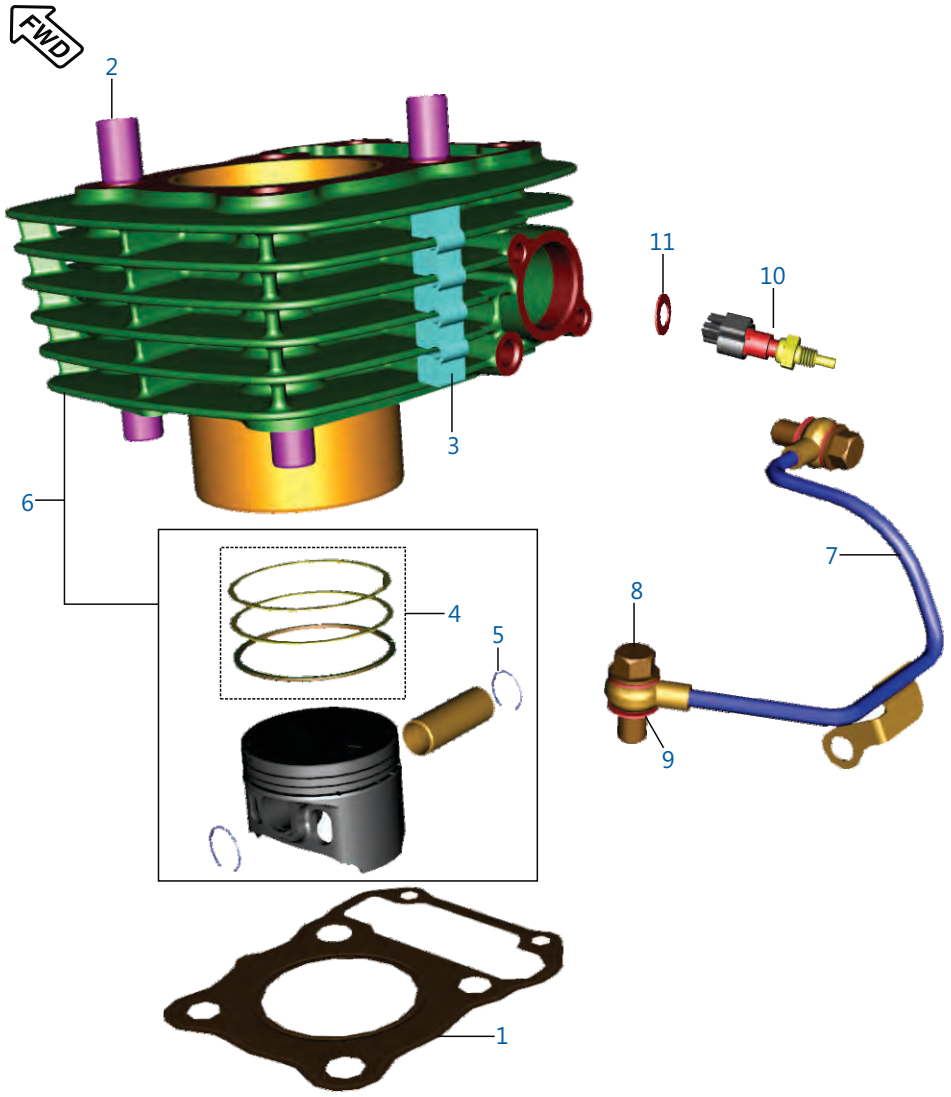

FWD Front Wheel Direction

Plate No.: 6

Cylinder and Piston

No.	Part No.	Description	Qty/Veh.	Remarks
1	DK 1010 63	Gasket Cylinder	1	
2	39 2181 06	Pin Dowel	4	
3	DH 1014 14	Damper - Rubber	5	
4	36 DH41 02	Ring Set Piston	1	
5	DH 1016 71	Ring Snap	2	
6	36 DH41 03	Cylinder Block / Piston Assly	1	
7	DK 1015 92	Assembly Oil Pipe	1	
8	DD 1210 07	Bolt	2	
9	31 1210 06	Gasket	4	
10	Dk101503	Engine Temperature sensor	1	Ref. Cir. IB: 293
11	Dk101237	Washer for Engine Tem. Sensor	1	Ref. Cir. IB: 293

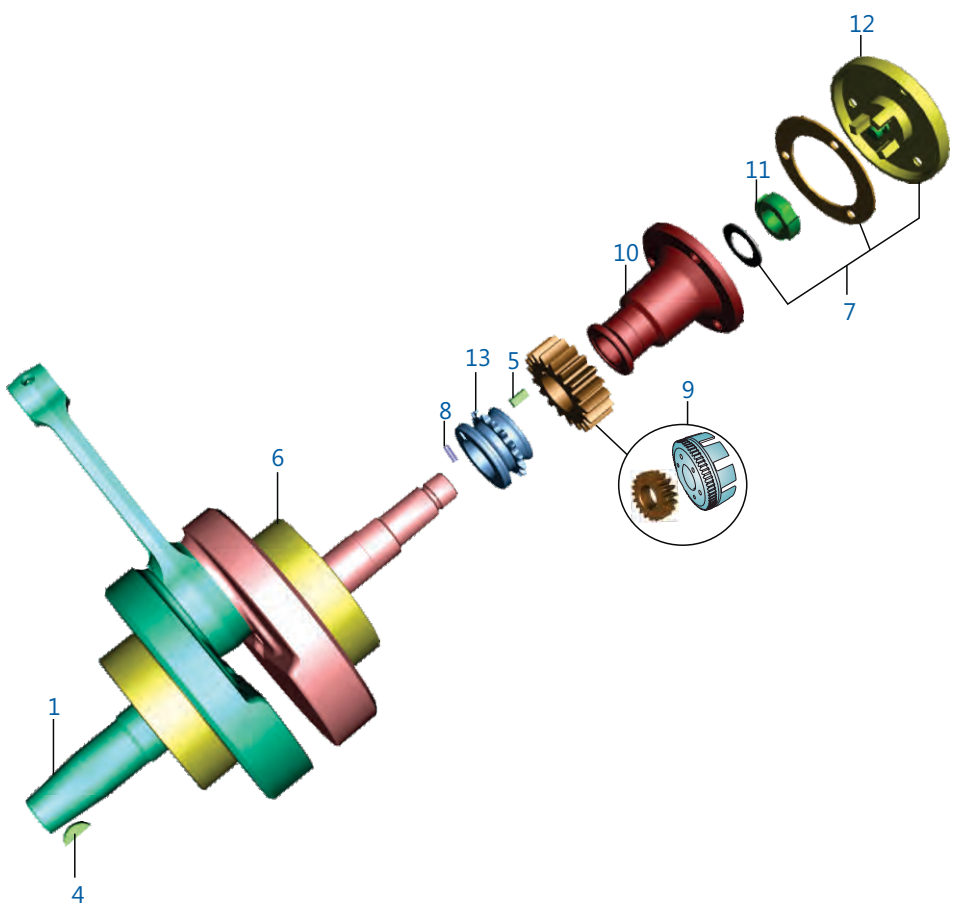

FWD Front Wheel Direction

Plate No.: 7

Crank shaft

No.	Part No.	Description	Qty/Veh.	Remarks
1	DH 1022 20	Crankshaft assly. comp.	1	
2	DH 1013 96	Bolt Head Flanged	1	N.I
3	39 2165 11	Plain washer	1	N.I
4	31 1011 73	Key woodruff	1	
5	DS 1011 54	Key	1	
6	39 1931 20	Bearing Ball	2	
7	36 DH40 19	Kit centrifugal over screw oil filter	1	
8	39 2203 07	Parallel pin	1	
9	DH 1016 28	Gear Primary	1	
10	DH 1013 55	Body centrifugal oil filter	1	
11	DH 1011 95	Nut primary drive	1	
12	DH 1013 55	Cover centrifugal oil filter	1	
13	PD 5310 29	Sprocket Crankshaft	1	

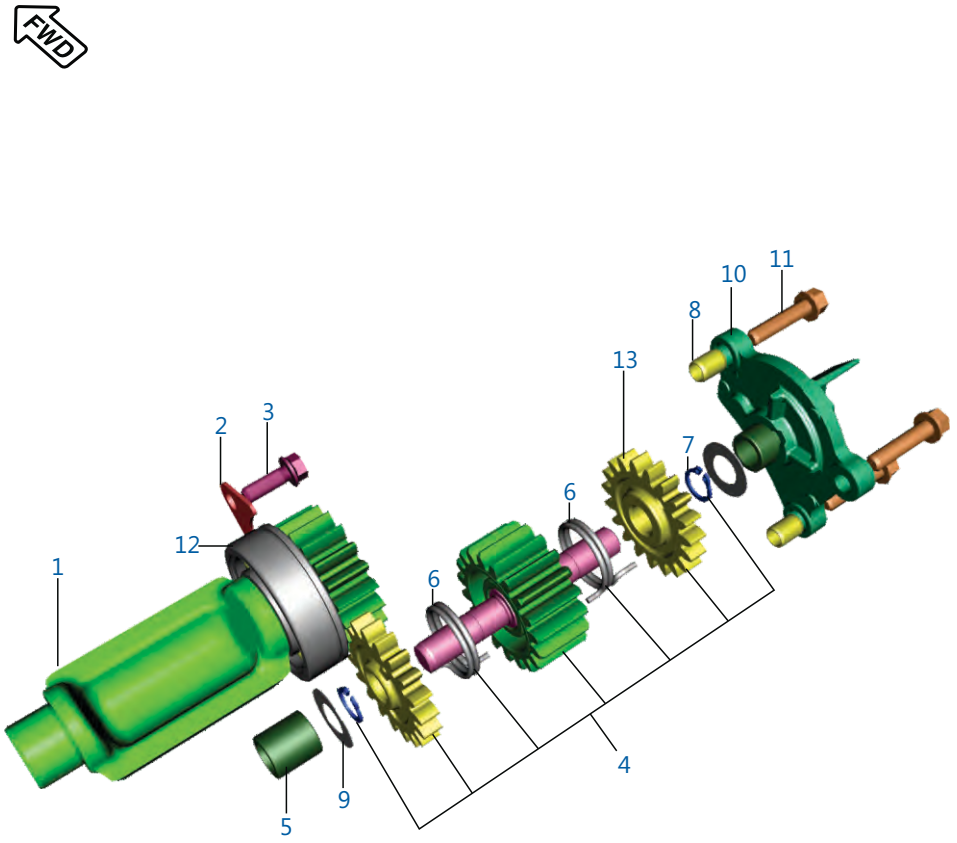

FWD Front Wheel Direction

Plate No.: 8

Balancer & Balancer Idler Gear

No.	Part No.	Description	Qty/Veh.	Remarks
1	DH 1021 04	Body Balancer Assly.	1	
2	DH 1010 72	Bearing stopper	1	
3	39 1672 04	Bolt stopper	1	
4	DH 1020 53	Gear Complete Balancer Idler	1	
5	39 2152 20	Needle roller bearing	2	
6	DH 1014 24	Spring torsion Balancer Idler	2	
7	39 2557 17	Circlip ext.	2	
8	39 1686 06	Dowel Pin	2	
9	39 1620 11	Spring steel washer	2	
10	52 DH01 77	Balancer Idler Holder	1	
11	39 1674 04	Hex bolt with flange	3	
12	59 2000 28	Bearing Balancer	1	
13	DH 1013 73	Scissor Balancer Idler - Nylon	2	

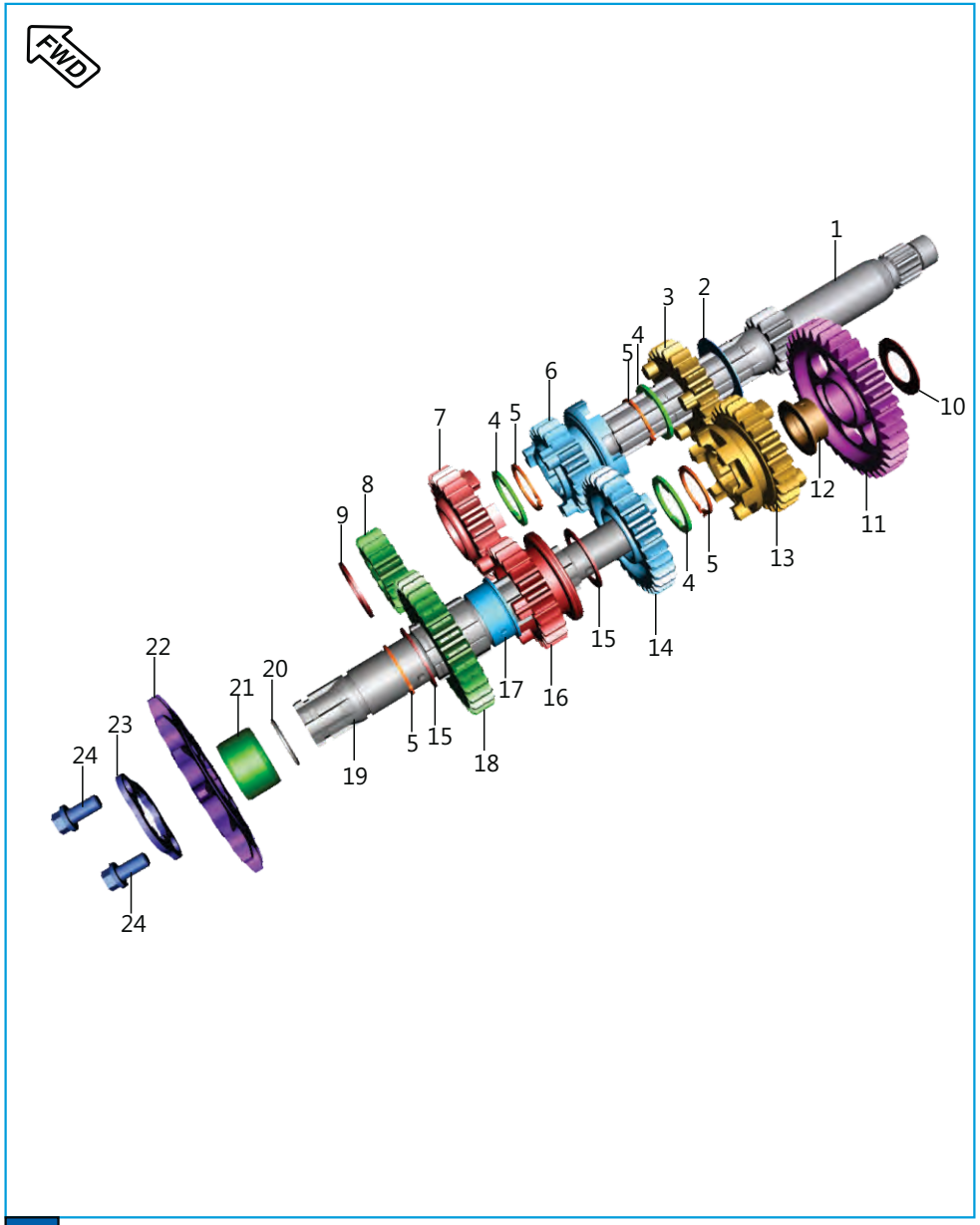

FWD Front Wheel Direction

Plate No.: 9

Transmission

No.	Part No.	Description	Qty/Veh.	Remarks
1	DH 1022 85	Shaft Input Transmission	1	
2	39 2158 11	Plain Washer	1	
3	DH 1010 78	Gear 4th Drive	1	
4	DH 1010 79	Washer Spline	3	
5	DH 1012 35	Circlip Ext	4	
6	DH 1010 80	Gear 3rd Drive	1	
7	DH 1010 82	Gear 5th Drive	1	
8	DH 1020 13	Gear 2nd Drive	1	
9	39 2160 11	Plain Washer	1	
10	39 2159 11	Plain Washer	1	
11	DH 1022 92	Gera 1st Driven	1	
12	DH 1011 11	Bush 1st Driven	1	
13	DH 1011 10	Gear 4th Driven	1	
14	DH 1011 08	Gear 3rd Driven	1	
15	39 2159 11	Washer Special	2	
16	DH 1019 20	Gear 5ht Driven	1	
17	DH 1013 19	Bush 2nd Driven	1	
18	DH 1020 22	Gear 2nd Driven	1	
19	DH 1014 16	Shaft Output Transmission	1	
20	30 1010 61	O Ring sprocket Collar	1	
21	DH 1011 16	Collar sprocket	1	
22	DH 1011 17	Sprocket Drive	1	
23	DJ 1010 63	Plate Drive Sprocket	1	
24	39 1062 04	Bolt Flanged Small	2	

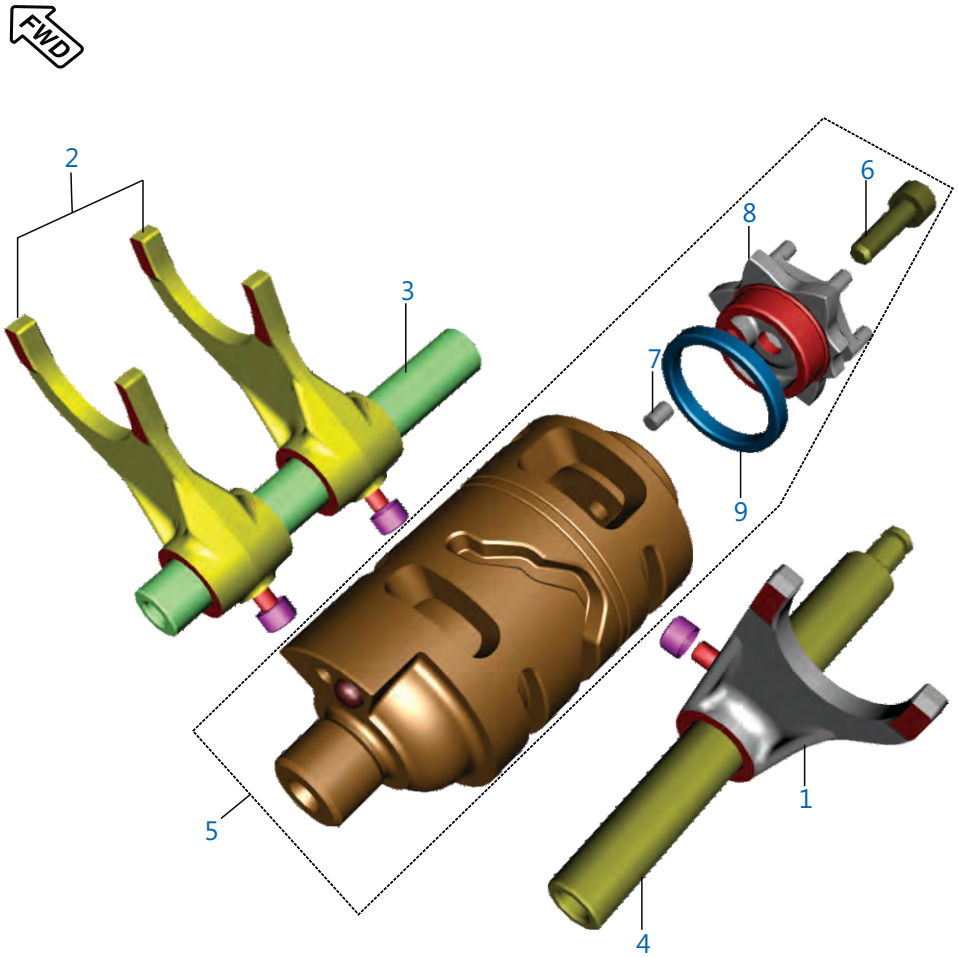

FWD Front Wheel Direction

Plate No.: 10

Change Drum / Shaft Fork

No.	Part No.	Description	Qty/Veh.	Remarks
1	DK 1011 59	Fork Gear Shift Input	1	
2	DK 1011 60	Fork Gear Shift Output	2	
3	DH 1011 46	Shift Gear Shift Fork	1	
4	DH 1014 93	Shaft Gear Fork Shift	1	
5	DK 1017 32	Drum Comp. Gear Shift	1	
6	39 1197 04	Bolt Socket	1	
7	39 2606 07	Parallel Pin	1	
8	DH 1021 89	Guide Gear Shift	1	
9	DH 1014 96	Spacer	1	
10	DK 1011 35	Bush Fork Gear Shift	3	

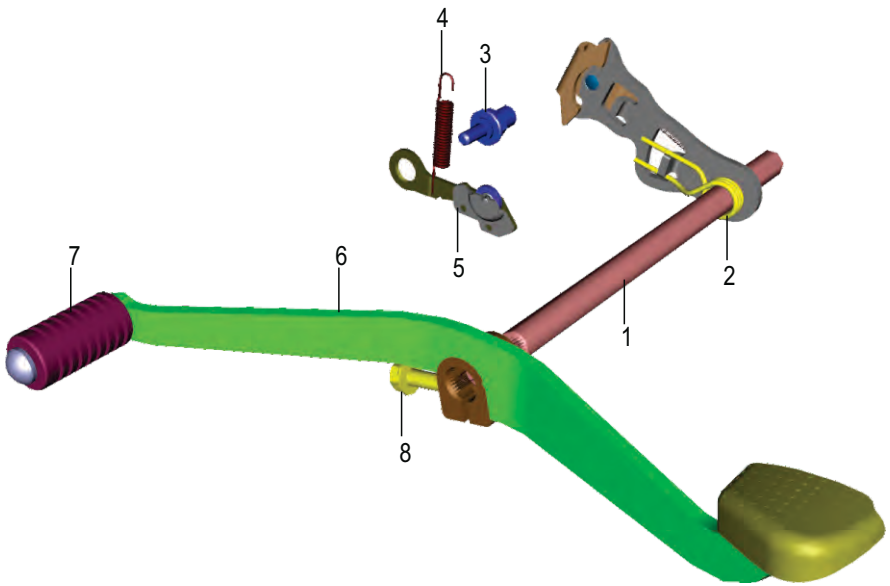

FWD Front Wheel Direction

Plate No.: 11

Gear Change Mechanism

No.	Part No.	Description	Qty/Veh.	Remarks
1	DK 1017 33	Assly Lever Shaft	1	
2	DK 1017 22	Spring Shift Return	1	
3	DH 1013 93	Bolt Gear shift Drum Stopper	1	
4	DH 1015 02	Spring Stopper Drum	1	
5	DK 1017 25	Stopper Drum	1	
6	DH 1013 97	Lever Complete Change	1	
7	DH 1015 09	Damper	1	
8	DH 1013 94	Bolt	1	

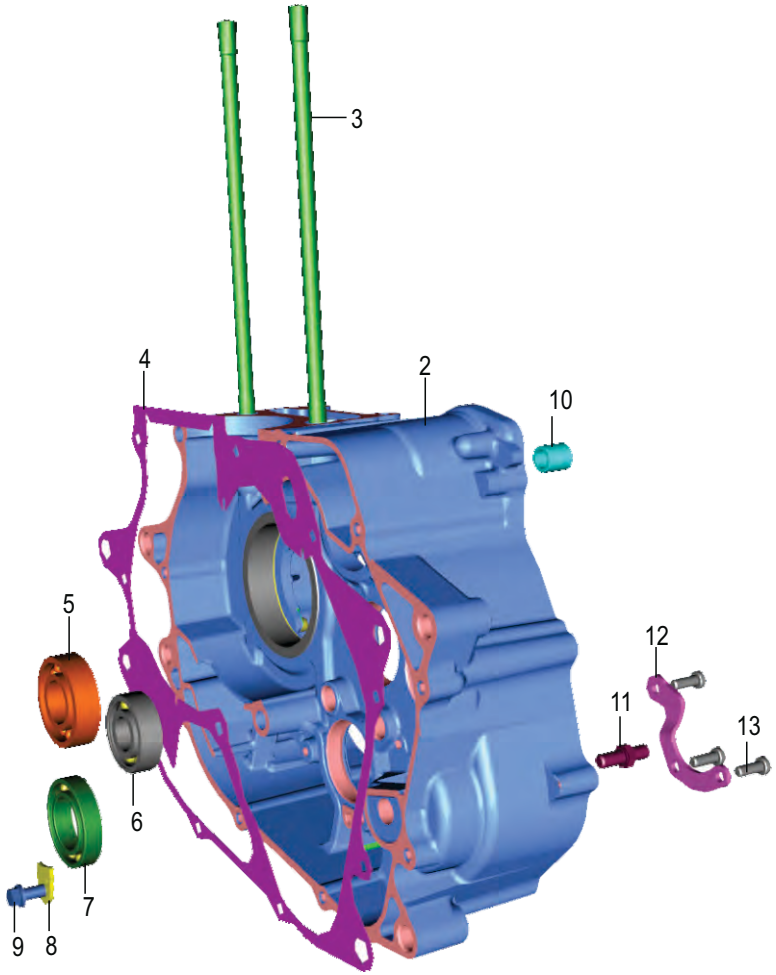

FWD Front Wheel Direction

Plate No.: 12

Engine Assly. & Crankcase RH

No.	Part No.	Description	Qty/Veh.	Remarks
1	DH 1021 77	Engine Assly. BS IV SAI	1	N.I
	DH 1023 43	Engine Assembly	1	Ref.Cir. IB 293
2	DH 1021 65	Crankcase RH	1	
3	59 0500 08	Stud	2	
4	DH 1010 06	Gasket Crankcase	1	
5	39 2583 20	Bearing Ball (For Input Shaft)	1	
6	39 2602 20	Bearing Ball (For Output Shaft)	1	
7	39 2601 20	Ball Bearing	1	
8	DH 1014 87	Plate Stopper	1	
9	AA 1014 37	Bolt Flanged Small	1	
10	39 2152 20	Needle Roller Bearing	1	
11	DH 1013 94	Bolt Shift Change	1	
12	DH 1015 36	Guide kick	1	
13	DH 1015 40	Bolt	3	

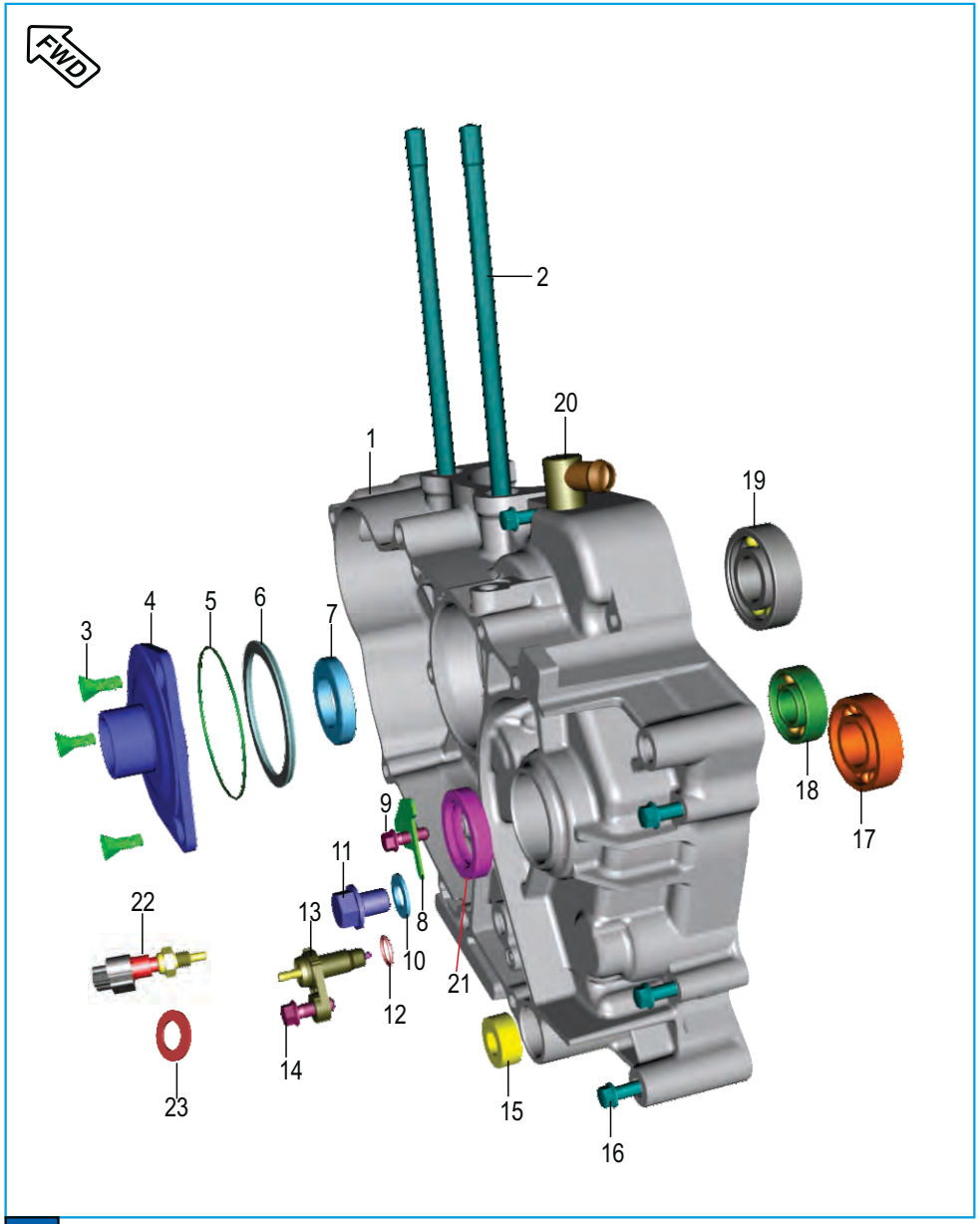

Front Wheel Direction

Plate No.: 13

Crankcase LH

No.	Part No.	Description	Qty/Veh.	Remarks
1	36 DH40 99	Kit Assly C'case LH	1	
	36 DH41 30	Kit Assly Crankcase LH	1	Ref. Cir. IB 293
2	59 0500 08	Stud M10	2	
3	DH 1013 79	Screw	3	
4	DH 1022 00	Guide Starter Gear	1	
5	59 2100 06	O Ring	1	
6	DJ 1017 05	Damper Crankshaft	1	
7	39 2188 19	Oil Seal	1	
8	DH 1015 81	Plate Starter Clutch Gear Return	1	
9	DH 1013 85	Bolt Flange	1	
10	DG 1014 98	Gasket	1	
11	DH 1016 61	Plug Drain Magnetic	1	
12	KJ AB10 19	O Ring	1	
13	DK 1013 80	Neutral Switch Complete	1	
14	DH 1013 85	Bolt Flange	1	
15	39 2190 19	Oil Seal	1	
16	39 1677 04	Flange Bolt	8	
17	39 2583 20	Bearing Ball	1	
18	39 2603 20	Bearing Ball	1	
19	59 2000 29	Bearing Ball Balancer	1	
20	DH 1012 03	Breather Pipe	1	
21	39 2189 19	Oil Seal	1	
22	DK 1015 03	Engine Temperature Sensor	1	Ref. Cir. IB 293
23	DK 1012 37	Washer Copper Oil Cooler	1	Ref. Cir. IB 293

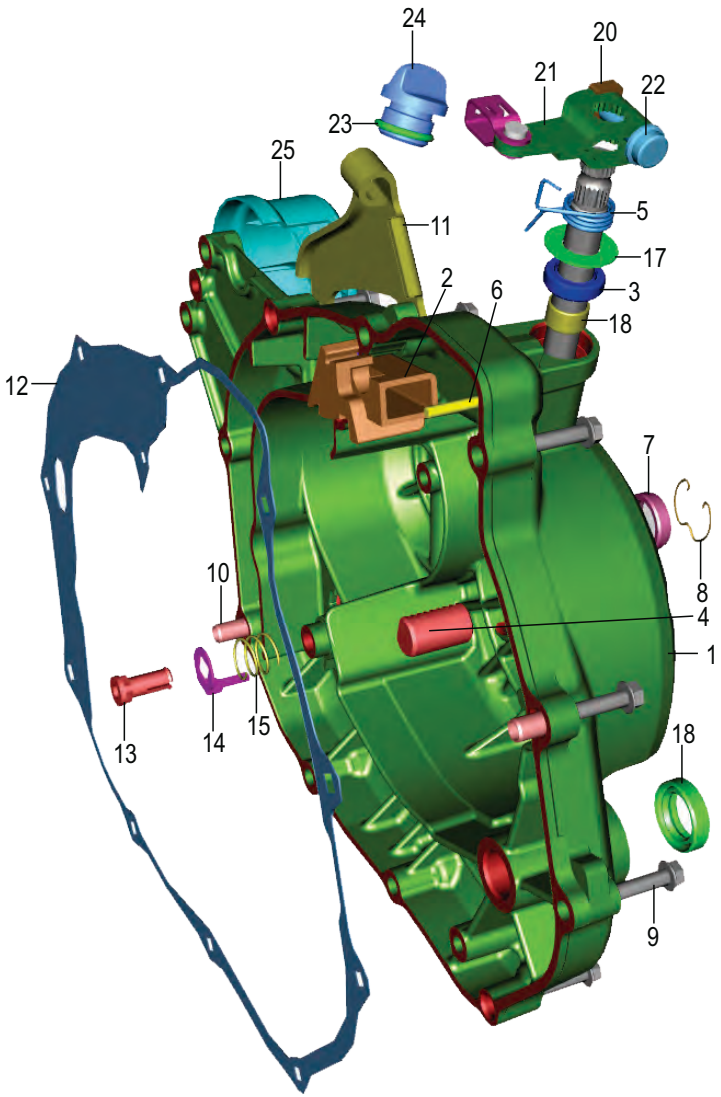

FWD Front Wheel Direction

Plate No.: 14

Cover RH

No.	Part No.	Description	Qty/Veh.	Remarks
1	52 DH13 18	Cover Clutch	1	
2	DH 1011 97	Grommet Breather	1	
3	39 1041 19	Oil Seal	1	
4	DH 1011 41	Rack	1	
5	DH 1011 42	Shaft clutch release	1	
6	39 2202 07	Parallel pin	1	
7	DG 1014 18	Gauge	1	
8	DS 1012 15	Wire circlip	1	
9	DS 1013 53	Bolt	10	
	39 1075 04	Bolt	10	Ref. Cir. IB 293
10	39 0999 06	Pin Dowel	2	
11	DH 1018 81	Bracket Clutch Cable	1	
12	DH 1011 54	Gasket cover RH	1	
13	DK 1014 80	Plunger Oil	1	
14	DH 1210 11	Plate Plunger Oil	1	
15	DH 1210 12	Spring Joint 'A'	1	
16	DH 1015 44	Spring torsion clutch lever	1	
17	39 2443 11	Washer	1	
18	30 1011 42	Seal Oil	4	
19	DK 1017 38	Decal Clutch Cover	1	
20	DH 1012 75	Nut Special	1	
21	DK 1016 36	Lever Assly	1	
22	39 1674 04	Flange Bolt	1	
23	DH 1011 52	O Ring	1	
24	DS 1010 71	Cap Oil Filter	1	
25	DK 1017 70	Cover Starter Motor	1	

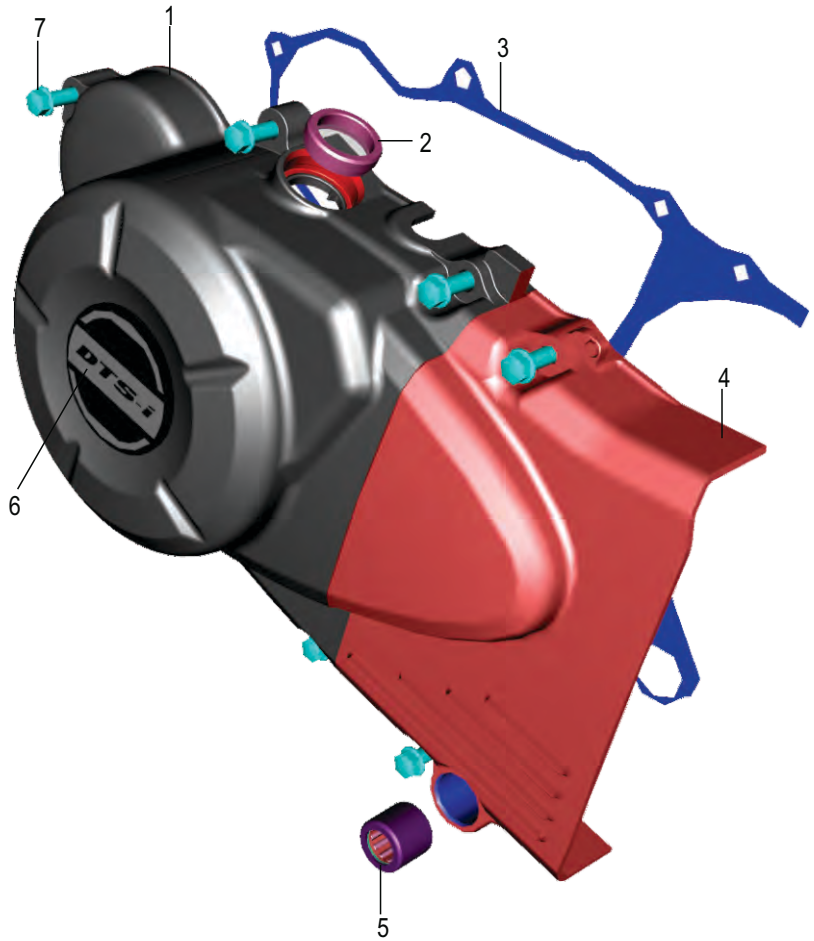

FWD Front Wheel Direction

Plate No.: 15

Cover Magneto

No.	Part No.	Description	Qty/Veh.	Remarks
1	52 DH13 17	Magneto Cover	1	
2	DG 1014 18	Gauge	1	
3	DV 1010 42	Gasket	1	
4	52 DH14 12	Assly Cvr LH RR Slate Grey	1	
5	AP 1010 43	Bearing Needle Bendix	1	
6	JE 5412 12	Decal Magneto Cover	1	
7	DS 1013 53	Bolt Flanged	7	
8	DJ 1610 12	Grear Shift Label	1	N.I.

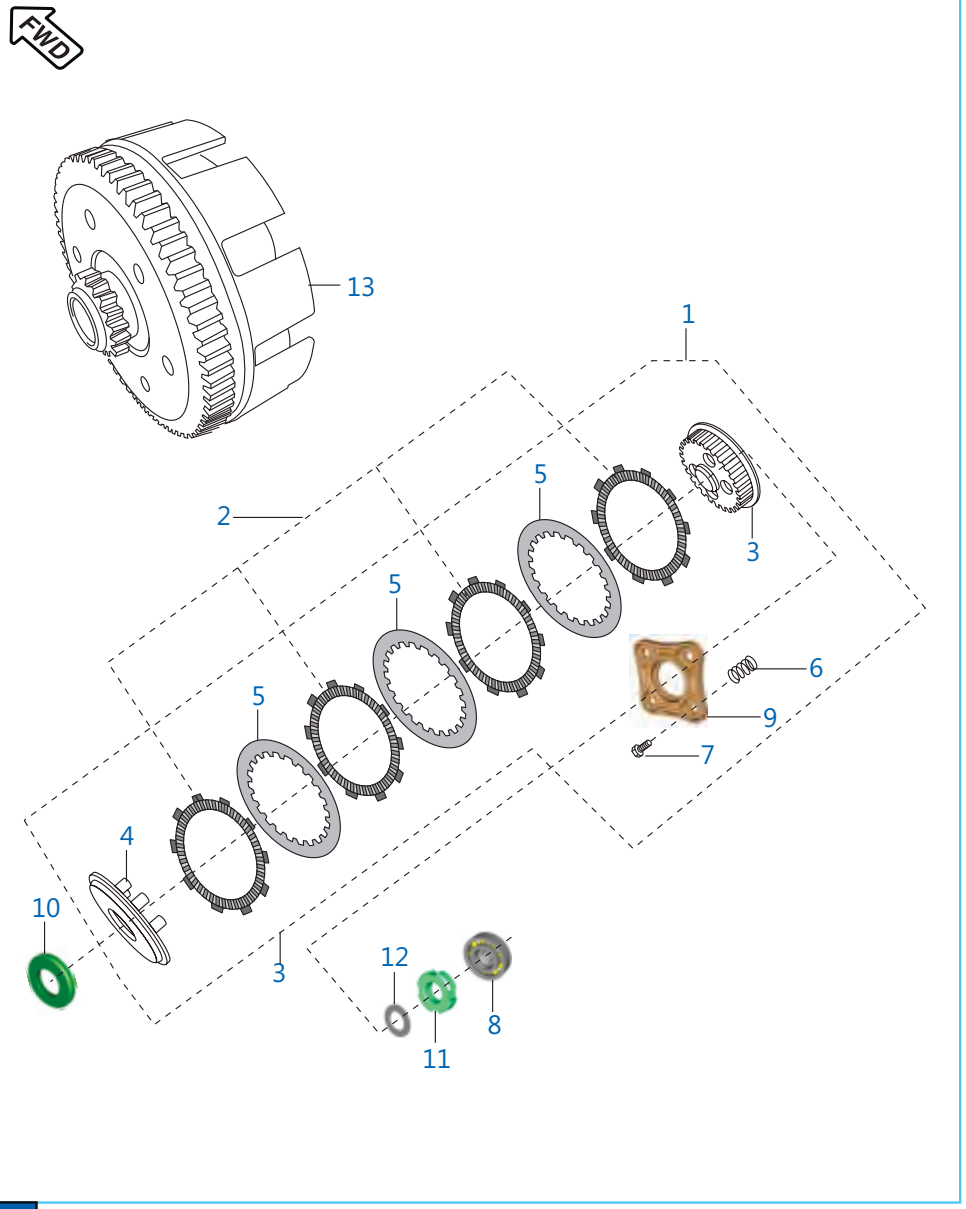

Plate No.: 16

Clutch Assembly

No.	Part No.	Description	Qty/Veh.	Remarks
1	DH 1022 14	Clutch Assembly Complete	1	
2	36 DH41 17	Disc Clutch Friction	5	
3	DH 1022 10	Clutch Center	1	
4	DH 1022 11	Plate Clutch Pressure	1	
5	PD 5514 33	Plate Clutch	4	
6	DH 1022 12	Spring Clutch Capacity	4	
7	DK 1015 74	Bolt	4	
8	DH 1017 95	Clutch Lifter Bearing	1	
9	JG 5514 43	Holder Clutch	1	
10	DH 1021 98	Washer Clutch Hub	1	
11	DH 1016 48	Nut Primary Drive Lock	1	LH Thread
12	39 2200 11	Washer Primary Drive Gear	1	
13	36 DH41 16	Kit Primary Drive & Driven Gear	1	Refer Kit Details

FWD Front Wheel Direction

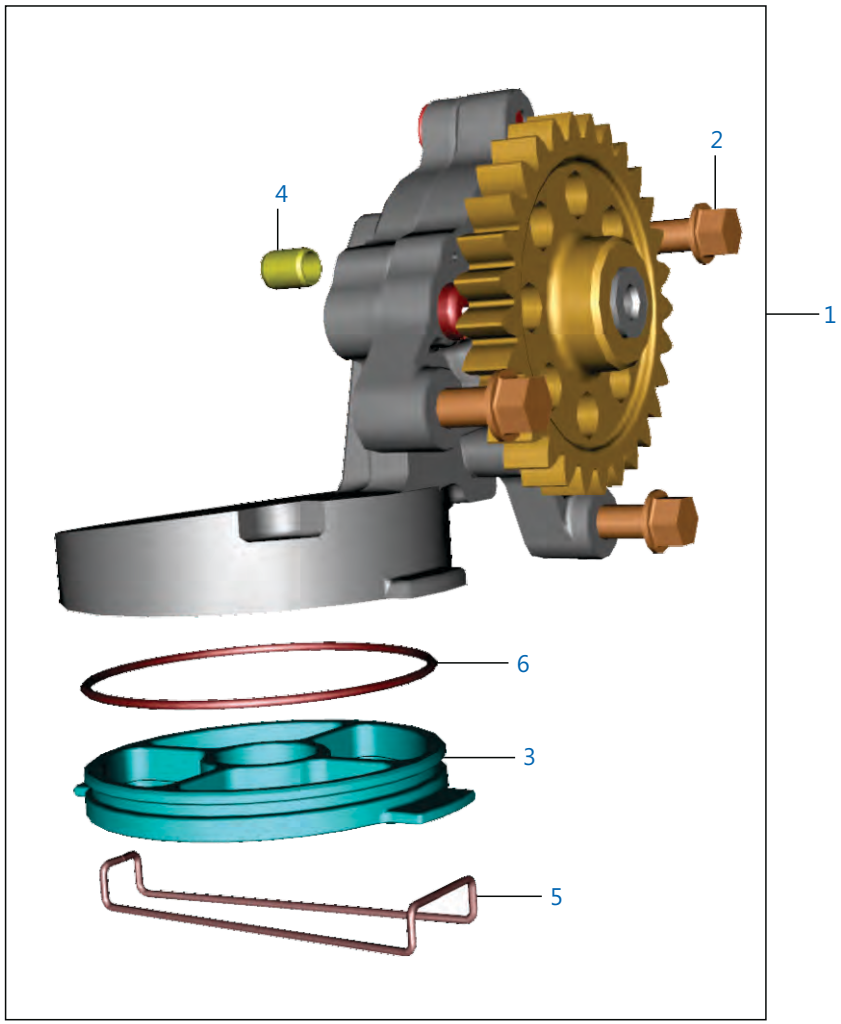

FWD Front Wheel Direction

Plate No.: 17

Oil Pump

No.	Part No.	Description	Qty/Veh.	Remarks
1	52 DH01 69	Oil Pump Assly	1	
2	39 1674 04	Hex. Bolt With Flange	3	
3	DH 1210 10	Mesh Filter Oil Pump	1	
4	39 1686 06	Hollow Dowel Pin	1	
5	DH 1210 35	Clip Mesh Oil Filter	1	
6	39 2194 21	'O' Ring	1	

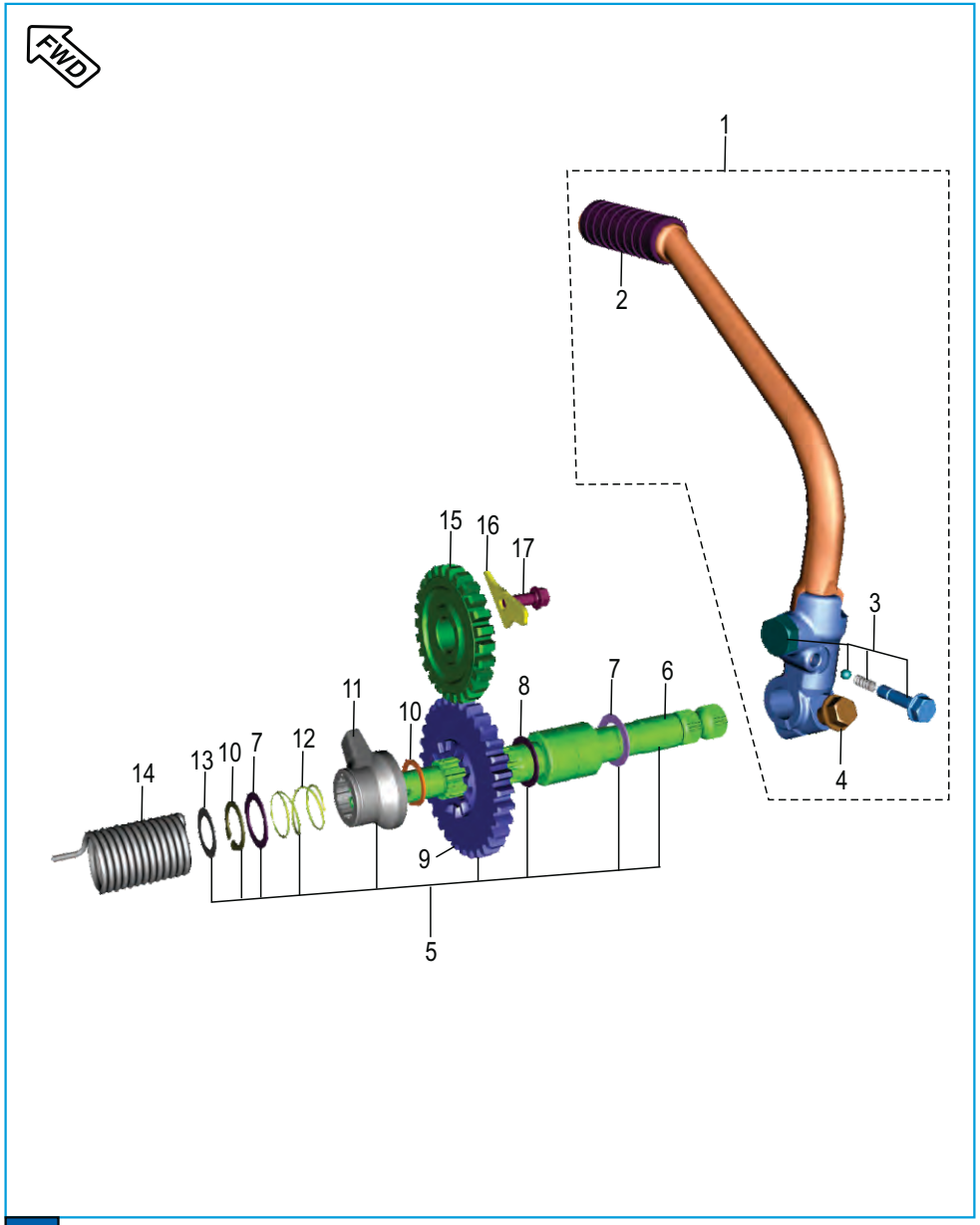

Front Wheel Direction

Plate No.: 18

Kick Starter Mechanism

No.	Part No.	Description	Qty/Veh.	Remarks
1	DH 1015 45	Lever Kick Starter Complete	1	
2	DD 1010 97	Damper	1	
3	36 DH10 08	Boss Kick Set	1	
4	DH 1013 21	Bolt Flange	1	
5	DH 1015 40	Spindle Kick Starter Assly	1	
6	DH 1015 39	Spindle Kick Shaft	1	
7	39 2344 11	Plain Washer	1	
8	39 2276 11	Washer	2	
9	DH 1013 53	Pinion Kick Starter	1	
10	39 0738 17	Circlip	2	
11	DH 1015 37	Ratchet Kick Starter	1	
12	DH 1011 21	Spring For Kick Starter Ratchet	1	
13	39 0993 11	Washer Plain	1	
14	DH 1011 25	Spring Kick Starter Return	1	
15	DH 1015 31	Gear Kick Idler	1	
16	DH 1015 38	Stopper	1	
17	DH 1013 85	Bolt Flanged	1	

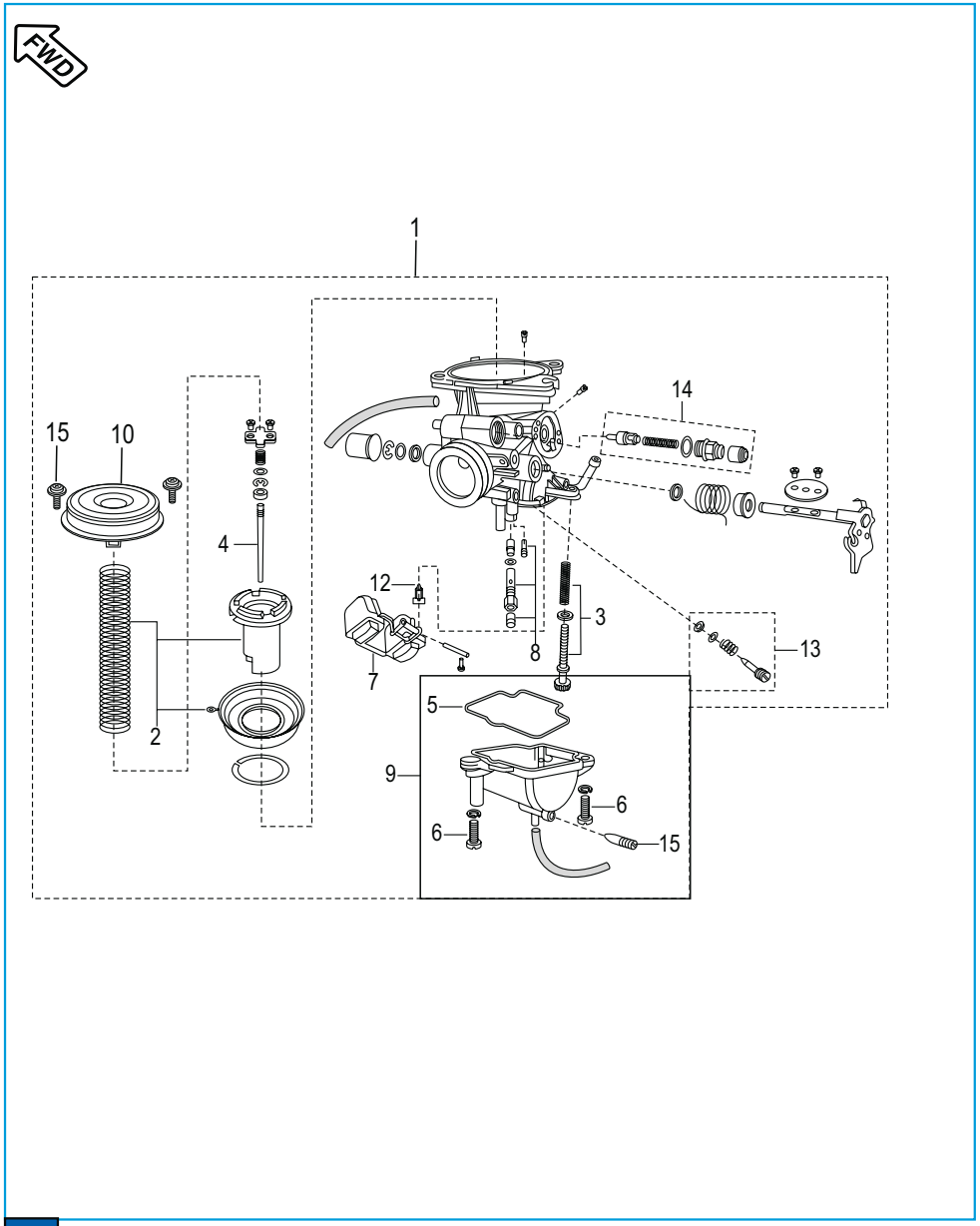

Plate No.: 19

Carburettor

No.	Part No.	Description	Qty/Veh.	Remarks
1	DH 1212 09	Carburetor Assly.	1	EVAP
	DH 1212 18	Carburetor Assly.	1	Non EVAP
2	36 DH41 19	Vacuum Piston Kit	1	
3	DH 1211 68	Idling Screw Kit	1	
4	DH 1211 41	Jet Needle (JN)	1	
5	DH 1210 57	"O" Ring	1	
6	JA 5812 33	Screw	2	
7	DH 1211 62	Float Assembly	1	
8	36 DH41 42	Jet Kit	1	Ref. Cir. IB 293
9	DH 1211 67	Kit Float Body Assembly	1	
10	DH 1210 44	Diaphragm Cover	1	
11	39 1780 01	Pan Head Screw	2	
12	DH 1210 93	Needle Assembly	1	
13	36 DH41 36	Pilot Screw Kit	1	Ref. Cir. IB 293
14	DJ 121 059	Set Plunger Assembly	1	
15	DH 1211 76	Drain Screw	1	

FWD Front Wheel Direction

Plate No.: 20

Air Filter

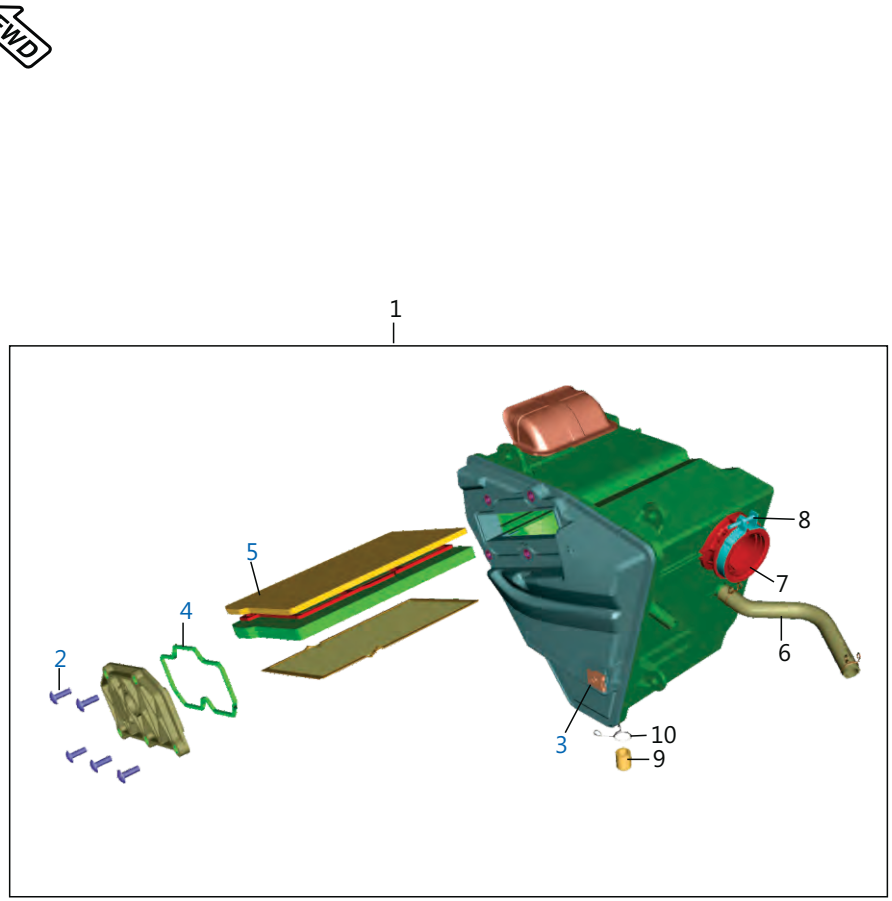

No.	Part No.	Description	Qty/Veh.	Remarks
1	DH 1212 02	Assly Air Filter for SAI	1	
2	KB UA05 14	Screw Pan Cross	5	
3	DJ 1810 65	Clip Nut	1	
4	DK 1210 15	O Ring	1	
5	DH 1022 77	Assly Element Filter	1	
6	DH 1022 32	Breather Pipe Clip Assly	1	
7	DH 1212 12	Tube Connecting	1	
8	DH 1211 90	Clip Band	1	
9	JP 5810 18	Tube Drain	1	
10	JY 5810 28	Clamp	1	

FWD Front Wheel Direction

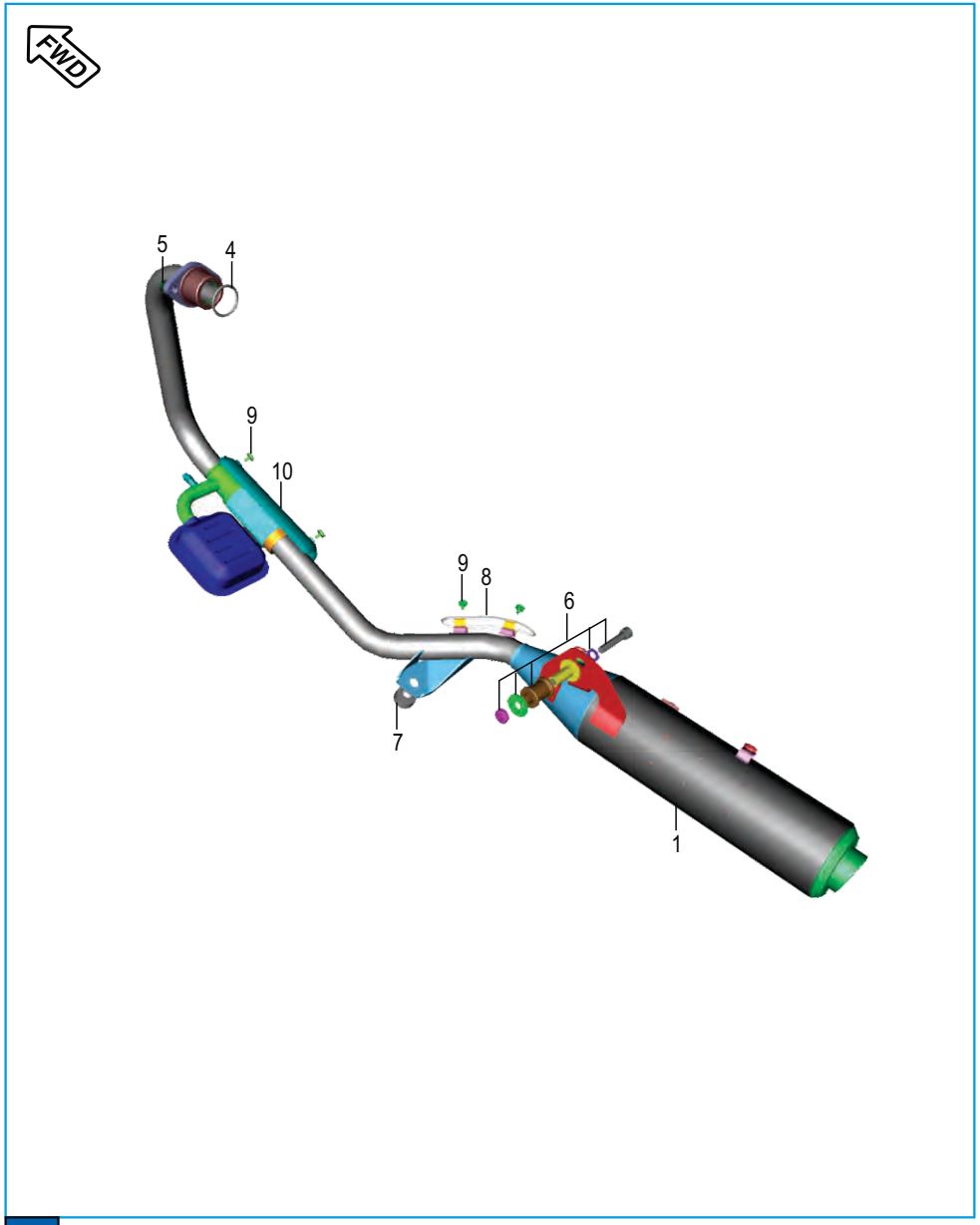

FWD Front Wheel Direction

Plate No.: 21

Silencer Assembly

No.	Part No.	Description	Qty/Veh.	Remarks
1	YD H190 03	Silencer W/O Shield	1	With CAT
	DH 1023 21	Silencer Assly	1	Non CAT
2	DH 1022 72	Shield Muffler	1	N.I
	DH 1023 49	Shield Muffler	1	Ref. Cir IB: 306
3	36 DH40 11	Kit Hardware Shield	1	N.I
4	DJ 1010 64	Gasket Exhaust	1	
5	39 1970 15	Flanged Nut	2	
6	36 DK00 09	Kit Hardware Silencer	1	
7	DG 1611 24	Damper (main Stand)	1	
8	DH 1022 63	Wire Shield Assly.	1	
	DH 1023 51	Shield Wire	1	Ref. Cir IB: 306
9	DH 1016 07	Truss Screw	4	
10	DH 1022 61	Shield CAT	1	
	DH 1023 50	Shield CAT	1	Ref. Cir IB: 306
11	JB 5910 59	Damper Shield Muffler	1	N.I.

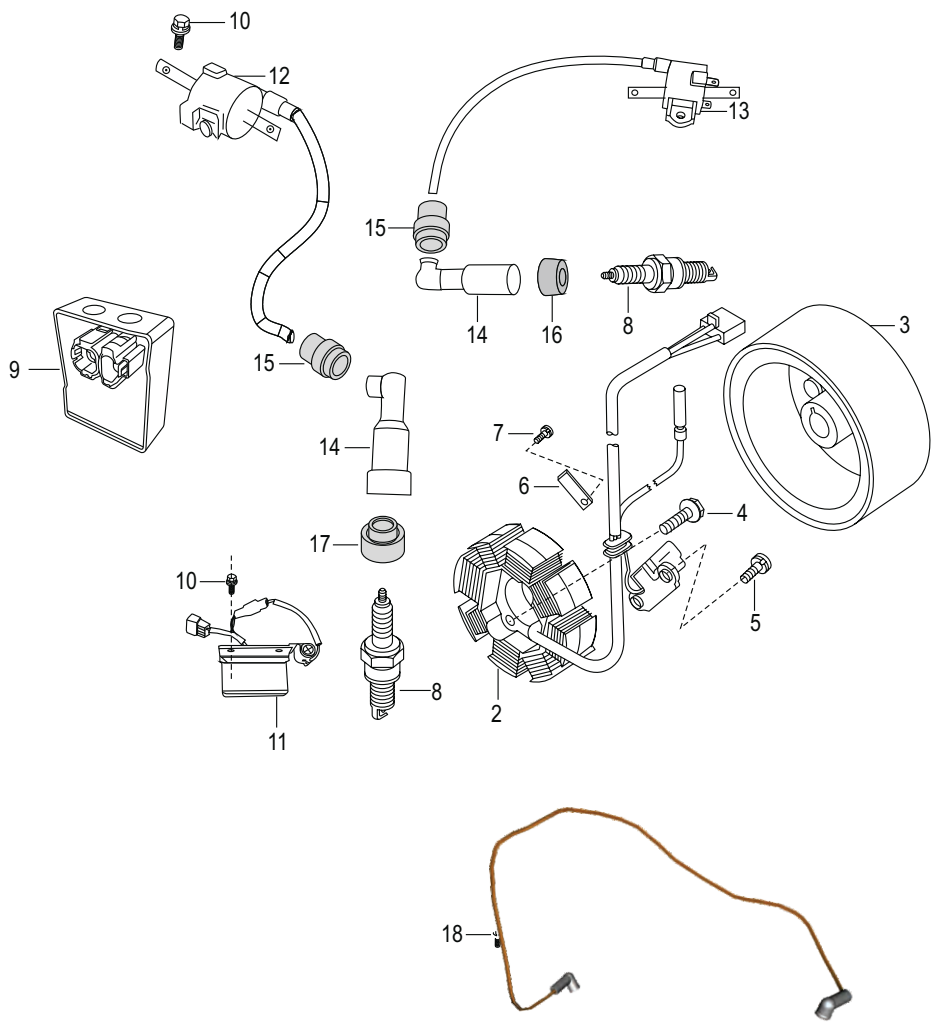

FWD Front Wheel Direction

Plate No.: 22

Magneto, CDI & H.T. Coil

No.	Part No.	Description	Qty/Veh.	Remarks
1	59 1000 02	Spring Dowel Sleeve	1	N.I.
2	DH 1110 81	Stator Assly. Comp	1	
3	DH 1110 82	Rotor Assly.	1	
4	DH 1013 86	Hex. Bolt With Flange	2	
5	DH 1013 81	Pan Head Screw	2	
6	DH 1011 99	Stopper Plate (wiring Harness)	1	
7	DH 1013 80	Screw Pan Head	1	
8	DG 1110 08	Spark Plug	2	
9	DH 1111 04	CDI Non Tps Assembly	1	
	DH 1111 17	CDI Assly.	1	Ref. Cir. IB: 293
10	39 1944 04	Flange Bolt	6	
11	DJ 2012 02	DC Regulator With Capacitor	1	
12	DH 1111 11	H.T. Coil 1	1	
13	DH 1111 13	H.T. Coil 2	1	
14	DH 1110 15	Cap Spark Plug	2	
15	DD 1110 12	Grommet H.T. Cable	2	
16	JD 3512 06	Grommet Spark Plug Cap	1	
17	DH 1110 16	Grommet Sleeve Spark Plug	1	
18	JC 2010 27	Cable Assly ST Motor to ST Relay	1	

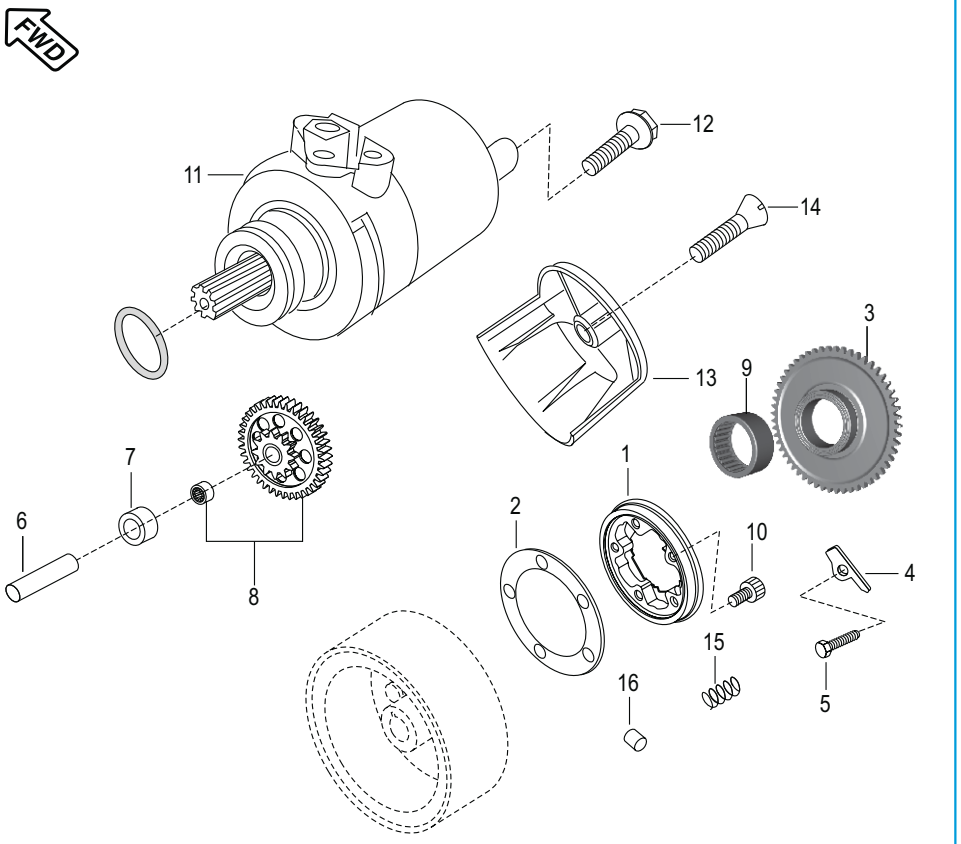

FWD Front Wheel Direction

Plate No.: 23

Starter Assembly

No.	Part No.	Description	Qty/Veh.	Remarks
1	36 DK00 76	Kit Body Comp. Starter Clutch	1	
2	DK 1016 05	Plate Roller Clutch	1	
3	JC 1011 14	Gear Starter Clutch	1	
4	DH 1015 81	Plate Starter Clutch Gear Return	1	
5	39 1075 04	Bolt	1	Ref.Cir. IB: 293
6	DK 1011 76	Shaft Starter Counter	1	
7	DH 1011 72	Collar Starter Counter	1	
8	JC 1011 45	Gear Comp. Starter Counter Assly.	1	
9	59 2000 07	Needle Roller Bearing	1	
10	39 0972 04	Bolt Socket	3	N.I.
11	DH 1110 84	Motor Assly. Starter	1	
12	DS 1013 53	Bolt	2	
13	56 DJ4E 1Y	Cover Starter Motor (MLT Silver)	1	
14	DH 1013 89	Slotted C'sunk Screw	1	
15	DK 1015 96	Spring	5	
16	DH 1011 63	Roller	5	

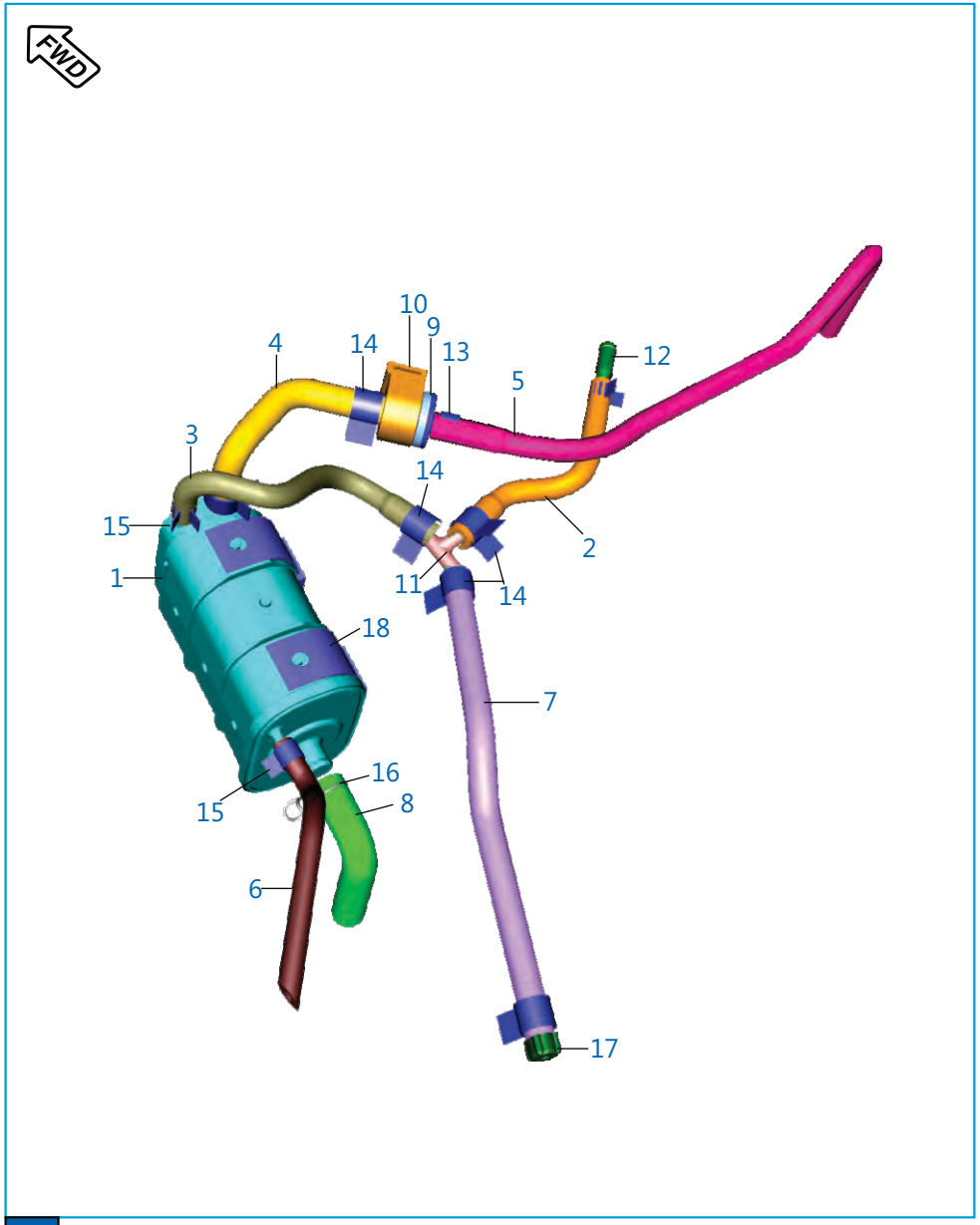

FWD Front Wheel Direction

Plate No.: 24

EVAP System

No.	Part No.	Description	Qty/Veh.	Remarks
1	JY 1710 77	Canister	1	
2	DH 1410 69	Tube Inline Connector	1	To T Connector
3	DH 1410 70	Tube T Connector To Canister	1	
4	DH 1410 71	Tube Canister To Purge Valve	1	
5	DH 1410 72	Tube Purge Valve To Carburetor	1	
6	DH 1410 73	Tube Canister Drain	1	
7	DH 1410 75	Tube Drain	1	
8	DH 1410 74	Tube Canister Breather	1	
9	JH 1710 38	Valve Purge	1	
10	JH 1710 48	Grommet Purge Valve	1	
11	GL 1710 36	Connector Breather & Vapor Tube	1	
12	JG 1710 86	Connector Tube Evap	1	
13	JY 1710 69	Spring Band Clamp 11.5 X 8.4	1	
14	JG 1710 29	Spring Band Clamp 13x12	5	
15	JY 1710 70	Spring Band Clamp 9 X8.4	3	
16	DG 1210 40	Clamp	1	
17	JY 1718 25	Plug Fuel Drain	1	
18	DH 1614 29	Strap Canister	2	

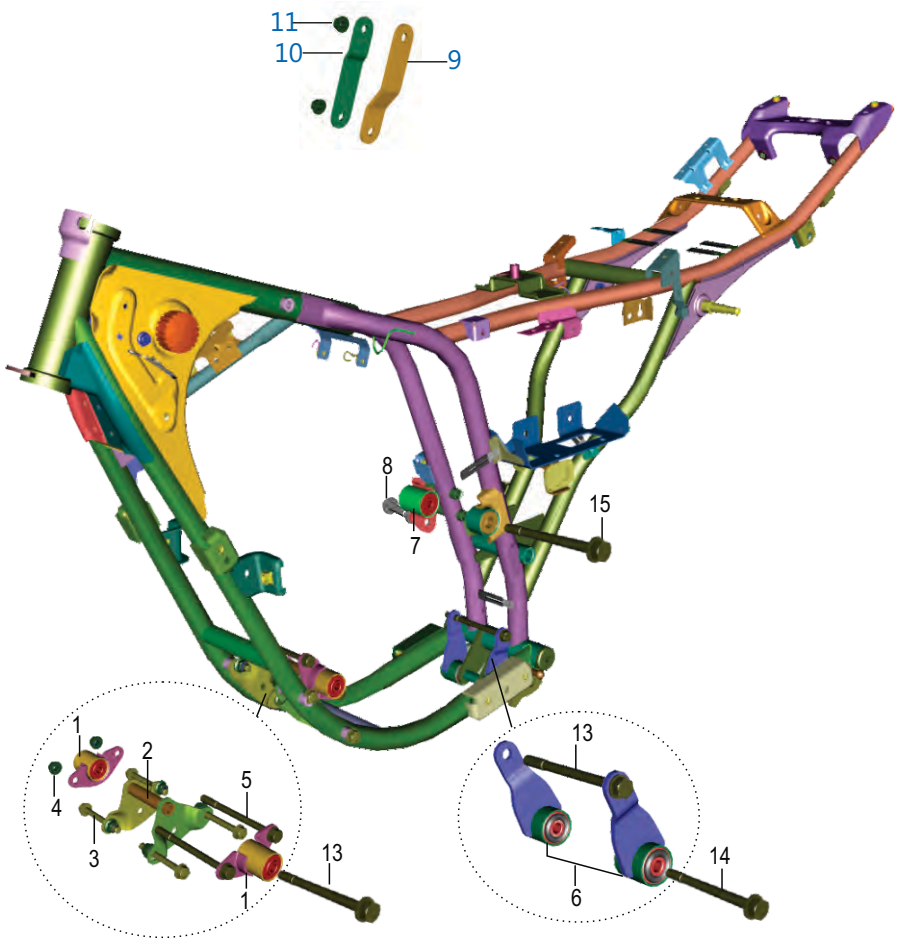

FWD Front Wheel Direction

Plate No.: 25

Engine Mountings

No.	Part No.	Description	Qty/Veh.	Remarks
1	DH 1614 95	Assly Eng Mtg Bkt FR	2	
2	DH 1615 40	Bkt Eng Mtg Front Loose	1	
3	39 2312 04	Hex HD Bolt	4	
4	39 1970 15	Hex Nut Flange	6	
5	39 2157 04	Hex Bolt	2	
6	DH 1614 97	Assly Bkt Eng Mtg Lower RR	2	
7	DH 1613 01	Bkt Comp Assy RH Eng Mtg RR	1	
8	39 2310 04	Bolt Hex	2	
9	DJ 1610 88	Bracket - LH :- Engine Hanger	1	
10	DJ 1810 89	Seal - Dust	1	
11	39 1970 15	Nut - Hexagon With Flange	2	
12	39 2658 04	Hex.hd Bolt/flang-m8	1	N.I.
13	39 2413 04	Bolt - Hexagon Head With Flange	1	
14	39 2412 04	Bolt - Hexagon Head With Flange	1	
15	39 2414 04	Bolt - Hexagon Socket Head Cap	1	

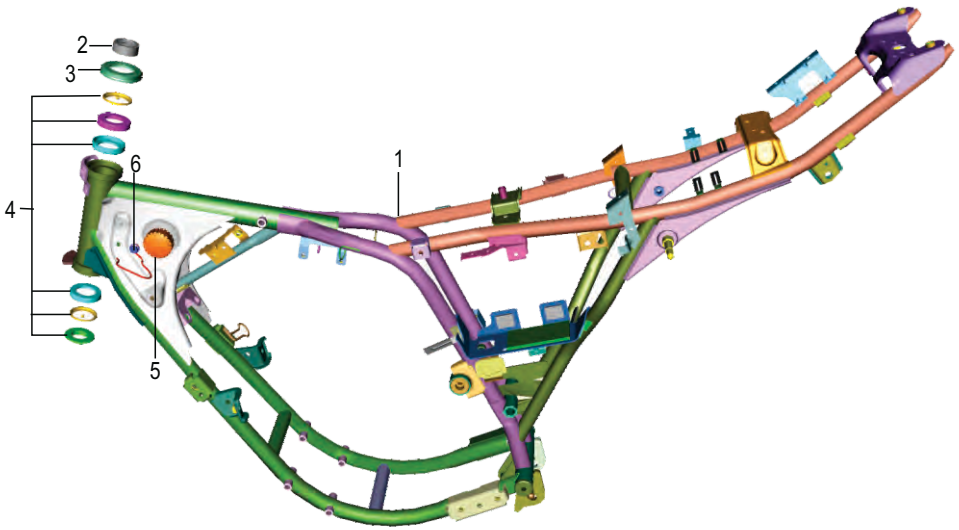

FWD Front Wheel Direction

Plate No.: 26

Frame and Frame Fittings

No.	Part No.	Description	Qty/Veh.	Remarks
1	DH 1614 99	Frame Assly	1	
2	DH 1811 22	Nut Steering	1	
3	JZ 1510 83	Cap Steering	1	
4	36 DS18 02	Kit Steering & Bearing	1	
5	DJ 1410 08	Damper Front	2	
6	39 1680 04	Bolt Flanged	2	

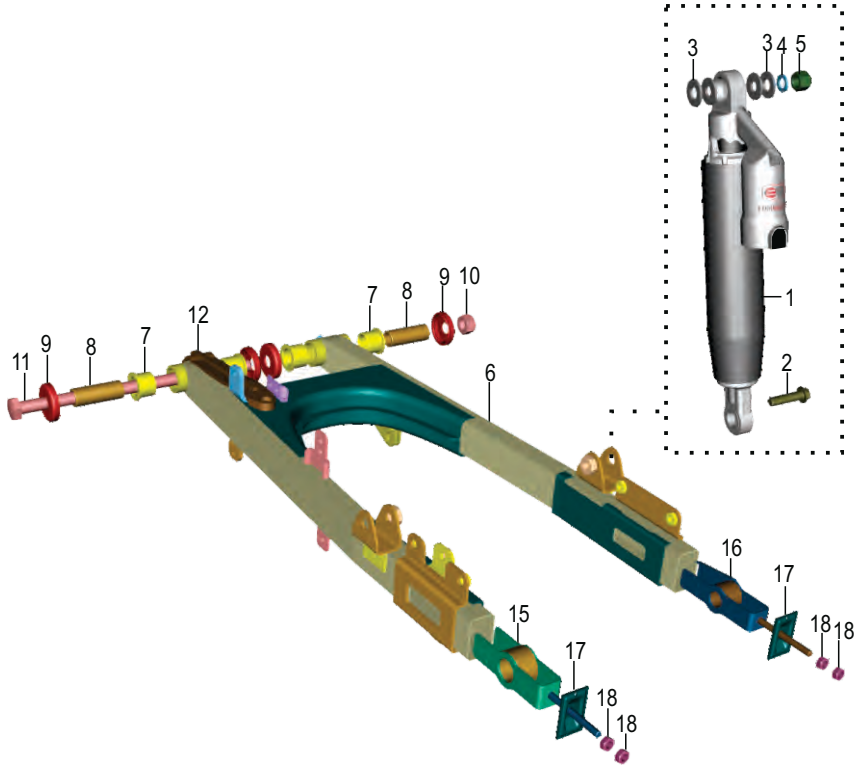

Front Wheel Direction

Plate No.: 27

Swing Arm / Rear Shock Absorber

No.	Part No.	Description	Qty/Veh.	Remarks
1	DH 1710 23	Rear Shock Absorber	2	
2	JB 1220 16	Bolt Pre-coated	2	
3	DG 1710 25	Washer	4	
4	39 1829 12	Spring Washer	2	
5	39 2366 15	Nut Domed Cap	2	
6	DJ 1710 31	Swing Arm Assly.	1	
7	DH 1710 14	Bush Swing Arm	4	
8	DH 1710 13	Collar Swing Arm	2	
9	DH 1710 15	Dust Seal Swing Arm	4	
10	DH 1710 19	'U' Nut Swing Arm	1	
11	DH 1710 12	Shaft Swing Arm	1	
12	DJ 1710 08	Chain Slider	1	
13	39 0553 02	Screw	2	N.I
14	39 0454 11	Plain Washer	2	N.I
15	DJ 1510 36	Adjuster Chain LH	1	
16	DJ 1510 37	Adjuster Chain RH	1	
17	DJ 1510 47	Plate Chain Adjuster	2	
18	39 0292 15	Hexagon Nut	4	

LH

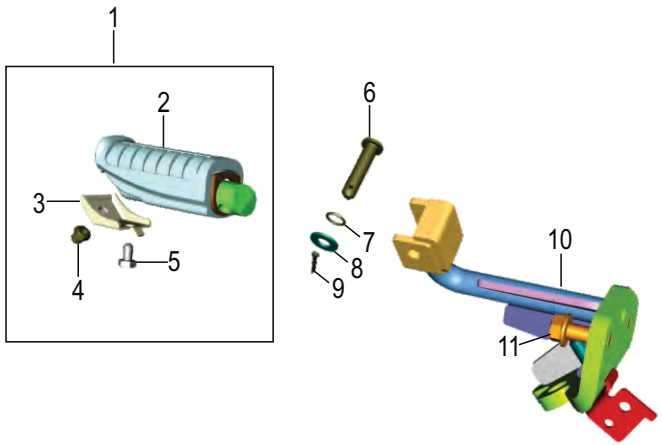

RH

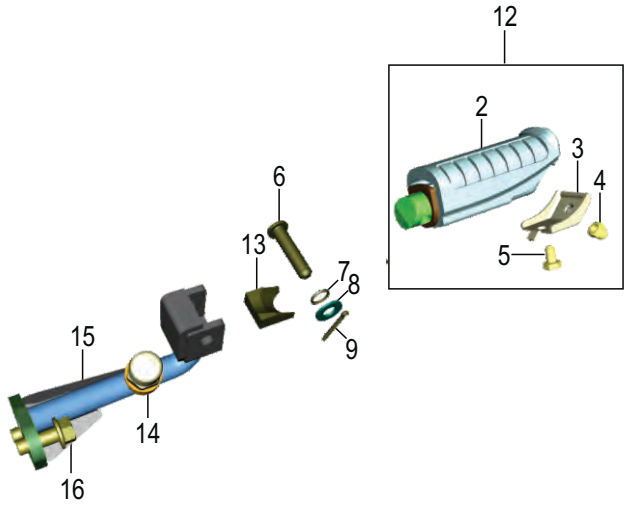

FWD Front Wheel Direction

Plate No.: 28

Rider Foot Rest

No.	Part No.	Description	Qty/Veh.	Remarks
1	DJ 1611 26	Step Assembly - Main :- LH	1	
2	DH 1610 53	Rubber - Main Step	2	
3	DH 1610 56	Plate Comp.	2	
4	39 0963 15	Nut - Domed Cap	2	
5	22 1504 51	Screw - Cylinder Securing	2	
6	DH 1610 57	Pin - Main Step	2	
7	30 1410 31	'O' Ring	2	
8	39 1040 11	Washer - Plain	2	
9	39 0784 08	Pin - Split	2	
10	DH 1614 68	Main Step LH	1	
11	LA D001 26	Bolt Flanged	2	
12	DJ 1611 27	Step Assembly - Main :- RH	1	
13	DJ 1610 90	Damper - Foot Step	2	
14	DH 1611 94	Stopper - Kick	1	
15	DH 1614 70	Main Step RH	1	
16	KA DA08 20	Bolt-Flange	2	

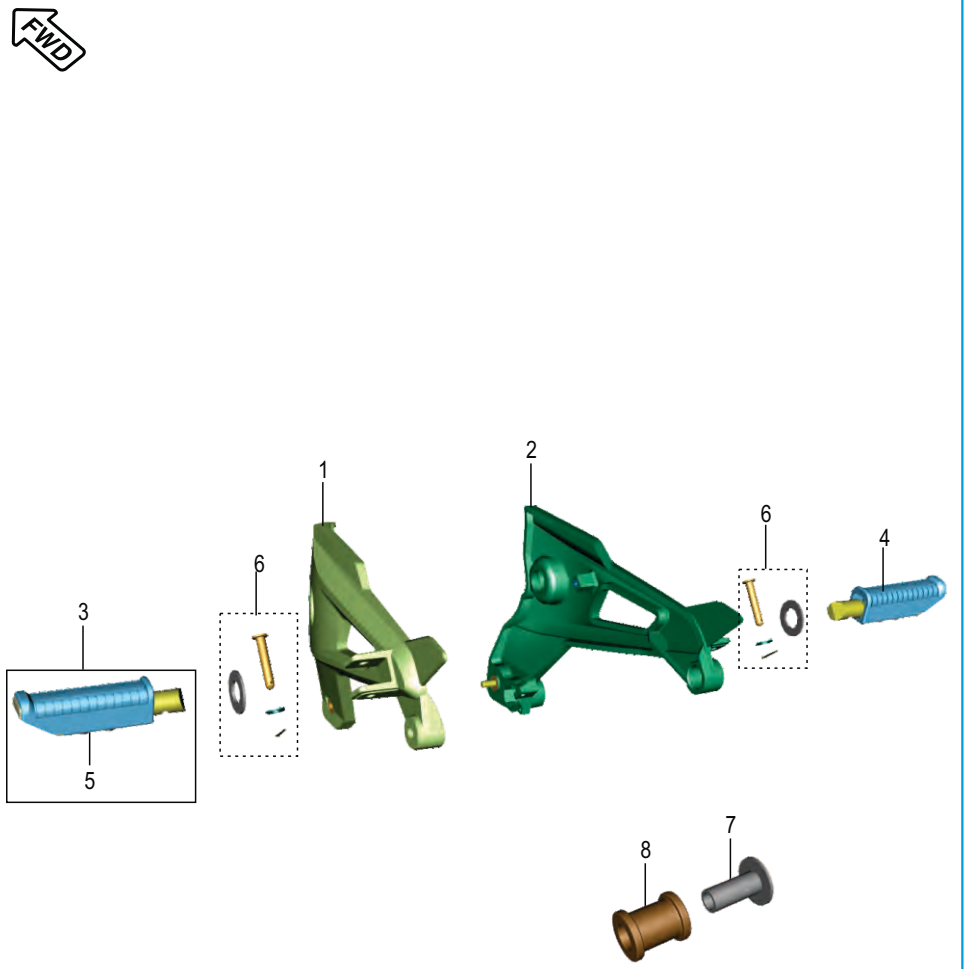

FWD Front Wheel Direction

Plate No.: 29

Pillion Setp Holder & Foot Rest

No.	Part No.	Description	Qty/Veh.	Remarks
1	56 DH3X 1Y	Holder Step LH Slate Grey	1	
2	56 DH3Y 1Y	Holder Step RH Slate Grey	1	
3	DJ 1611 28	Pillion Step Assly. Comp. LH	1	
4	DJ 1611 29	Pillion Step Assly. Comp. RH	1	
5	DJ 1611 22	Rubber Pillion Step	2	
6	36 DK00 13	Kit Hardware Pillion	2	
7	DJ 1612 78	Tube Silencer With Washer	1	
8	DH 1611 55	Damper Silencer	1	

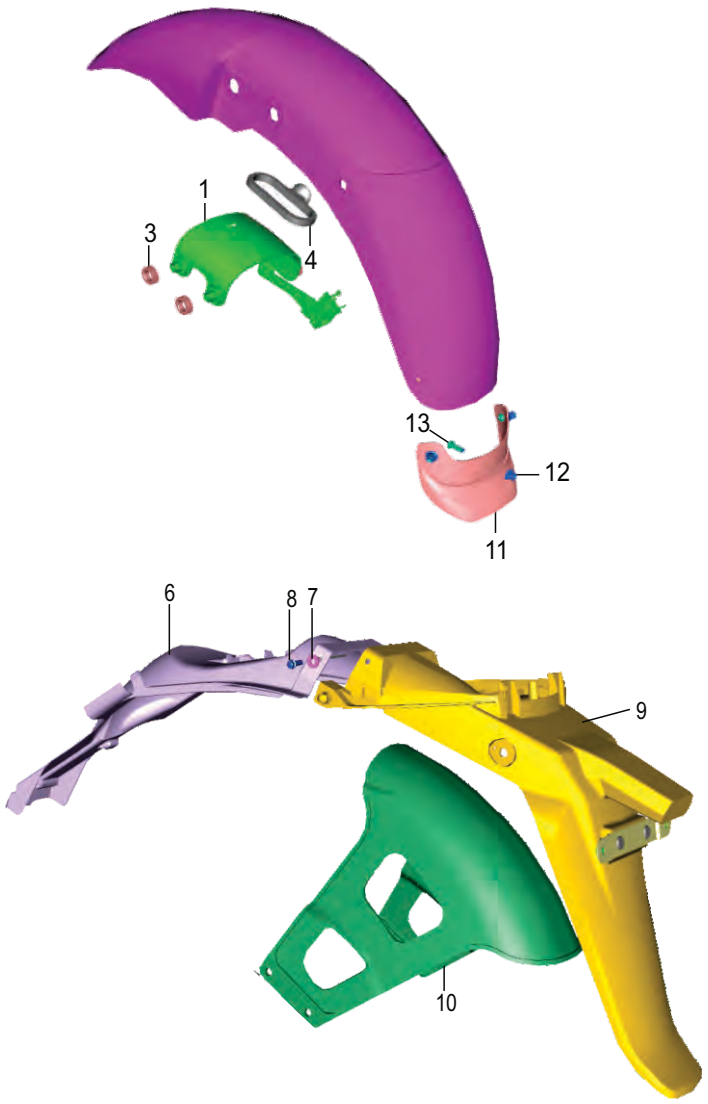

FWD Front Wheel Direction

Plate No.: 30

Mudguard - Front & Rear

No.	Part No.	Description	Qty/Veh.	Remarks
1	DH 1612 58	Brace Fender	1	
2	DG 1810 08	Socket Bolt	4	N.I.
3	DJ 1610 91	Grommet Front Fender	4	
4	DS 1611 25	Cable Guide	1	
5	DJ 1610 69	Nail For Cable Guide	1	N.I.
6	DH 1614 24	Fender Rear Front	1	
7	39 0711 11	Plain Washer	2	
8	39 1943 04	Flange Bolt	2	
9	DJ 1612 54	Fender Rear	1	
10	DJ 1612 21	Cover Mud Rear	1	
11	DH 1615 59	Flap Fender Front	1	
12	KC KE05 07	Nut Nyloc	3	
13	KB BJ05 14	Screw Pan	3	
14	KD BF05 12	Washer Plain	3	

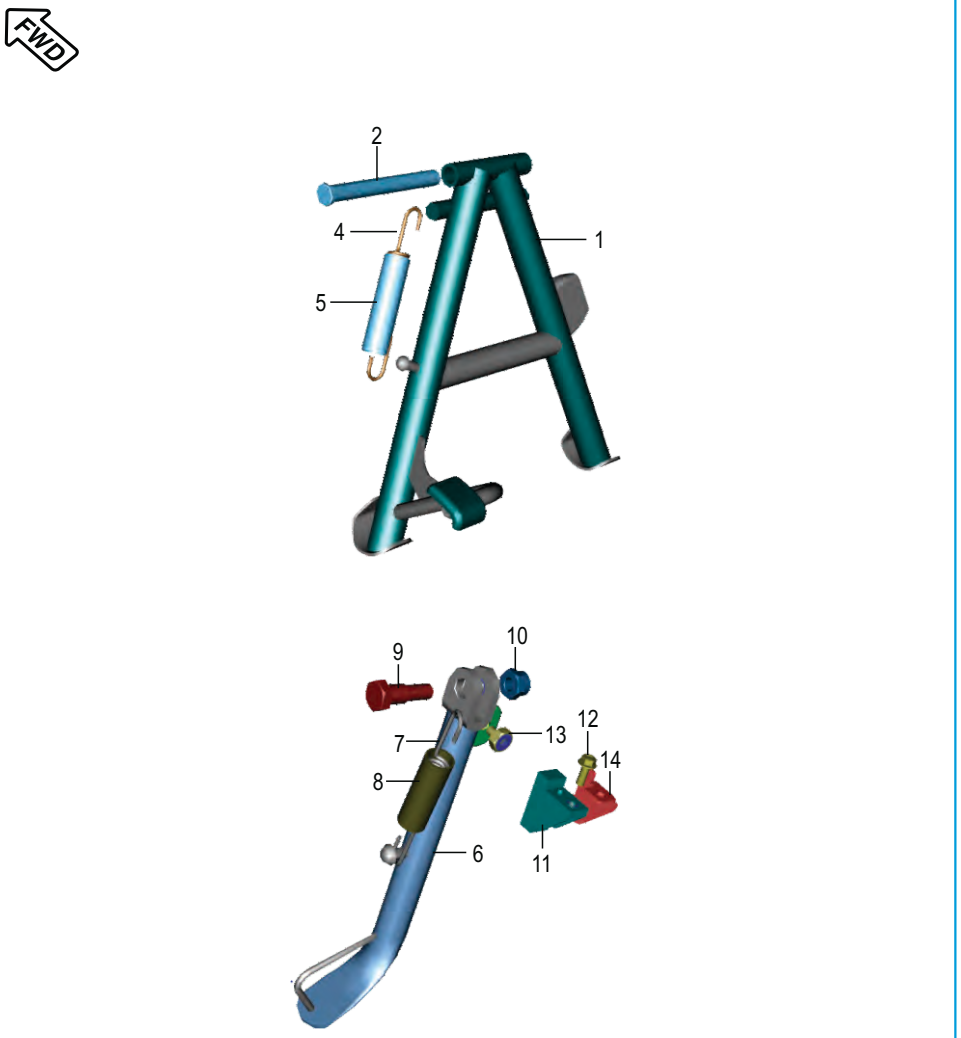

Front Wheel Direction

Plate No.: 31

Stand Assembly

No.	Part No.	Description	Qty/Veh.	Remarks
1	DJ 1612 14	Stand Main	1	
2	30 1611 57	Shaft Stand	1	
3	39 0787 08	Pin Cotter	1	N.I
4	DH 1611 21	Spring Main Stand	1	
5	DH 1611 45	Cover Spring Main Stand	1	
6	DH 1614 71	Stand Side	1	
7	DH 1610 66	Spring Side Stand	1	
8	DH 1611 46	Cover Spring Side Stand	1	
9	DF 1611 02	Bolt	1	
10	39 0422 15	Nut	1	
11	DH 2010 93	Side Stand Switch	1	
12	KA DD05 14	Bolt	1	
13	JL 4036 00	Magnet Holder	1	
14	JZ 1138 13	cover For Switch Side Stand	1	

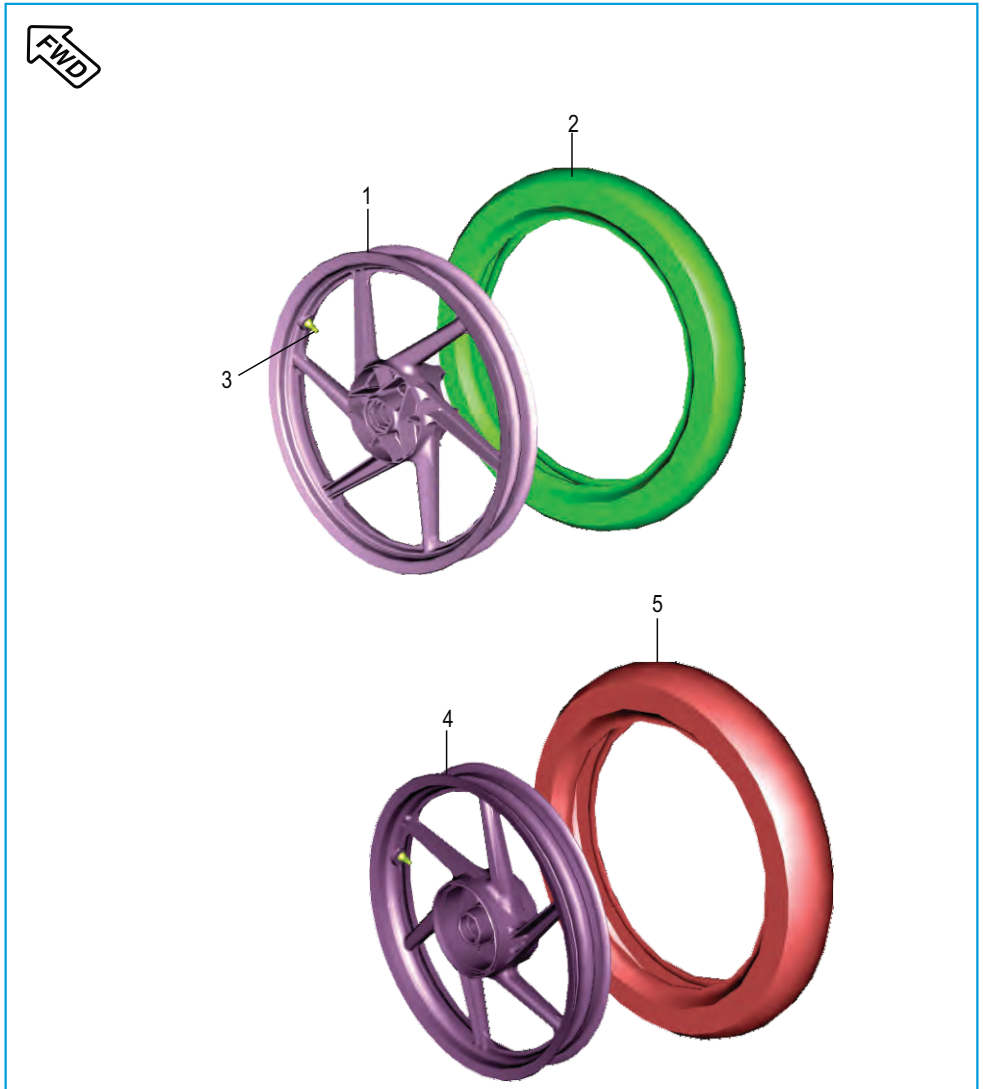

FWD Front Wheel Direction

Plate No.: 32

Tube / Tyre / Rim

No.	Part No.	Description	Qty/Veh.	Remarks
1	DH 1510 77	Wheel Rim Front (1.6 X 17 DC)	1	
2	JF 1310 10	Tyre Front Tubeless	1	
	56 DH6D 51	Wheel FR DH151077(Tubeless)	1	(Milky White) Ref.Cir IB: 306
3	DK 1510 26	Valve Tubeless tyre	1	
4	DH 1510 79	Wheel Rim Rear	1	
5	JF 1312 11	Tyre Rear Tubless	1	
	56 DH6E 51	Wheel RR Dh151079 (Tubeless)	1	(Milky White) Ref.Cir IB: 306

Plate No.: 33

Front Hub

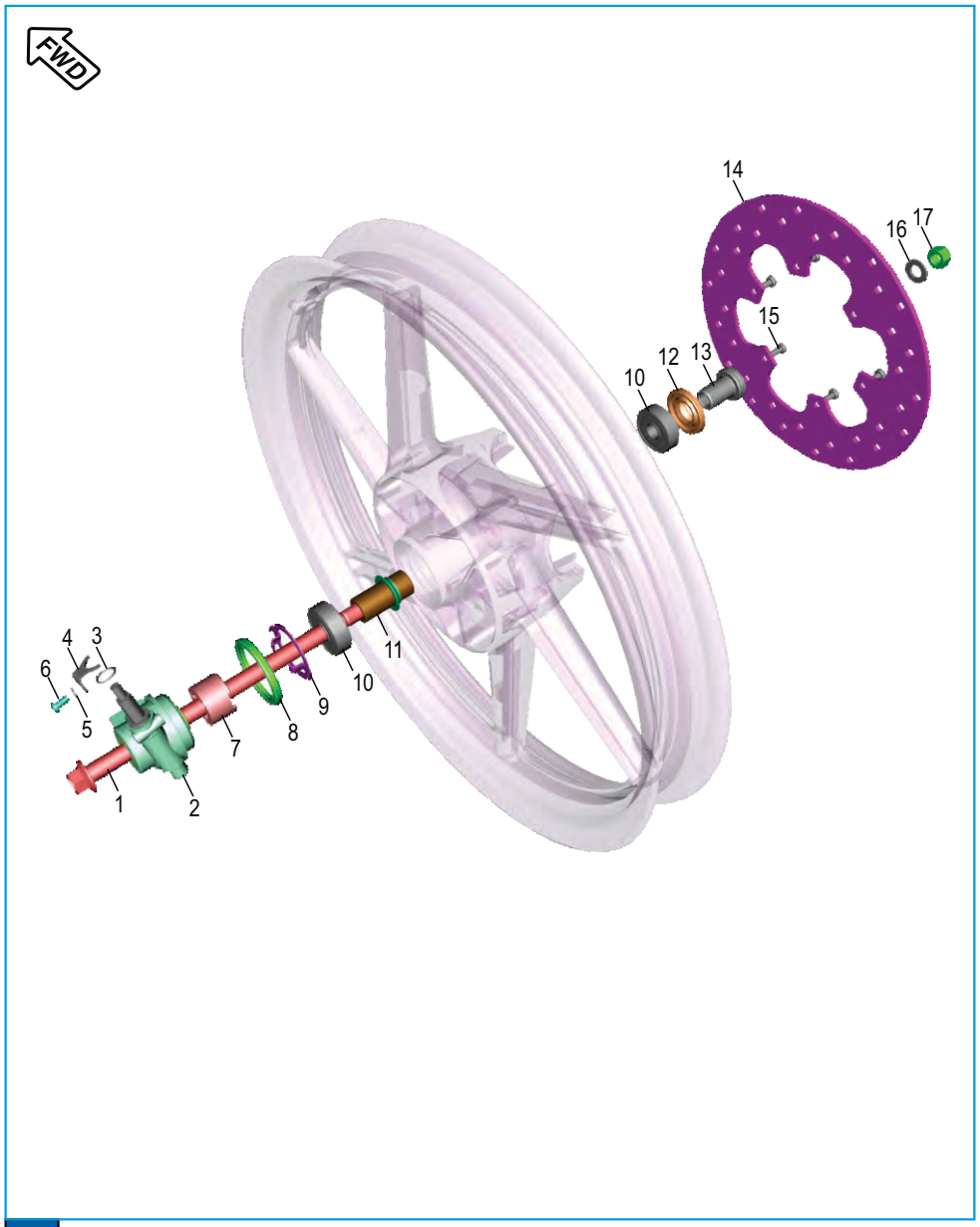

No.	Part No.	Description	Qty/Veh.	Remarks
1	JB 1310 17	Axle Front	1	
2	JN 1316 03	Case Meter Assly	1	
3	59 2100 19	O Ring	1	
4	30 1511 18	Stopper for Bushing	1	
5	39 0900 12	Washer Spring	1	
6	KB BM04 08	Screw Pan Cross	1	
7	DJ 1510 94	Rotor Speedo	1	
8	DE 1510 08	Seal Oil	1	
9	DE 1510 12	Plate Drive	1	
10	KP BC63 01	Bearing Ball	2	
11	DE 1510 06	Spacer Assly	1	
12	30 1510 33	Seal oil	1	
13	DJ 1811 31	Wheel Spacer	1	
14	DH 1510 81	Disc	1	
15	DH 1015 40	Bolt Socket Head	6	
16	JB 1310 18	Plain Washer	1	
17	59 1500 03	Nut U	1	

FWD Front Wheel Direction

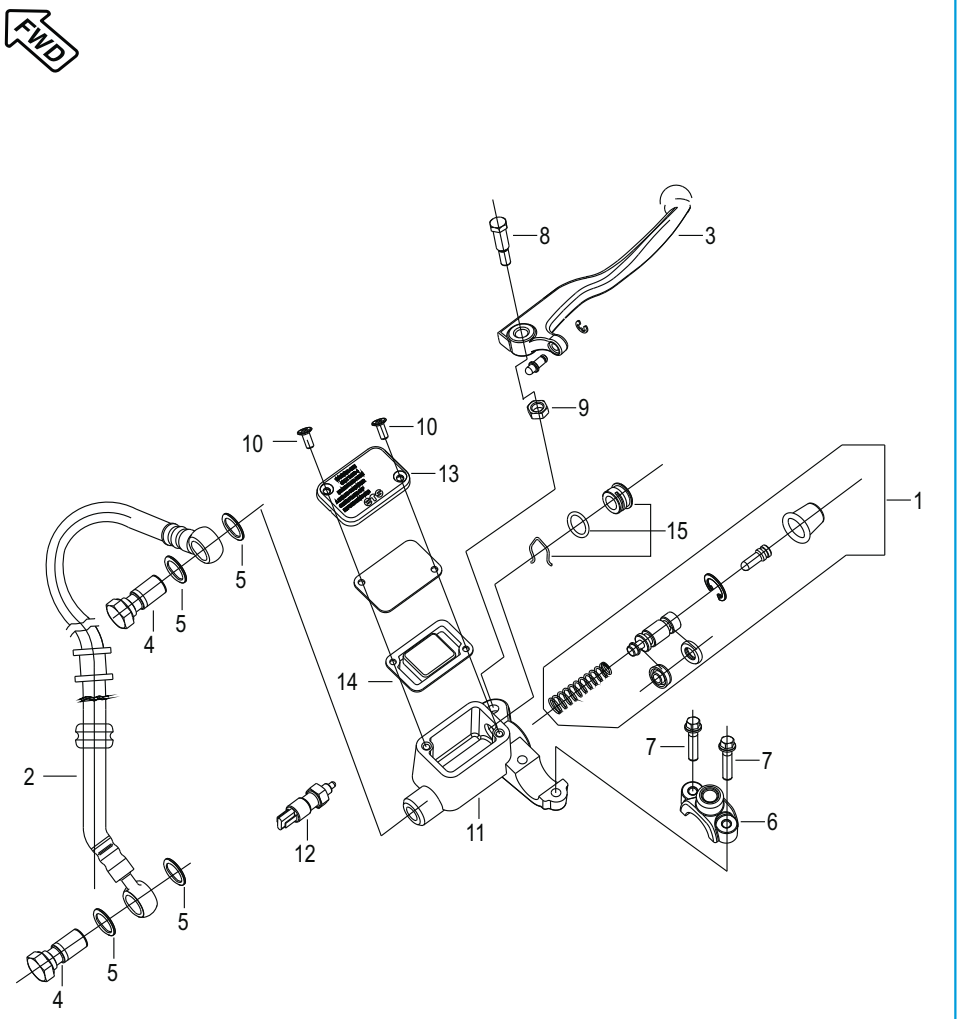

Front Wheel Direction

Plate No.: 34

FR. Master Cylinder

No.	Part No.	Description	Qty/Veh.	Remarks
1	DE 1910 43	Major Kit - Master Cylinder	1	
2	DJ 1510 76	Hose Brake Front	1	
3	DJ 1910 57	Lever Grip RH	1	
4	DK 1510 69	Banjo Bolt	2	
5	DE 1910 10	Washer Copper	4	
6	DJ 1910 27	Clamp Holder RH	1	
7	DJ 1910 28	Bolt	1	
8	DJ 1910 29	Bolt Front Brake Lever	1	
9	DJ 1910 30	Nut Flanged	1	
10	DJ 1910 31	Screw	2	
11	DJ 1910 56	Cylinder Master	1	
12	DJ 2011 09	Front Brake Switch	1	
13	DJ 1910 34	Reservoir Cover	1	
14	DJ 1910 35	Diaphragm	1	
15	36 DH19 02	Oil Window Kit	1	

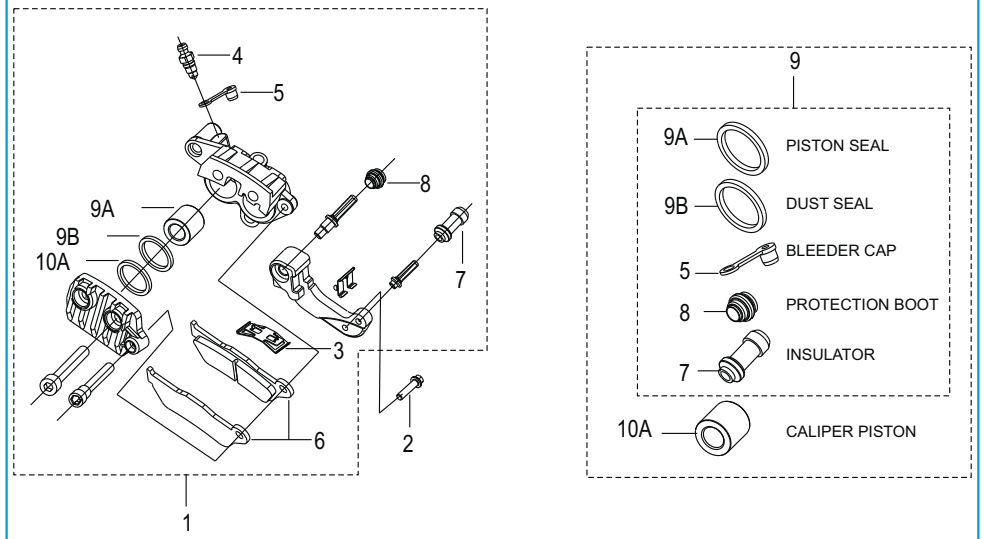

FWD Front Wheel Direction

Plate No.: 35

Front Disc Brake

No.	Part No.	Description	Qty/Veh.	Remarks
1	DG 1510 89	Caliper Assly. Front	1	
2	59 0400 48	Bolt Flanged	2	
3	DE 1510 48	Spring Pad	1	
4	DE 1510 46	Bleeder Screw	1	
5	DE 1510 47	Bleeder Cap	1	
6	DE 1510 37	Disc Pad Set	1	
7	DE 1510 43	Insulator	1	
8	DJ 1510 73	Protection Boot	1	
9	DJ 1510 74	Minor Kit - Caliper	1	
10	DJ 1510 75	Major Kit - Caliper	1	

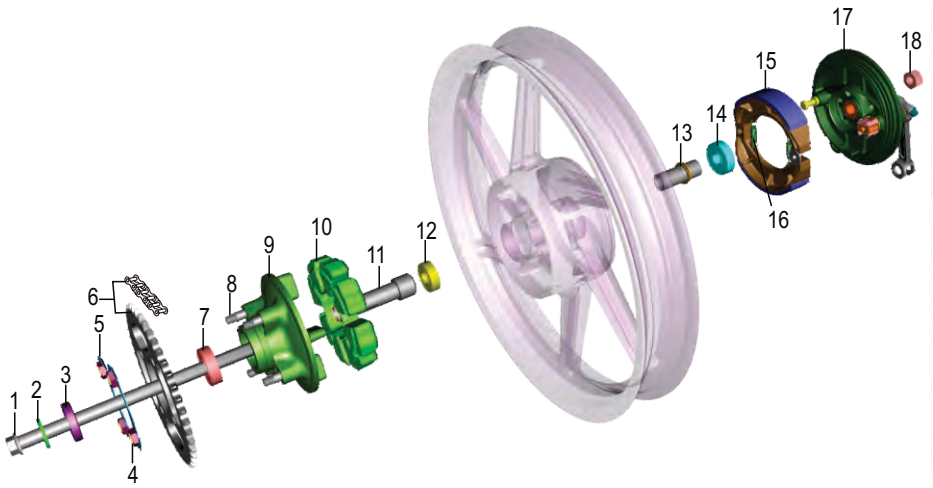

Front Wheel Direction

Plate No.: 36

Rear Hub

No.	Part No.	Description	Qty/Veh.	Remarks
1	DJ 1510 32	Axel	1	
2	LD B000 01	Washer Plain	1	
3	30 1510 82	Seal Oil	1	
4	LC B000 05	Nut Hex	4	
5	PF 1312 20	Washer Lock for Nut	2	
6	36 DH40 13	Kit chain Sprocket Kit	1	
7	KP BC60 04	Bearing Ball	1	
8	DS 1510 73	Stud	4	
9	DS 1510 68	Coupling	1	
10	DK 1510 94	Coupling Rubber	1	
11	DJ 1510 33	Sleeve	1	
12	KP BC62 02	Bearing Ball	1	
13	30 1510 75	Collar Bearing	1	
14	KP BC63 02	Bearing Ball	1	
15	JN 1318 12	Shoe Brake Assly (Non Asbestos)	1	
16	30 1510 69	Spring	2	
17	DJ 1511 15	Panel Assembly (Non Asbestos)	1	
18	DH 1710 19	U Nut Swing Arm	1	

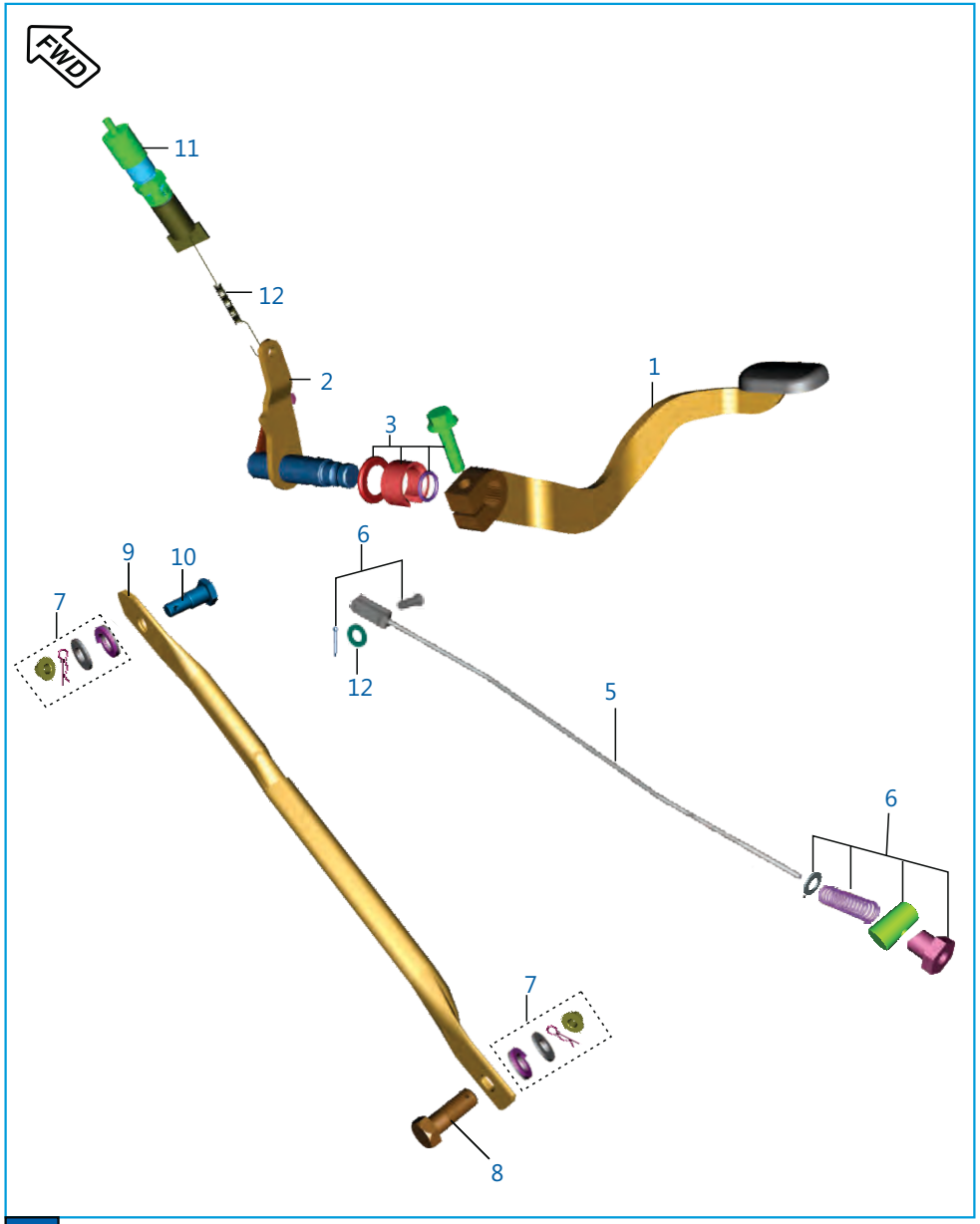

FWD Front Wheel Direction

Plate No.: 37

Rear Brake Padal

No.	Part No.	Description	Qty/Veh.	Remarks
1	DH 1910 01	Lever Brake Pedal	1	
2	DJ 1910 21	Shaft Assly. Brake Pedal	1	
3	36 DK00 16	Kit Hardware Brake Pedal	1	
4	DH 1910 06	Spring	1	N.I
5	DJ 1910 10	Rod Assly. Brake	1	
6	36 DH40 14	Kit Hardware Rod Brake	1	
7	36 DH40 15	Kit Hardware Rod Torque	1	
8	30 1510 95	Hex. Bolt	1	
9	DJ 1510 42	Rod Torque	1	
10	DH 1510 29	Hex. Bolt	1	
11	31 2010 79	Rear Brake Switch	1	
12	DH 1910 12	Spring Brake Switch	1	

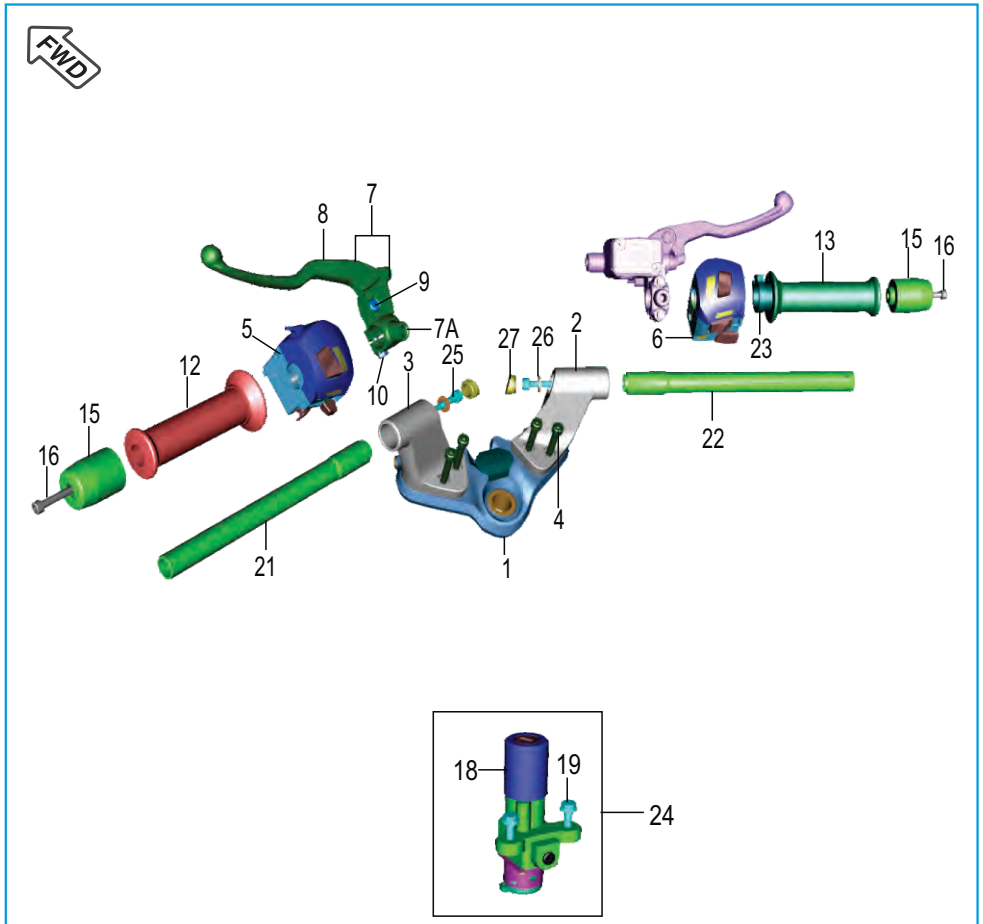

Plate No.: 38

Handle Bar

No.	Part No.	Description	Qty/Veh.	Remarks
1	DH 1811 35	Upper Bracket	1	
2	DH 1811 33	Holder Handle RH	1	
3	DH 1811 31	Holder Handle LH	1	
4	KA CA08 30	Socket Bolt	4	
5	JF 4014 00	Control Switch LH	1	
6	JD 4014 00	Control Switch RH	1	
7	DJ 1910 82	Lever & Support Holder Assly	1	
7A	DJ 1910 81	Holder LH	1	
8	DJ 1910 83	Lever LH	1	
9	DL 1910 14	Stud Lever Handle	1	
10	KA DD06 25	Bolt Flange	1	
11	36 DU19 01	Kit Adjusting Screw	1	N.I
12	DH 1910 07	Grip LH	1	
13	DH 1910 08	Grip RH	1	
14	DH 1910 19	Boot for lever LH	1	N.I
15	DK 1810 43	Handle bar weight	2	
16	39 2427 04	Hex. Soc. Hd. Cap Screw	2	
17	39 1184 15	Nut Nyloc M5 x 0.8	1	N.I
18	JB 4014 02	Switch Assly. Ignition	1	
19	39 1943 04	Flange Bolt	2	
20	DJ 2012 46	Clutch Switch (Transil Diode)	1	N.I.
21	DK 1810 82	Handle bar tube assly. LH	1	
22	DK 1810 86	Handle bar tube assly. RH	1	
23	DH 1910 17	Pipe throttle	1	
24	DH 1811 30	Lock set 3 in 1 with Tank cap	1	EVAP
	DH 1811 19	Lock set 3in 1	1	Non EVAP
25	LA C000 20	Bolt Socket Head *	2	
26	39 1180 11	Washer	2	
27	DH 1810 99	Rubber Plug	2	

FWD Front Wheel Direction

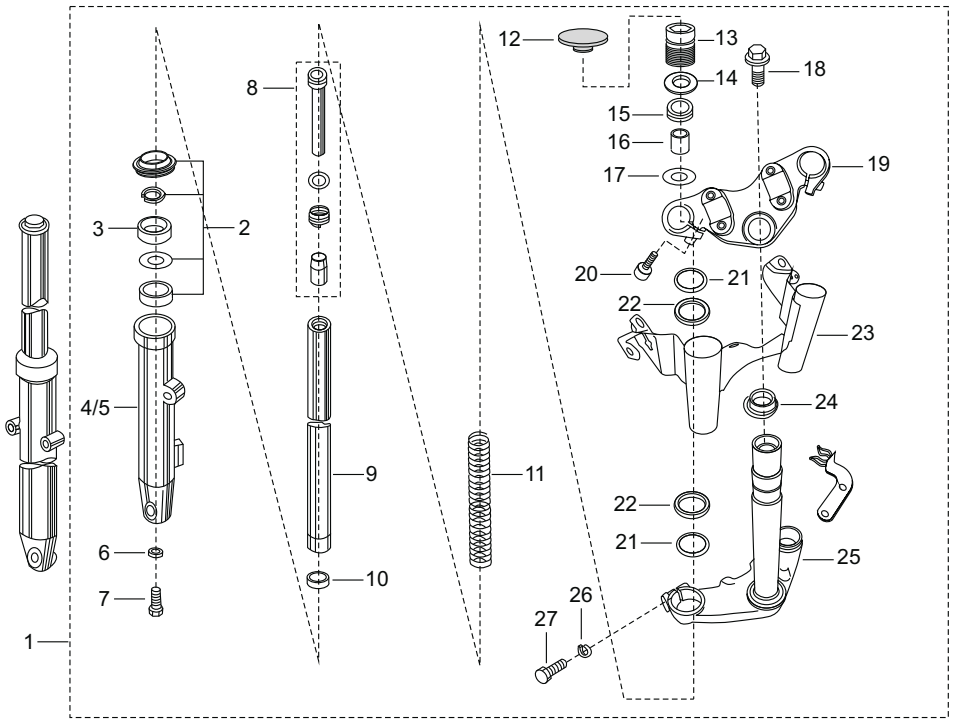

FWD Front Wheel Direction

Plate No.: 39

Front Fork

No.	Part No.	Description	Qty/Veh.	Remarks
1	DH 1811 23	Fork Front	1	
2	36 DK00 20	Kit Outer Tube	1	
3	DJ 1810 87	Oil Seal	2	
4	DH 1810 63	Outer Tube LH	1	
5	DH 1811 01	Outer Tube RH	1	
6	30 1810 26	Gasket	2	
7	KA CF08 30	Bolt	2	
8	36 DH41 15	Cylinder Comp. Fork	2	
9	DH 1811 27	Pipe Comp. Suspension Inner	2	
10	DS 1810 71	Slide Bush	2	
11	DH 1811 29	Spring Front Fork	2	
12	DH 1810 09	Grommet Top	2	
13	DH 1810 15	Bolt Fork	2	
14	30 1810 29	'O' Ring	2	
15	31 1810 99	Rebound Spring	2	
16	DH 1811 28	Spacer Tube	2	
17	DS 1810 72	Washer	2	
18	59 0400 07	Bolt	1	
19	DH 1811 35	Holder Fork Upper	1	
20	DG 1810 08	Socket Bolt	2	
21	DJ 1810 85	Cushion Rubber	2	
22	DJ 1810 52	Cover Trail B	4	
23	DH 1810 92	Lamp Shade Asly.	1	
24	30 1810 09	Bearing Cone	1	
25	DJ 1810 41	Holder Fork Under	1	
26	39 0789 12	Spring Washer	2	
27	39 1813 04	Bolt	2	
28	DH 1811 24	Leg Assly LH	1	
29	DH 1811 25	Leg Assly RH	1	

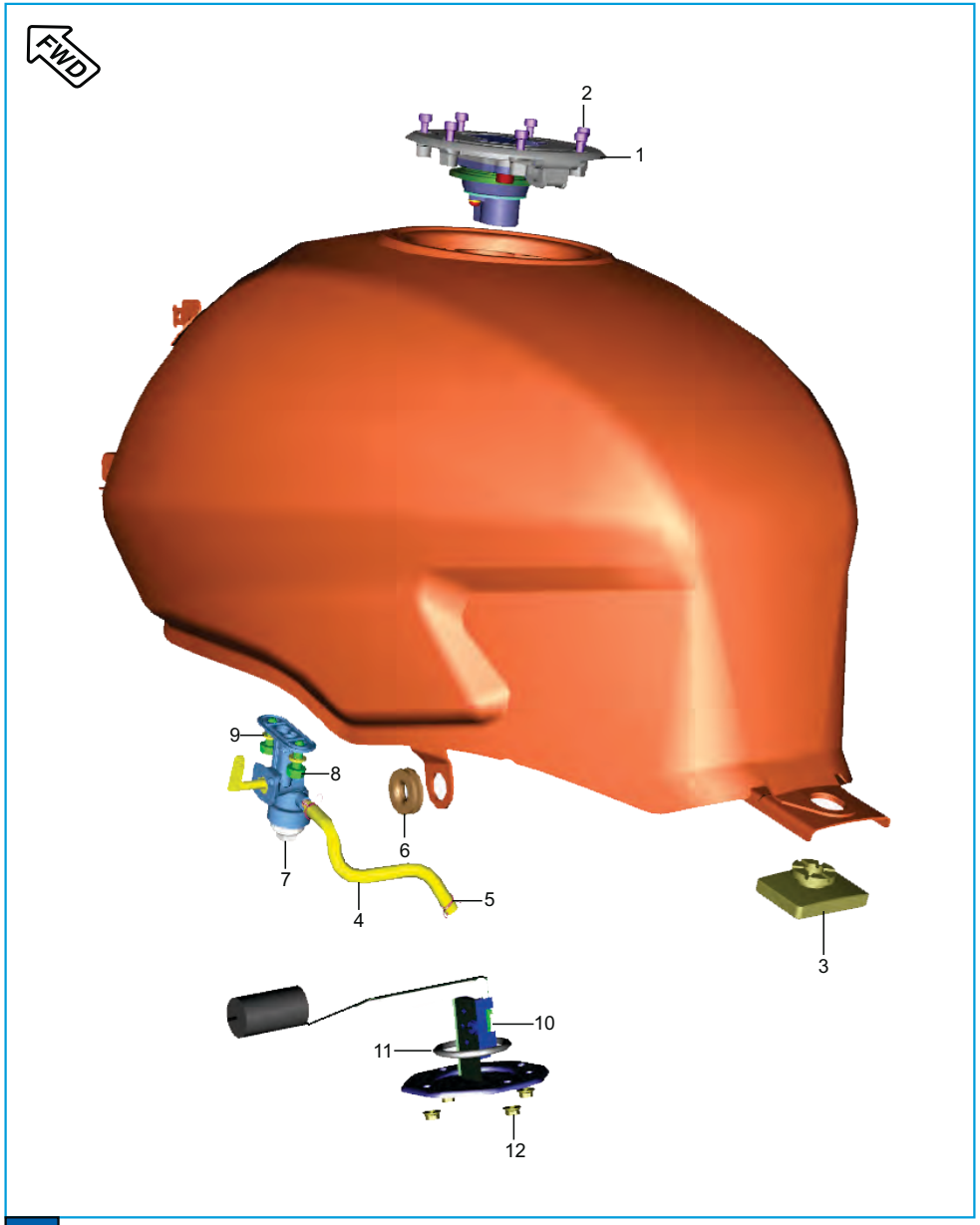

FWD Front Wheel Direction

Plate No.: 40

Cap Tank & Gauge Fuel

No.	Part No.	Description	Qty/Veh.	Remarks
1	DH 1811 30	Lock Seat with Cap	1	EVAP
	DH 1410 50	Cap Tank	1	Non EVAP
2	KA CA05 16	Bolt Socket	7	
3	DH 1410 23	Damper Rear	1	
4	52 DJ04 49	Fuel Pipe With Clamp	1	
5	33 1410 08	Clamp	2	
6	DH 1611 58	Grommet Side Cover RR	2	
7	DJ 1410 56	Fuel Cock	1	
8	DD 1412 27	Bolt Flange	2	
9	39 0740 11	Washer Plain	2	
10	DK 2010 65	Tank Unit	1	
11	DK 1410 28	O Ring	1	
12	KC GA05 05	Nut	4	

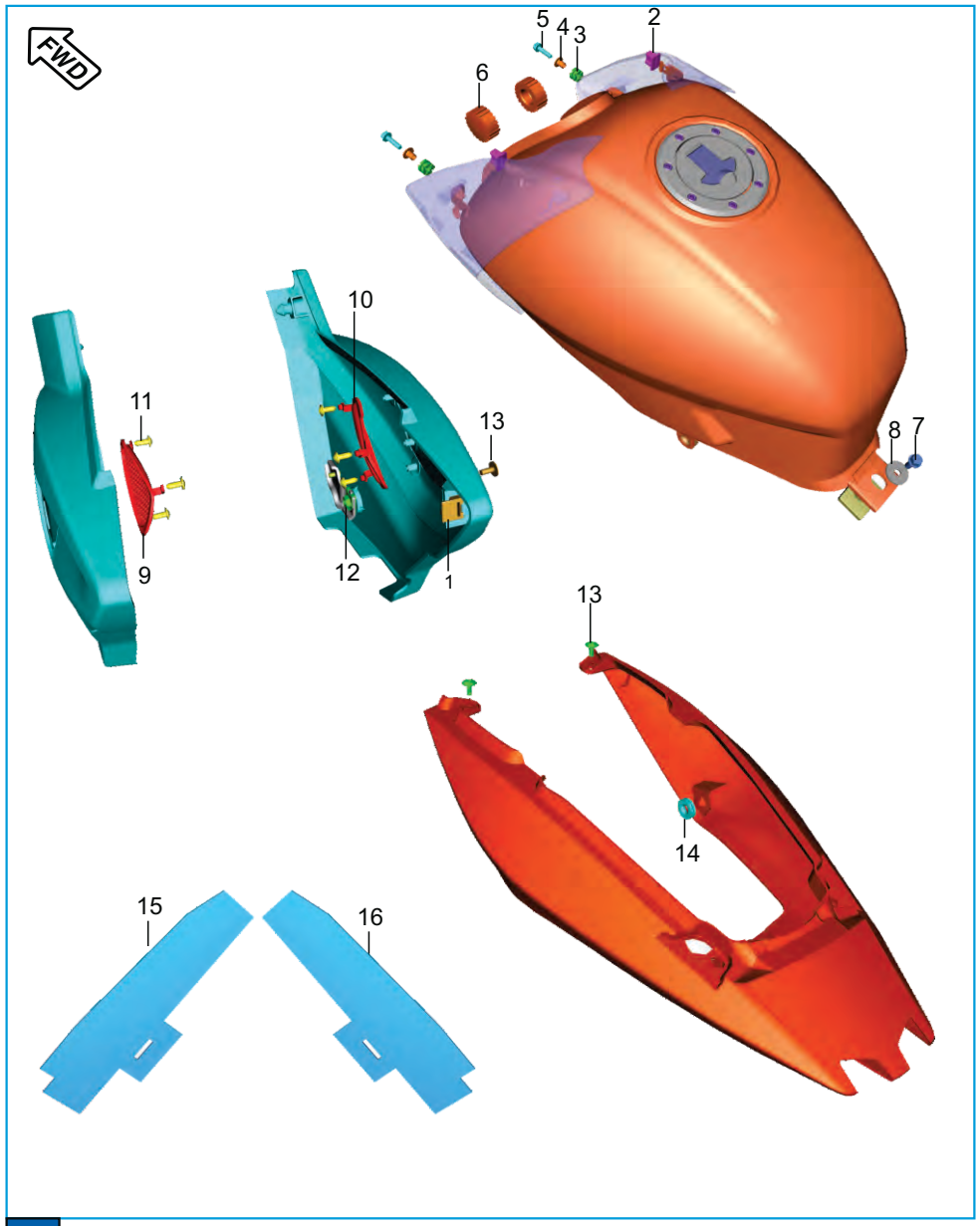

FWD Front Wheel Direction

Plate No.: 41

Fittings P. Tank, Side Cover & Cover Seat

No.	Part No.	Description	Qty/Veh.	Remarks
1	DH 1611 33	Grommet Side Cover Rear	2	
2	JC 1410 17	Grommet II	2	
3	JC 1410 15	Grommet	2	
4	JC 1410 16	Collar	2	
5	39 1902 04	Flanged Bolt	2	
6	DJ 1410 08	Damper Front	2	
7	39 1556 04	Flange Bolt	1	
8	39 2424 11	Plain Washer	1	
9	DK 1611 23	Cover Side Mesh LH	1	
10	DK 1611 24	Cover Side Mesh RH	1	
11	59 0200 01	Self Tap Screw	6	
12	DJ 1810 65	Clip Nut	2	
13	DG 1611 21	Screw	3	
14	DH 1611 58	Grommet Side Cover RR	1	
15	DK 1611 71	Rubber Flap LH for Seat Cowl	1	
16	DK 1611 72	Rubber Flap RH for Seat Cowl	1	

Plate No.: 42

Seat Assembly / Seat Lock

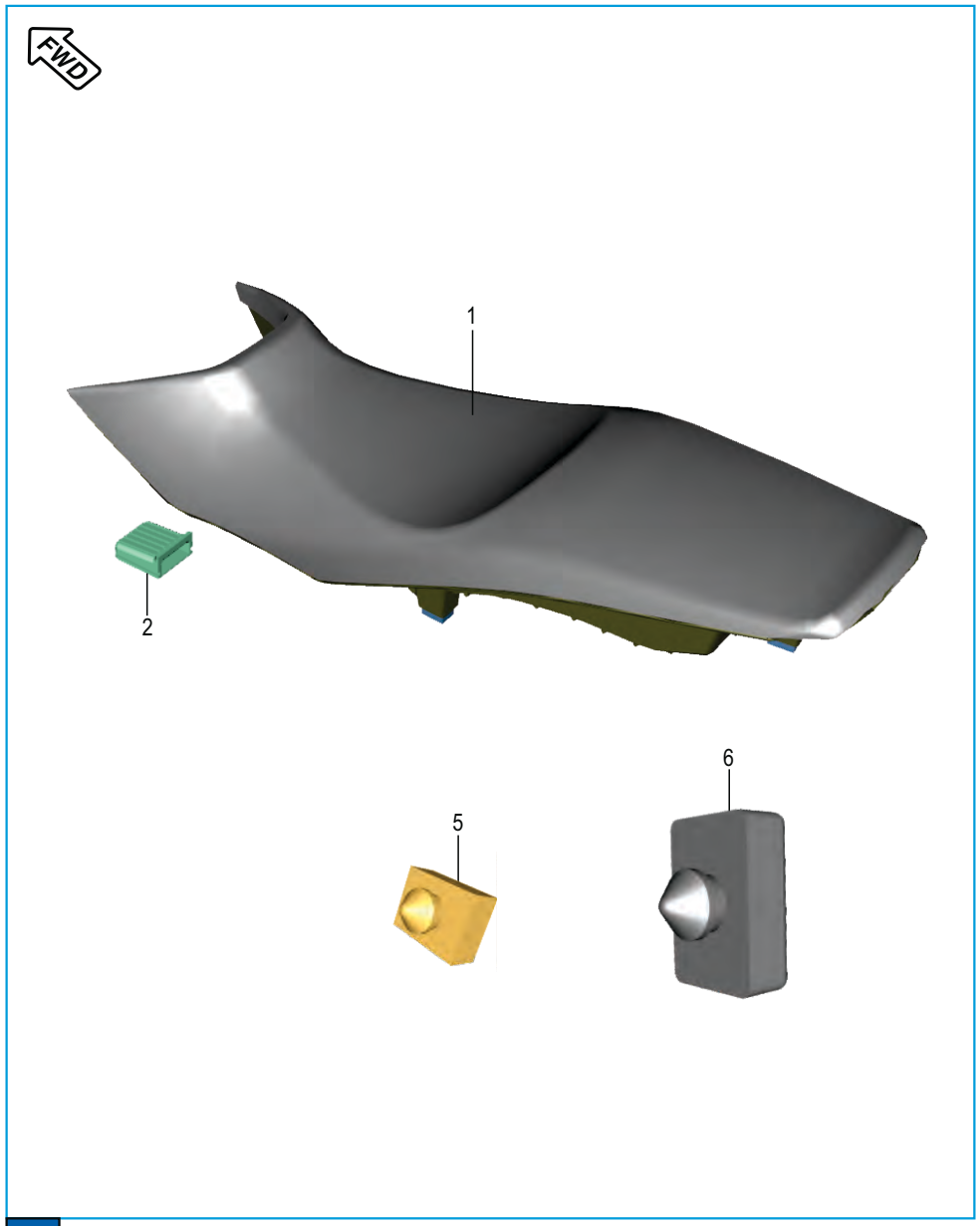

No.	Part No.	Description	Qty/Veh.	Remarks
1	DH 2110 12	Seat Assly	1	
2	DK 2110 07	Damper Kit	1	
3	DJ 2110 06	Lock Assly Seat	1	N.I.
4	39 1902 04	Flanged Bolt	2	N.I
5	DS 2110 05	Damper - Seat	6	
6	DJ 2110 07	Damper For Seat	3	

FWD Front Wheel Direction

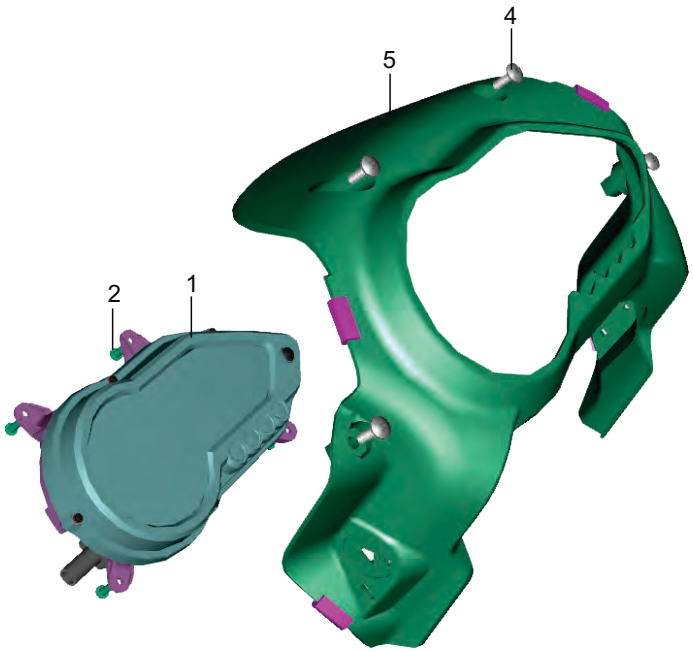

Front Wheel Direction

Plate No.: 43

Meter Assembly

No.	Part No.	Description	Qty/Veh.	Remarks
1	DH 1910 66	Speedometer Assly	1	
2	39 1778 02	Self Tapping Screw	4	
3	DJ 2011 37	Dust Cover Electronic Cluster	1	N.I.
4	39 1907 01	Mushroom Head Screw	4	
5	DJ 1811 19	Speedo Meter Cover	1	
6	DJ 2011 59	Speedo Meter Top Cover	1	N.I.
7	YD H190 02	Top Cover With Sealing Ring	1	N.I.



Front Wheel Direction

Plate No.: 44

Control Cables

No.	Part No.	Description	Qty/Veh.	Remarks
1	DJ 1910 61	Cable Accelerator	1	
2	DH 2010 79	Speedo Sensor With Cable 'O' Ring	1	
3	DJ 1910 15	Cable Clutch	1	
4	59 2100 19	'O' Ring	1	

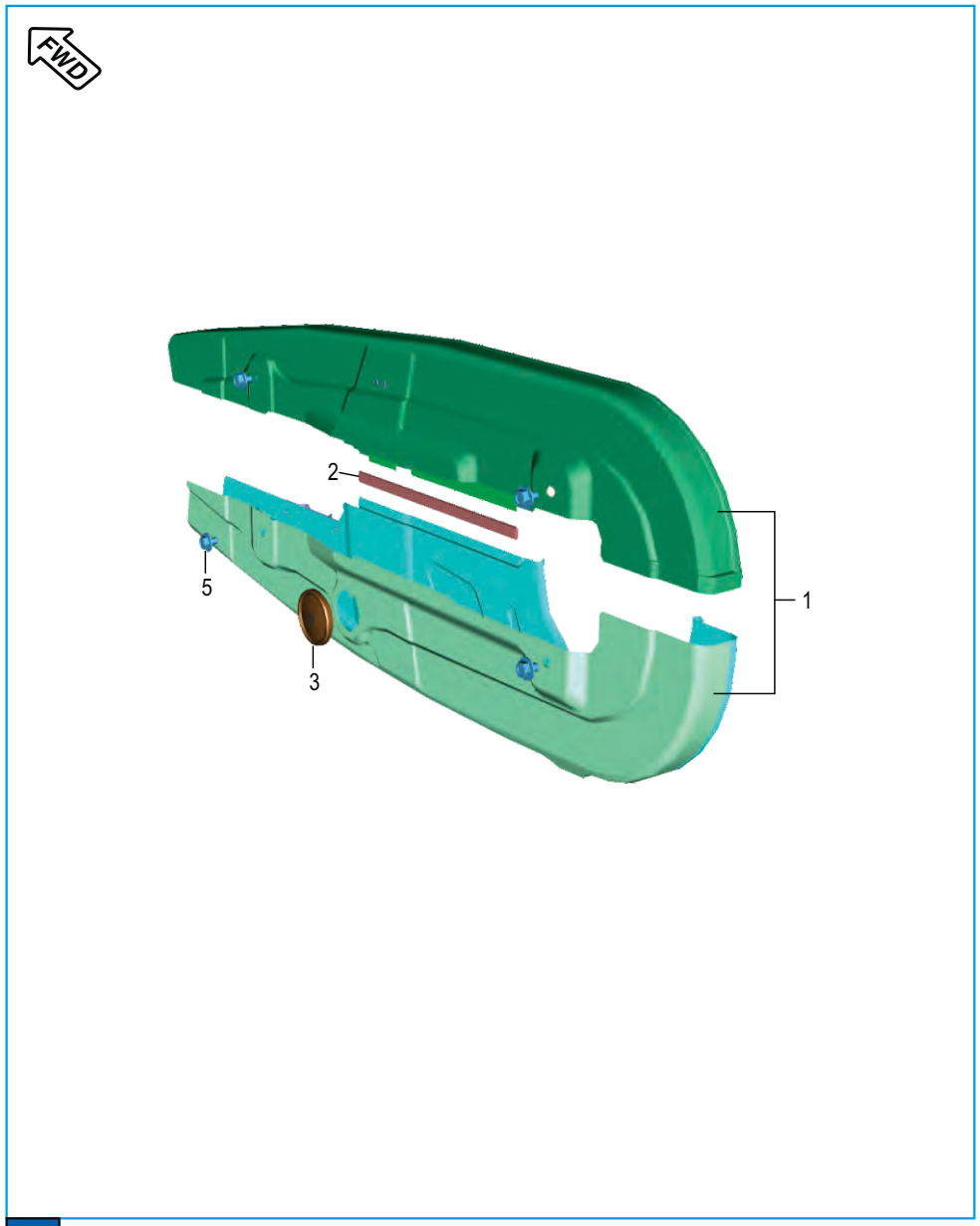

Front Wheel Direction

Plate No.: 45

Chain Case

No.	Part No.	Description	Qty/Veh.	Remarks
1	52 DJ01 66	Case Chain Kit	1	
2	DH 1612 84	Rubber Beading	1	
3	15 1610 69	Rubber Cap	1	
4	DJ 1612 27	Instruction Label	1	
5	DH 1612 83	Bolt	4	

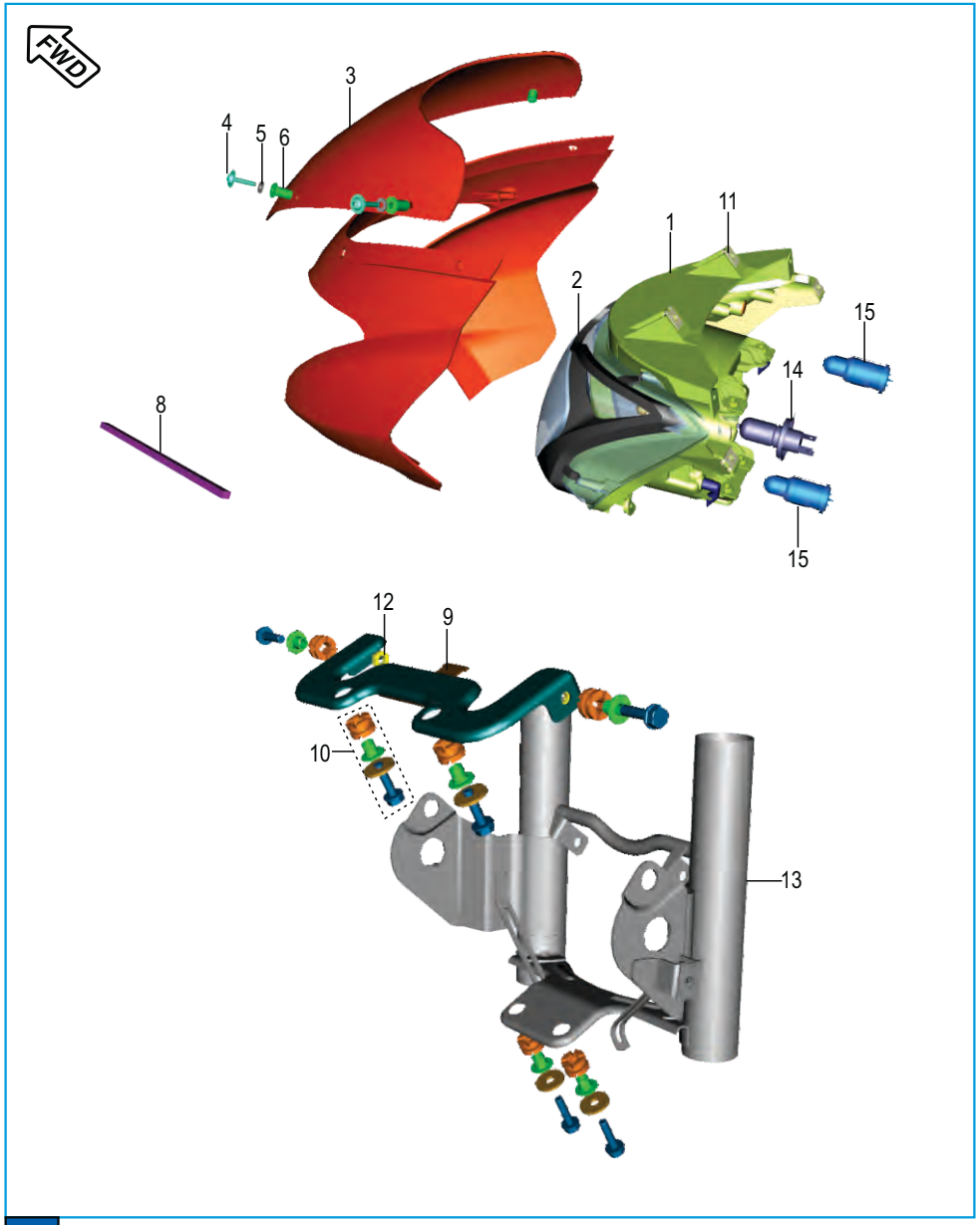

FWD Front Wheel Direction

Plate No.: 46

Head Lamp & Fairing

No.	Part No.	Description	Qty/Veh.	Remarks
1	JC 2010 51	Head Lamp Assly.	1	
2	DJ 1811 20	Head Lamp Mask	1	
3	DJ 1810 33	Wind Shield	1	
4	DF 1810 98	Bolt M-5	4	
5	39 2141 24	Non Metallic Washer	4	
6	DL 1810 10	Well Nut	4	
7	DJ 1810 37	Decal Wind Shield	1	N.I
8	DJ 1810 69	Packing Fairing	1	
9	DH 1810 52	Fairing Mounting Upper Bracket	1	
10	36 DH40 20	Kit Hardware Mtg. Bracket	1	
11	DJ 1612 29	Clip Nut	4	
12	KC BA06 05	Nut Hex Thin	2	
13	DH 1810 92	Lamp Shade Assembly	1	
14	CL 2010 23	Lamp 12V 35/35W-HS1	1	
15	DJ 2010 72	Lamp Position 12V/ / 5W	2	
16	YD H130 01	Head Lamp Wiring Horniest	1	N.I.

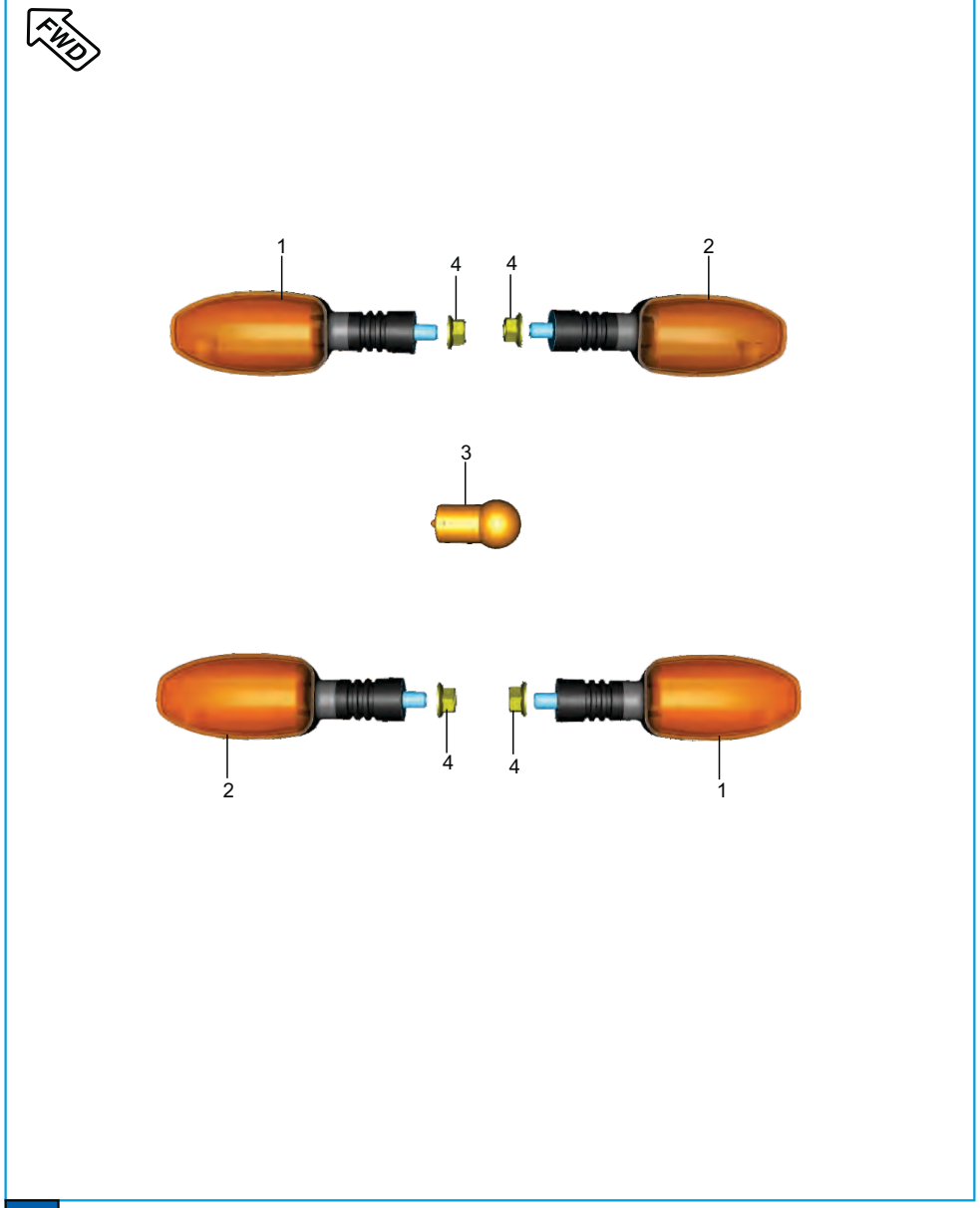

Plate No.: 47

Indicator Light Assembly

No.	Part No.	Description	Qty/Veh.	Remarks
1	DJ 2012 07	Blinker Front LH / RR RH	1	
2	DJ 2012 06	Blinker Front RH / RR LH	1	
3	GH 2010 12	Lamp 12V / 10W	4	
4	39 1225 15	Hex Nut Flange	4	

FWD Front Wheel Direction

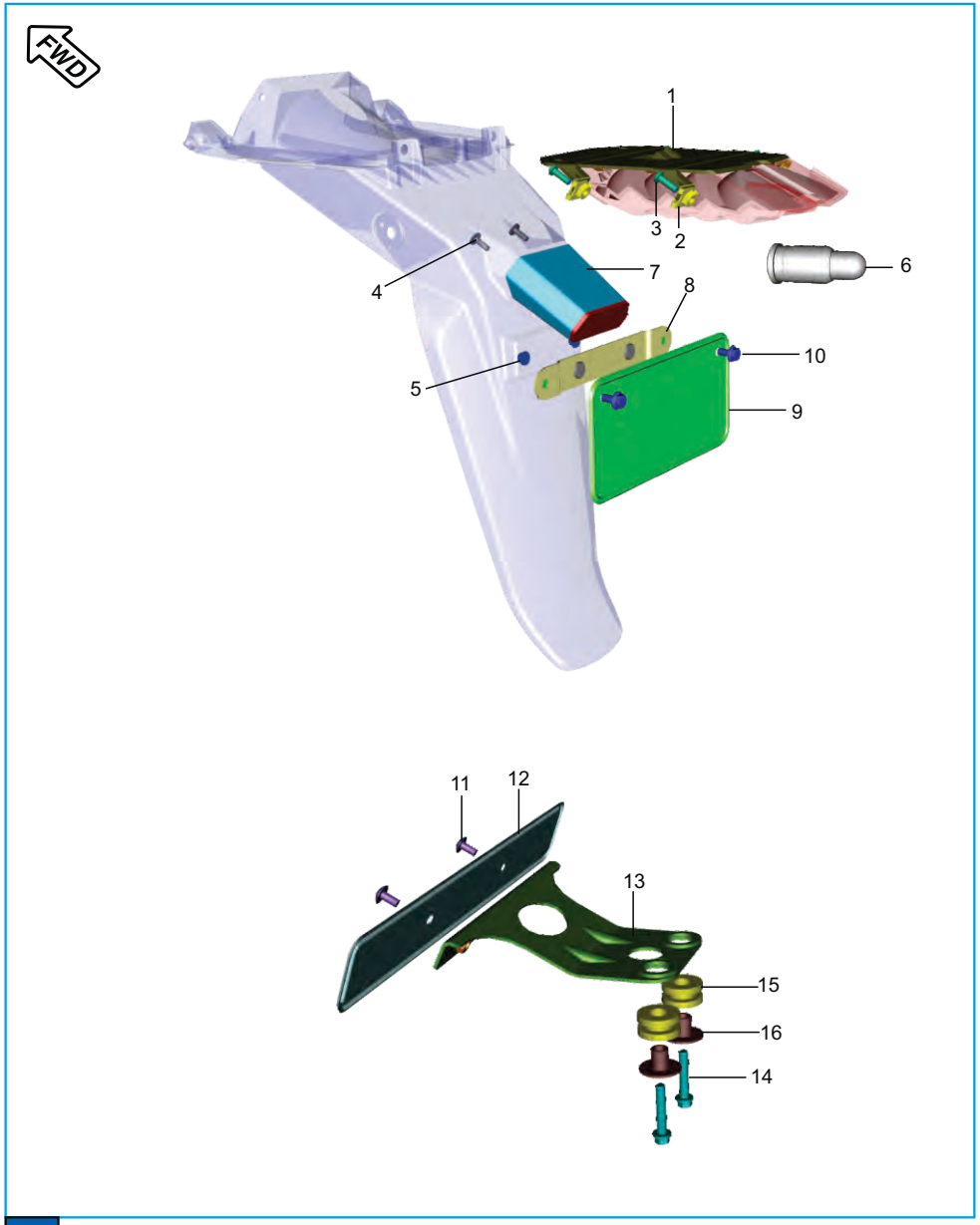

Front Wheel Direction

Plate No.: 48

Tail Lamp Assly / FR & RR No. Plate

No.	Part No.	Description	Qty/Veh.	Remarks
1	DK 2010 03	LED Tail Lamp Assly	1	
2	DK 1611 53	Clip Nut	4	
3	39 2592 01	Screw Pan Cross	4	
4	39 1907 01	Truss Screw	2	
5	39 1972 15	Bolt Flange	2	
6	DJ 2010 72	Lamp 12V-4W	1	
7	JW 4010 11	No. Plate Illumination	1	
8	DJ 1610 72	Rear No. Plate Bkt.	1	
9	DP 1611 45	Number Plate Rear	1	
10	39 1680 04	Hex Flanged Bolt	2	
11	39 1783 01	Truss Screw	2	For Front No. Plate
12	DP 1611 44	Number Plate Front	1	
13	DH 1615 54	No. Plate Mounting Bracket	1	
14	39 1074 04	Bolt Flange	2	
15	DH 1612 93	Grommet For Number Plate Mtg	2	
16	30 2110 05	Collar	2	



Plate No.: 49

Tool Kit

No.	Part No.	Description	Qty/Veh.	Remarks
1	DJ 2210 19	Tool Kit	1	
2	DH 2110 05	Band Tool Kit	2	

FWD Front Wheel Direction

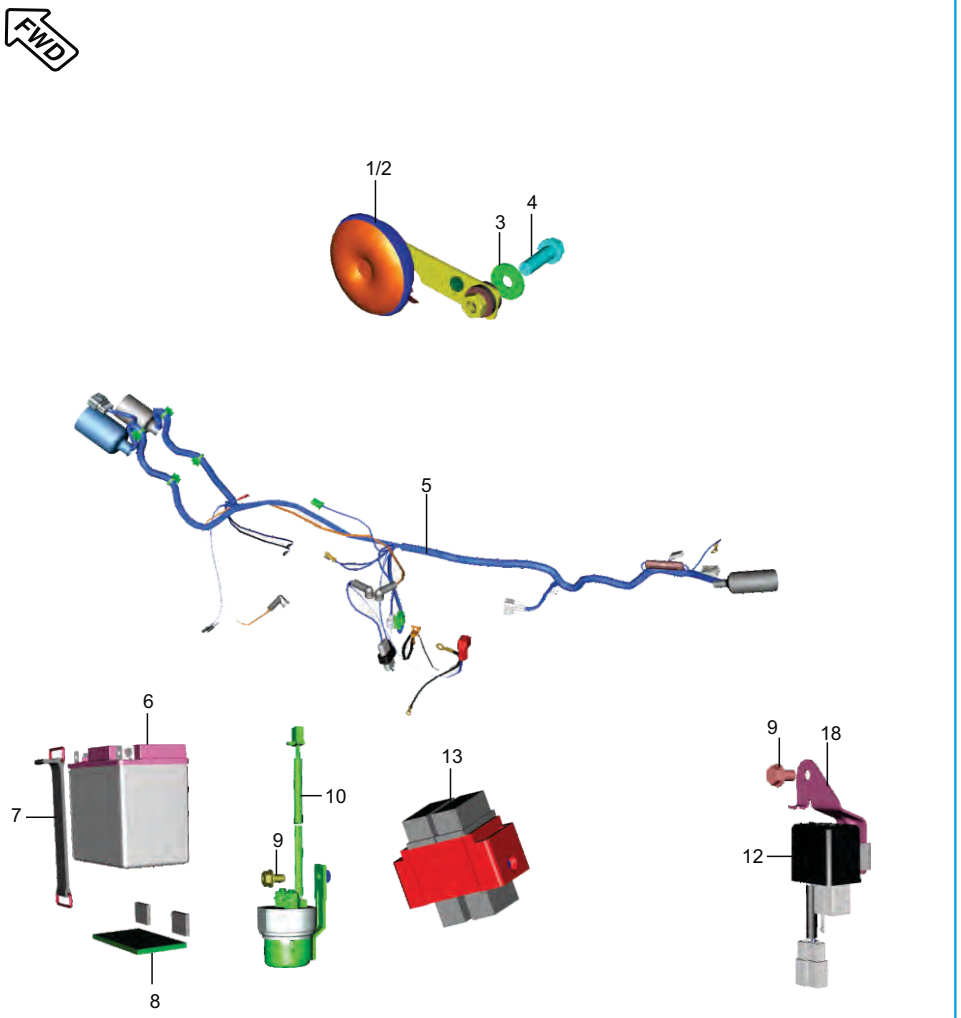

Plate No.: 50

Electrical Equipments

No.	Part No.	Description	Qty/Veh.	Remarks
1	DH 2010 76	Horn	1	
2	DH 2010 77	Horn	1	
3	39 1507 11	Plain Washer	1	
4	39 1956 04	Flange Bolt	1	
5	DH 2011 07	Wiring Harness	1	Ref.Cir. IB 293
6	JF 4018 07	Battery 12V 7Ah Dry	1	
7	DH 1613 68	Band Battery Bkt.	1	
8	JG 4018 08	Foam Battery Bracket	3	
9	39 1944 04	Flange Bolt	2	
10	DK 2010 78	Starter Relay	1	
11	DJ 2011 40	Cable Assly. (Battery To Earth)	1	N.I
12	JL 4020 04	Light Control Module	1	
13	30 2011 04	Fuse Box Assly.	1	
14	AK 2010 12	Fuse - 10a (blade Type)	2	N.I
15	AP 2010 25	Fuse 15a (blade Type)	2	N.I
16	DJ 2011 40	Cable Assly. (Battery To St. Relay)	1	N.I
17	60 1114 20	Cable Tie Lock	4	N.I
18	DH 1614 85	Bkt LCM Mtg	1	

FWD Front Wheel Direction

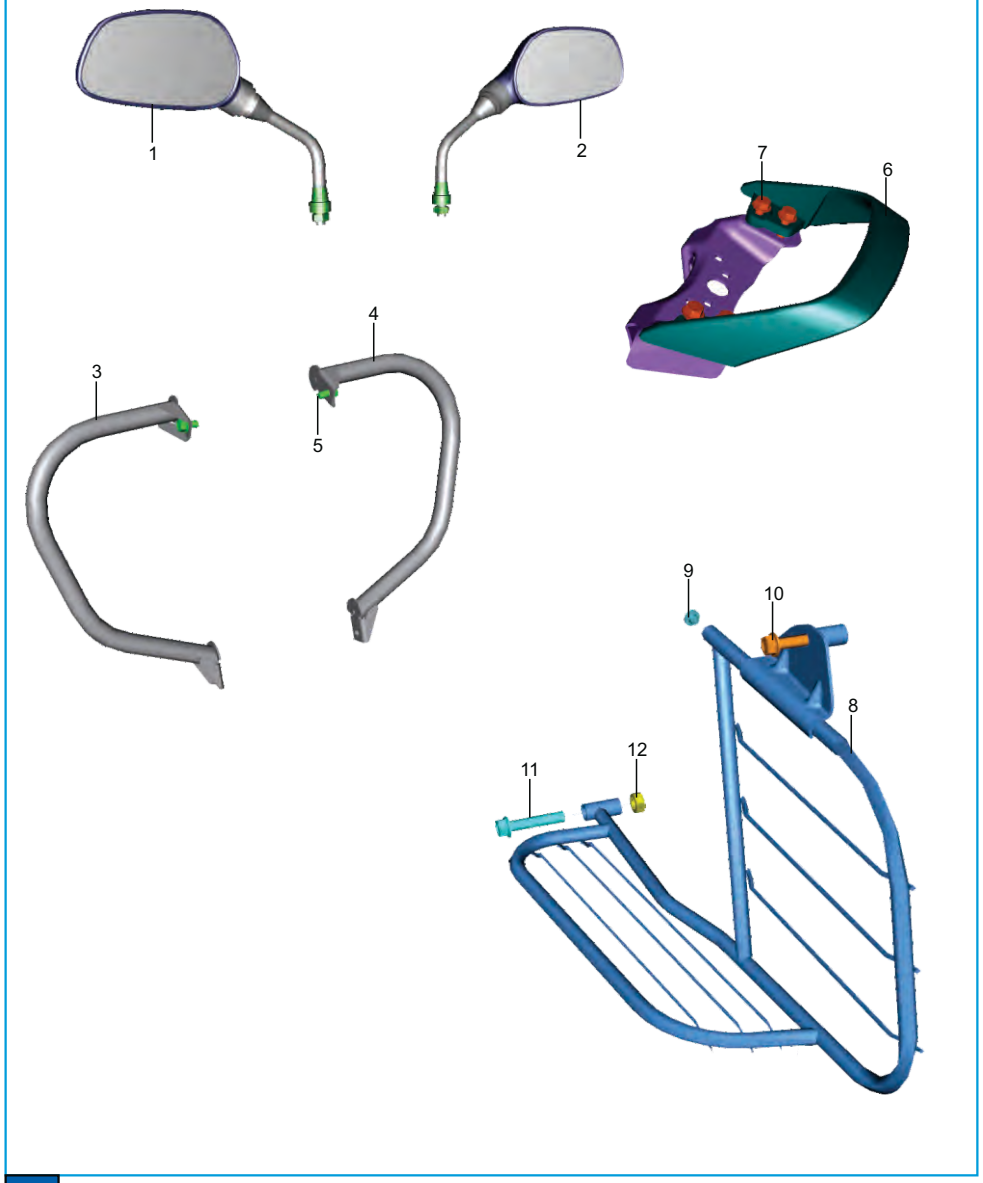

FWD Front Wheel Direction

Plate No.: 51

Accessories / Grab Handle

No.	Part No.	Description	Qty/Veh.	Remarks
1	DJ 2210 03	Mirror Assembly - LH	1	
2	DJ 2210 04	Mirror Assembly - RH	1	
3	DH 2210 12	Leg Guard LH	1	
4	DH 2210 13	Leg Guard RH	1	
5	KA DA08 14	Bolt Flanged	2	
6	52 DH09 28	Grab Handle Wt Tpt Washer&Bolt	1	
7	39 1681 04	Bolt Flange	4	
8	DH 1615 09	Guard Lady Footrest	1	
9	DS 2210 01	Plug	1	
10	KA DA08 45	Bolt Flanged	1	
11	39 1608 04	Bolt Flanged M10	1	
12	39 0296 15	Hex Nut	1	

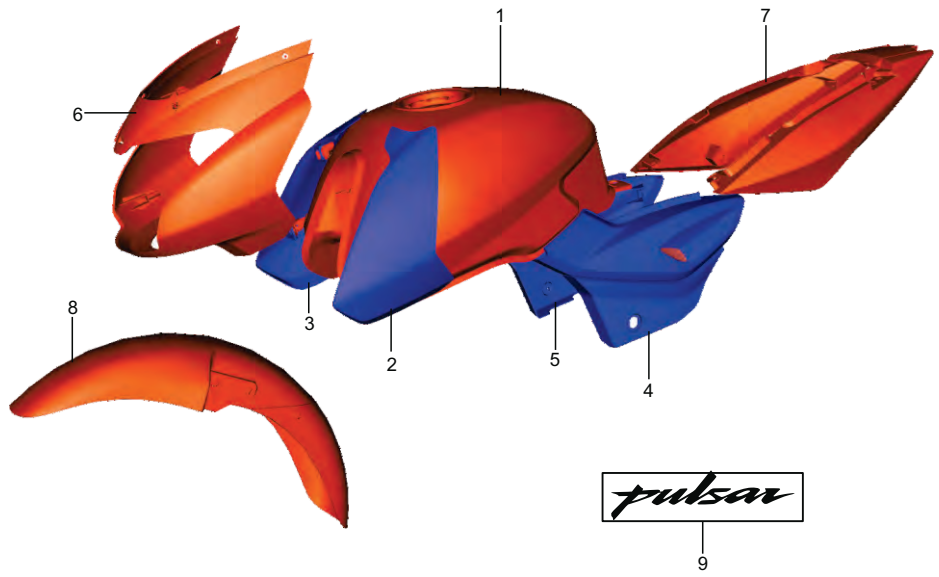

FWD Front Wheel Direction

Plate No.: 52

Painted Parts

No.	Part No.	Description	Qty.	Remarks
1	52 DH13 63	FUEL TANK WITH DKL FL RED	1	EVAP
1	52 DH13 20	TANK WITH DECAL EB BLACK	1	EVAP
1	52 DH13 21	FUEL TANK ROYAL BLUE WT BLUE DCL	1	EVAP
1	52 DH16 69	FUEL TANK WH DECAL C.WINE RED	1	EVAP Ref. Cir IB : 289
1	52 DH16 59	FUEL TANK WITH DCL SAFFIRE BLUE	1	EVAP Ref. Cir. IB :289
1	52 DH15 21	FUEL TANK WH DCL KHI EBY.BLK	1	EVAP
1	52 DH15 96	FUEL TANK W DKL KHI PASS RED	1	EVAP
1	52 DH15 22	FUEL TANK ROYAL BLUE WT BLUE-SILVER DCL	1	EVAP
1	52 DH17 25	FUEL TANK WH DKL KHI EB.BLACK	1	Ref. Cir IB : 306
1A	52 DH13 75	FUEL TANK WITH DECAL FL RED	1	NON EVAP
1A	52 DH13 55	FUEL TANK WITH DECAL EB BLACK	1	NON EVAP
1A	52 DH13 61	FUEL TANK ROYAL BLUE WT BLUE DCL	1	NON EVAP
1A	52 DH16 87	FUEL TANK WITH DECAL C. WINE RED	1	NON EVAP Ref. Cir IB : 289
1A	52 DH16 86	FUEL TANK WITH DECAL SAFFIRE BLUE	1	NON EVAP Ref. Cir IB : 289
1A	52 DH16 28	FUEL TANK WITH DECAL KHI EB.BLACK	1	NON EVAP
1A	52 DH16 30	FUEL TANK WITH DECAL KHI PAS. RED	1	NON EVAP
1A	52 DH16 29	FUEL TANK ROYAL BLUE WT BLUE-SILVER DCL	1	NON EVAP
2	52 DH13 64	TANK FLAP LH WITH DCL FL RED	1	
2	52 DH08 79	TANK FLAP LH WITH DCL EB BLACK	1	
2	52 DH13 23	TANK FLAP LH ROYAL BLUE WT BLUE DCL	1	
2	52 DH16 67	TANK FLAP LH WH DKL C.WINE RED	1	Ref. Cir IB : 289
2	52 DH16 57	TANK FLAP LH WH DKL SAFFIRE BLUE	1	Ref. Cir IB : 289
2	52 DH15 23	TANK FLAP LH ASLY DL KH.EB. BLK	1	
2	52 DH15 97	TNK FLP LH W DKL KHI PASS RED	1	
2	52 DH15 24	TANK FLAP LH ROYAL BLUE WT BLUE-SILVER DCL	1	
2	52 DH17 23	TANK FLAP LH ASLY WH DKL KHI EB.BLK	1	Ref. Cir IB : 306
3	52 DH13 65	TANK FLAP RH WITH DCL FL RED	1	
3	52 DH08 80	TANK FLAP WITH DCL RH BLACK	1	
3	52 DH13 25	TANK FLAP RH ROYAL BLUE WT BLUE DCL	1	
3	52 DH16 68	TANK FLAP RH WH DKL C.WINE RED	1	Ref. Cir IB : 289
3	52 DH16 58	TANK FLAP RH WH DKL SAFFIRE BLUE	1	Ref. Cir IB : 289
3	52 DH15 25	TANK.FLAP.RH ASLY.DCL KH.EB.BL	1	
3	52 DH15 98	TNK FLP RH W DKL KHI PASS RED	1	
3	52 DH15 26	TANK FLAP RH ROYAL BLUE WT BLUE-SILVER DCL	1	
3	52 DH17 24	TANK FLAP RH ASLY WH DKL KHI EB.BLK	1	Ref. Cir IB : 306

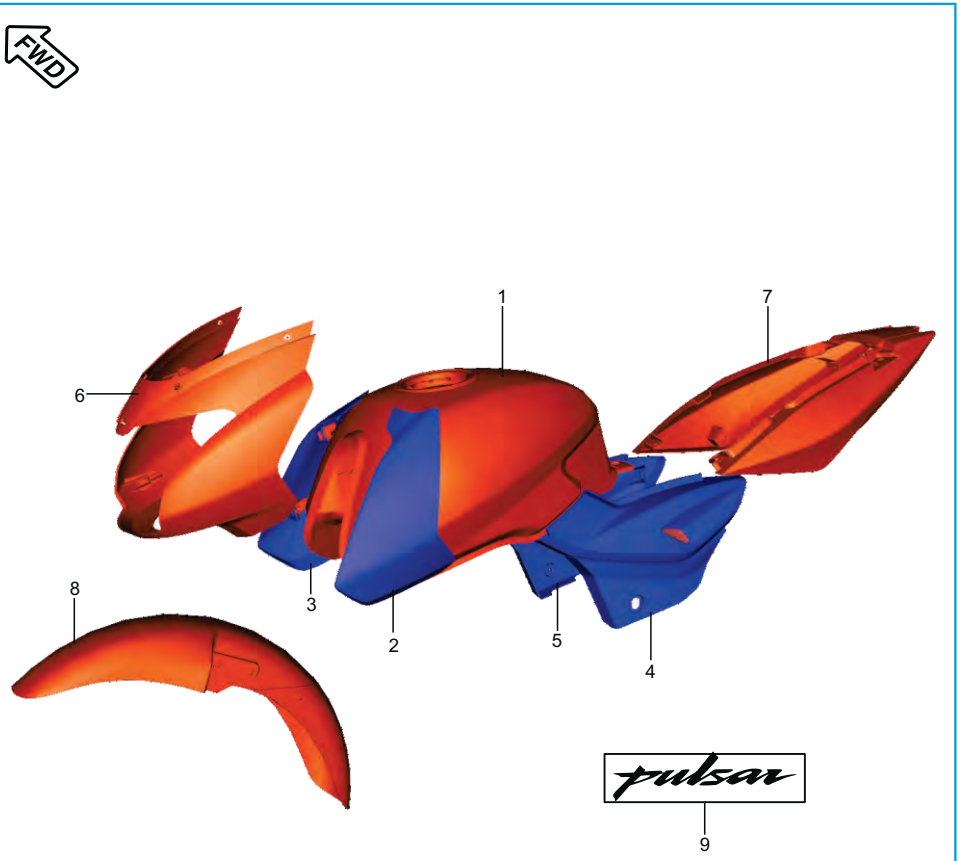

Plate No.: 52

Painted Parts

No.	Part No.	Description	Qty.	Remarks
4	52 DH13 68	SIDE COVER LH WITH DCL FL RED	1	
4	52 DJ09 51	SIDE COVER LH WITH DCL EB BLACK	1	
4	52 DJ09 56	SIDE COVER LH ROYAL BLUE WT BLUE DCL	1	
4	52 DH16 60	SD CVR LH WH DCL C.WINE RED	1	Ref. Cir IB : 289
4	52 DH16 50	SD CVR LH WH DCL SAFFIRE BLU	1	Ref. Cir IB : 289
4	52 DH15 27	SI.CVR LH ASLY DCL KH.EB.BL	1	
4	52 DH15 99	SD CVR LH ASY DKL KHI PAS RD	1	
4	52 DH15 28	SIDE COVER LH ROYAL BLUE WT BLUE-SILVER DCL	1	
4	52 DH17 15	SD CVR LH ASY WH DKL MATTE PWTR GRY	1	Ref. Cir IB : 306
5	52 DH13 69	SIDE COVER RH WITH DCL FL RED	1	
5	52 DJ09 52	SIDE COVER RH WITH DCL EB BLACK	1	
5	52 DJ09 57	SIDE COVER RH ROYAL BLUE WT BLUE DCL	1	
5	52 DH16 61	SD CVR RH WH DKL C.WINE RED	1	Ref. Cir IB : 289
5	52 DH16 51	SD CVR RH WH DKL SAFFIRE BLU	1	Ref. Cir IB : 289
5	52 DH15 29	SI.CVR RH WH DCL KHI EB.BLK	1	
5	52 DH16 00	SD CVR RH ASY DKL KHI PAS RD	1	
5	52 DH15 30	SIDE COVER RH ROYAL BLUE WT BLUE-SILVER DCL	1	
5	52 DH17 16	SD CVR RH ASY WH DKL MATTE PWTR GRY	1	Ref. Cir IB : 306
6	52 DH13 70	FAIRING WITH DCL FL RED	1	
6	52 DH13 35	FAIRING WITH DCL EB BLACK	1	
6	52 DH13 36	FAIRING ROYAL BLUE WT BLUE DCL	1	
6	52 DH16 62	FAIRING WITH C.WINE RED DECAL	1	Ref. Cir IB : 289
6	52 DH16 52	FAIRING WITH SAFFIRE BLUE DECAL	1	Ref. Cir IB : 289
6	52 DH15 31	FAIRING WITH KHI EB.BLK DCL	1	
6	52 DH16 01	FAIRING WH KHI PASS RED DKL	1	
6	52 DH15 32	FAIRING ROYAL BLUE WT BLUE-SILVER DCL	1	
6	52 DH17 17	FAIRING WITH KHI EBONY BLACK DECAL	1	Ref. Cir IB : 306
7	52 DH13 66	SEAT COWL WITH DCL FL RED	1	
7	52 DH13 57	SEAT COWL WITH DCL EB BLACK	1	
7	52 DH13 58	SEAT COWL ROYAL BLUE WT BLUE DCL	1	
7	52 DH15 35	SEAT COWL WITH DCL KHI EB.BLK	1	
7	52 DH16 03	SEAT COWL W DKL KHI PASS RED	1	
7	52 DH15 36	SEAT COWL ROYAL BLUE WT BLUE-SILVER DCL	1	
7	52 DH16 64	SEAT COWL WITH DCL C.WINE RED	1	Ref. Cir IB : 289
7	52 Dh16 54	SEAT COWL WITH DCL SAFFIRE BLUE	1	Ref. Cir IB : 289
7	52 DH17 19	SEAT COWL WH DECAL KHI EBONY BLK	1	Ref. Cir IB : 306

FWD Front Wheel Direction

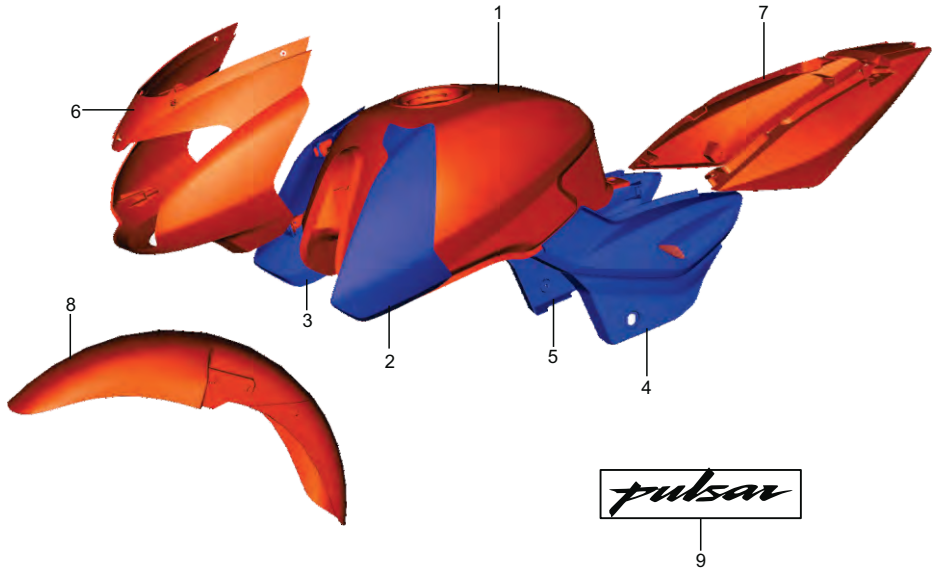

Plate No.: 52

Painted Parts

No.	Part No.	Description	Qty.	Remarks
8	56 DH05 3F	FENDER FRONT FL RED	1	
8	56 DH05 7T	FENDER FRONT EB BLACK	1	
8	56 DH05 7Q	FENDER FRONT ROYAL BLUE	1	
8	56 DH05 2V	FRONT FENDOR WINE RED	1	Ref. Cir IB : 289
8	56 DH05 5N	FRONT FENDOR SAFFIRE BLUE	1	Ref. Cir IB : 289
8	56 DH05 4R	FR. FENDER P150 BSIV KHI PASS RE	1	
8	52 DH17 21	FR. FENDER WH DKL KHI EBONY BLACK	1	Ref. Cir IB : 306
9	DJ 1614 16	Dcl 3D Pulsar	2	

FWD Front Wheel Direction

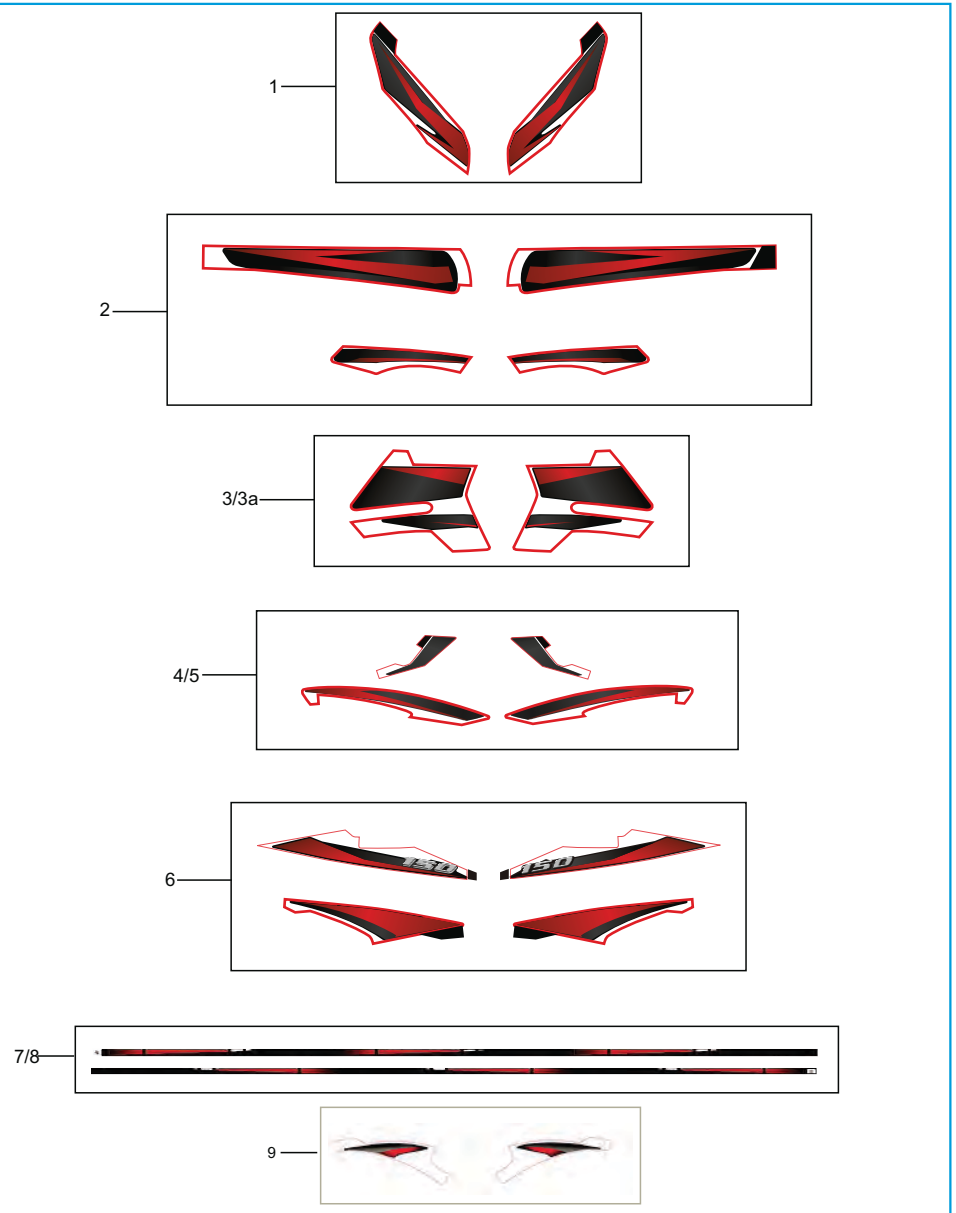

FWD Front Wheel Direction

Plate No.: 53

Decals Sets

No.	Part No.	Description	Qty.	Remarks
1	36 DJ40 63	KIT FAIRING DCL RED (E BLACK)	1	
1	36 DJ40 69	KIT FAIRING DCL ROYAL BLUE(BLUE DCL)	1	
1	36 DH41 06	KIT DCL FAIRING FL RED	1	
1	36 DH41 35	KIT FAIRING DECAL C W RED	1	Ref. Cir IB : 289
1	36 DH41 31	KIT FAIRING DECAL SAFFIRE BLUE	1	Ref. Cir IB : 289
1	36 DJ40 75	KIT DCL FAIRING EBONY BLACK	1	
1	36 DJ41 25	KIT DCL FAIRING PASSION RED	1	
1	36 DJ40 78	KIT FAIRING DCL ROYAL BLUE(BLUE-SILVER DCL)	1	
1	36 DH41 43	KIT FAIRING DECAL	1	Ref. Cir IB : 306
2	36 DJ40 64	KIT TANK DECAL RED (E BLACK)	1	
2	36 DJ40 68	KIT TANK DCL ROYAL BLUE(BLUE DCL)	1	
2	36 DH41 12	KIT DCL TANK F RED	1	
2	36 DH41 41	KIT TANK DECAL WINE RED	1	Ref. Cir IB : 289
2	36 DH41 32	KIT TANK DECAL SAFFIRE BLUE	1	Ref. Cir IB : 289
2	36 DJ40 76	KIT DCL TANK EBONY BLACK	1	
2	36 DH41 26	KIT DCL TANK PASSION RED	1	
2	36 DJ40 79	KIT TANK DCL ROYAL BLUE(BLUE-SILVER DCL)	1	
2	36 DH41 44	KIT TANK DECAL	1	Ref. Cir IB : 306
3	DH 1614 58	DCL TANK SPOILER UPPER BLACK LH	1	
3	DH 0101 31	DCL FLAP TANK UPPER LH BLUE	1	
3	DH 0101 55	DCL FLAP TANK UPPER LH RED	1	
3	DH 0101 85	DCL TANK SPOILER LH BLK-SILVER	1	
3	DH 0102 19	DCL SPOILER TANK LH RED-SILVER	1	
3	DH 0102 01	DCL TANK SPOILER LH BLUE-SILVR	1	
3	DH 0102 59	DECAL SPOILER TANK LH WINE RED	1	Ref. Cir IB : 289
3	DH 0102 40	DECAL SPOILER TANK LH S BLUE	1	Ref. Cir IB : 289
3	DH 0103 06	DECAL SPOILER TANK LH E BLACK	1	Ref. Cir IB : 306
3A	DH 1614 59	DCL TANK SPOILER UPPER BLACK RH	1	
3A	DH 0101 30	DCL FLAP TANK UPPER RH BLUE	1	
3A	DH 0101 56	DCL FLAP TANK UPPER RH RED	1	
3A	DH 0101 86	DCL TANK SPOILER RH BLK-SILVER	1	
3A	DH 0102 20	DCL SPOILER TANK RH RED-SILVER	1	
3A	DH 0102 02	DCL TANK SPOILER RH BLUE-SILVR	1	
3A	DH 0102 60	DECAL SPOILER TANK RH WINE RED	1	Ref. Cir IB : 289
3A	DH 0102 41	DECAL SPOILER TANK RH S BLUE	1	Ref. Cir IB : 289
3A	DH 0103 07	DECAL SPOILER TANK RH E BLACK	1	Ref. Cir IB : 306

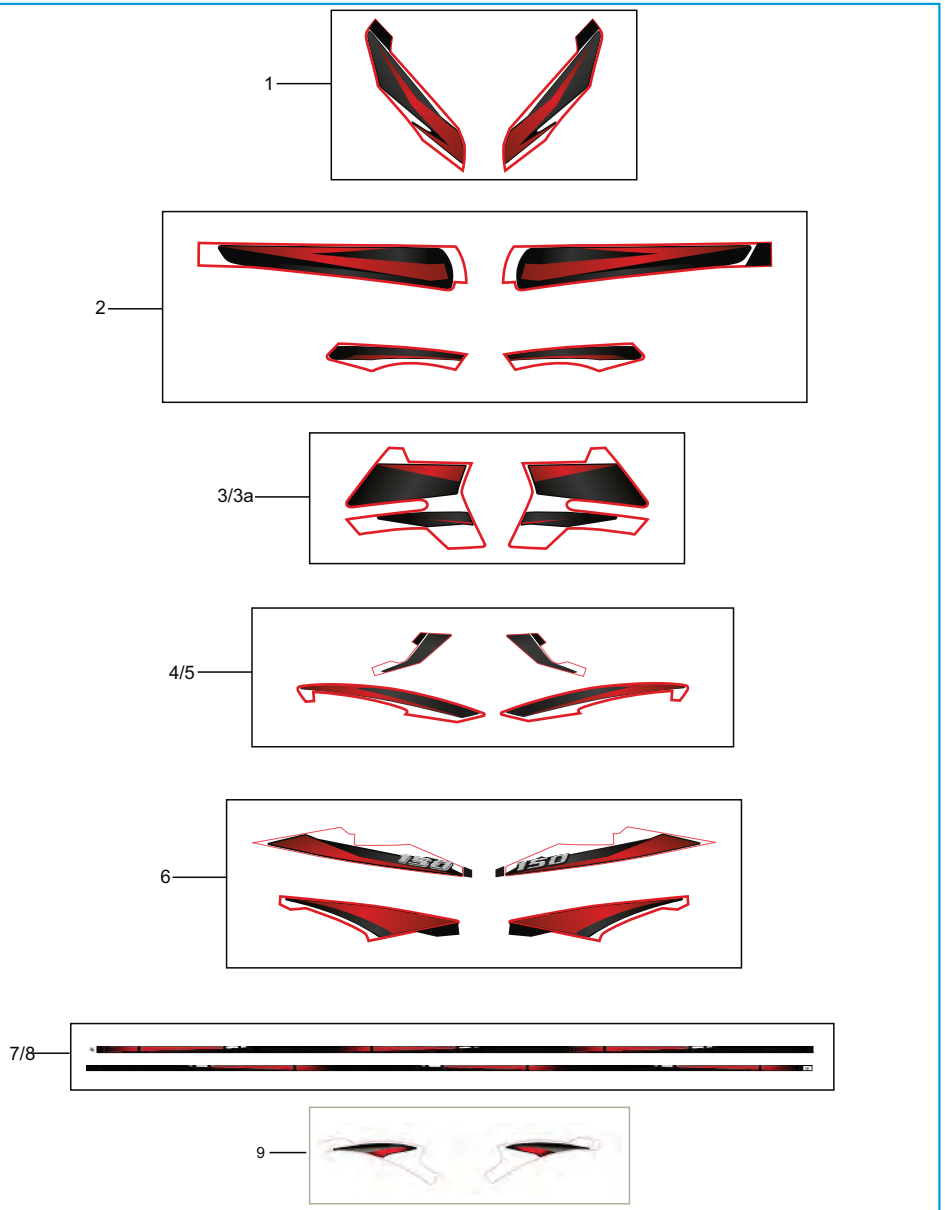

FWD Front Wheel Direction

Plate No.: 53

Decals Sets

No.	Part No.	Description	Qty.	Remarks
4	36 DJ40 65	KIT LH SIDE CVR DCL RED(E BLACK)	1	
4	36 DK01 25	KIT LH SIDE CVR DCL ROYAL BLUE(BLUE DCL)	1	
4	36 DH41 09	KIT DCL S COVER LH F RED	1	
4	36 DH41 37	KIT SIDE COVER LH WINE RED	1	Ref. Cir IB : 289
4	36 DH41 33	KIT SIDE COVER LH S BLUE	1	Ref. Cir IB : 289
4	36 DK01 37	KIT DCL SIDE COVER LH EBONY BLACK	1	
4	36 DH41 28	KIT DCL SIDE COVER LH PASSION RED	1	
4	36 DK01 39	KIT LH SIDE CVR DCL ROYAL BLUE(BLUE-SILVER DCL)	1	
4	36 DK01 52	KIT SIDE COVER DCL LH	1	Ref. Cir IB : 306
5	36 DJ40 66	KIT RH SIDE CVR DCL RED(E BLACK)	1	
5	36 DK01 26	KIT RH SIDE CVR DCL ROYAL BLUE(BLUE DCL)	1	
5	36 DH41 10	KIT DCL S CVR RH F RED	1	
5	36 DH41 38	KIT SIDE COVER RH WINE RED	1	Ref. Cir IB : 289
5	36 DH41 34	KIT SIDE COVER RH S BLUE	1	Ref. Cir IB : 289
5	36 DK01 38	KIT DCL SIDE CVR RH EBONY BLACK	1	
5	36 DH41 29	KIT DCL SIDE CVR RH PASSION RED	1	
5	36 DK01 40	KIT RH SIDE CVR DCL ROYAL BLUE(BLUE-SILVER DCL)	1	
5	36 DK01 53	KIT SIDE COVER DCL RH	1	Ref. Cir IB : 306
6	36 DH41 04	KIT SEAT COWL DCL E BLACK	1	
6	36 DH41 05	KIT SEAT COWL ROYAL BLUE(BLUE DCL)	1	
6	36 DH41 11	KIT DCL SEAT COWL F RED	1	
6	36 DH41 40	KIT SEAT COWL DECL WINE RED	1	Ref. Cir IB : 289
6	36 DH41 39	KIT SEAT COWL DECL S BLUE	1	Ref. Cir IB : 289
6	36 DH41 22	KIT DCL SEAT COWL EBONY BLACK	1	
6	36 DH41 27	KIT DCL SEAT COWL PASSION RED	1	
6	36 DH41 23	KIT SEAT COWL ROYAL BLUE(BLUE-SILVER DCL)	1	
6	36 DH41 45	KIT SEAT COWL DECAL	1	Ref. Cir IB : 306
7	DH 0101 20	DCL WHEEL LH-BLACK RED	2	
7	DH 0101 42	DCL WHEEL LH-BLUE	2	
7	DH 0101 67	DCL WHEEL LH FL RED	2	
7	DH 0102 09	DCL WHEEL LH SILVER	1	
8	DH 0101 21	DCL WHEEL RH-BLACK RED	2	
8	DH 0101 43	DCL WHEEL RH-BLUE	2	
8	DH 0101 68	DCL WHEEL RH FL RED	2	
8	DH 0102 10	DECAL WHEEL RH SILVER	1	

Kit List

Sr No	Kit Part No.	Kit Description	Consisting of Following Parts		
			Part No.	Description	Qty/Kit
1	36DS1001	Cyl.Head O Ring Kit	39239121	O Ring (Cover tappet)	2
			39128321	O ring	2
2	36DS1002	Valve Kit	DS101023	Valve Intake	1
			DS101024	Valve Exhaust	1
3	36DK0005	Valve Repair Kit	DS101083	Retainer valve spring	2
			DH101731	Spring valve inner	2
			DH101730	Spring valve outer	2
			DH101026	Seat valve spring	2
4	36DH4030	Guide Chain Kit	DH101923	Guide chain (Tight)	1
			DK101059	Guide Chain (slack)	1
5	36DH4116	Set primary drive & driven	DH101628	Gear primary drive	1
			DH102206	Clutch Housing com.	1
6	36DH4019	Kit centrifugal oil filter	39220011	Washer	1
			DH101234	Gasket centrifugal oil filter	1
			DH101640	Screw	1
			DH101066	Join oil dealivery	1
			DH101067	Spring oil delivery	1
			39219908	Pin oil delivery joint	1
7	36DH1008	Boss Kick Set	DH101185	Spring Kick Starter Arm	1
			DH101068	Ball steel	1
			DH101547	Base kick lever	1
			DH101548	Hex. bolt with flange	1
			DH101320	Bolt	1
8	36DH4011	Kit hardware shield	DH101301	Seal shield muflar	2
			DH101395	Trust screw	2
			DH101481	Grommet shield	1

Kit List

Sr No	Kit Part No.	Kit Description	Consisting of Following Parts		
			Part No.	Description	Qty/Kit
9	36DK0009	Kit hardware silencer	39185004	Flange bolt	1
			39242511	Plain washer	1
			DD161071	U nut	1
			DH161155	Damper silencer	1
			DH161157	Tube silencer mounting	1
10	36DK0013	Kit hardware pillion	DJ161186	Plait side pillion stape	2
			DH161061	Pin pillion set	2
			30141031	O ring	2
			39104011	Plain washer	2
			39078408	Split pin	2
11	36DH4013	Chain sprocket kit	DH151056	Sprocket (43 teeth)	1
			DJ151096	Chain	1
			DH101117	Sprocket Drive	1
12	36DK0016	Kit hardware bracket pedal	39212104	Flange bolt	1
			DH191013	Sprocket brake shifter assly	1
			39153721	O ring	1
			DH191023	Dust cap	1
13	36DH4015	Kit hardware rod torque	39078912	Spring washer	2
			3079415	Nut lock	2
			39080708	Pin snap	2
			39154011	Plain washer	1
14	36DK0020	Kit outer tube	DJ181089	Seal dust	2
			DJ181088	Ring snap	2
			DS181072	Guide bush washer	2
			DS181070	Guide bush	2
15	52DJ0166	Chin case kit	DJ161230	Case chain upper assly	1
			DJ161231	Case chain lower assly	1

Kit List

Sr No	Kit Part No.	Kit Description	Consisting of Following Parts		
			Part No.	Description	Qty/Kit
16	36DH4115	Fork Cyl. Complete P150 BS IV	DH181126	Pipe Seat	1
			30181020	PISTON RING	1
			JH121049	Cap Oil Lock	1
			DM181008	Rebound Spring	1
17	36DH4116	Kit Primary Drive & Driven Gear	DH101628	Gear Primary Drive	1
			DH102206	Outer Complete Clutch	1
18	36DH4102	Piston Ring Set	PD521210	Ring Piston Top	1
			PD521211	Ring Piston Second	1
			PD521212	Ring Piston Oil	1
19	36DH4103	Cyl. Block Piston K1 BS IV	PD521200	Piston Assembly	1
			DH102223	Cylinder Block K1 56 Bore	1
20	36DH4099	Kit Assembly C'Case LH	DH102164	Crankcase LH	1
			39253105	Stud - M10	1
			DH101203	Breather Pipe	1
21	36DH4120	Kit Steel Clutch Plate K1BSIV	PD551433	Clutch Plate	4
22	36DH4112	KIT DCL TANK F RED	DH010151	Decal Tank Upper LH Red	1
			DH010152	Decal Tank Upper RH Red	1
			DH010153	Decal Tank Lower LH Red	1
			DH010154	Decal Tank Lower RH Red	1
23	36DH4111	Kit Dcl Seat Cover F Red	DH010163	Decal Seat Cowl Lower LH Red	1
			DH010164	Decal Seat Cowl Lower RH Red	1
			DH010165	Decal Seat Cowl Upper LH Red	1
			DH010166	Decal Seat Cowl Upper RH Red	1
24	36DH4109	Kit Dcl S Cover Lh F Red	DH010161	Decal Side Cover Lower LH Red	1
			DH010159	Decal Side Cover Upper LH Red	1
25	36DH4110	Kit Dcl S Cover Rh F Red	DH010162	Decal Side Cover Lower RH Red	1
			DH010160	Decal Side Cover Upper RH Red	1

Kit List

Sr No	Kit Part No.	Kit Description	Consisting of Following Parts		
			Part No.	Description	Qty/Kit
26	36DH4106	Kit Dcl Fairing Fl Red	DH010149	Decal Fairing LH Red	1
			DH010150	Decal Fairing RH Red	1
27	36DJ4064	Tank Dcl Red(e Black)	DH010106	Decal Tank Lower Black LH	1
			DH010107	Decal Tank Lower Black RH	1
			DH010104	Decal Tank Upper Black LH	1
			DH010105	Decal Tank Upper Black RH	1
28	36DH4104	Kit Seat Cowl Dcl Black	DH010116	Decal Cowl Seat Lower Black LH	1
			DH010117	Decal Cowl Seat Lower Black RH	1
			DH010118	Decal Cowl Seat Upper Black LH	1
			DH010119	Decal Cowl Seat Upper Black RH	1
29	36DJ4065	LH SIDE C DCL RED	DH010112	Decal Cover Side Upper Black LH	1
			DH010114	Decal Cover Side Lower Black LH	1
30	36DJ4066	Rh Side C Dcl Red	DH010113	Decal Cover Side Upper Black RH	1
			DH010115	Decal Cover Side Lower Black RH	1
31	36DJ4063	Kit Fairing Decal Red	DH010102	Decal Fairing Black LH	1
			DH010103	Decal Fairing Black RH	1
32	36DJ4068	Kit Tank Dcl R Blue K2	DH010126	Decal Tank Upper LH Blue	1
			DH010127	Decal Tank Upper RH Blue	1
			DH010128	Decal Tank Lower LH Blue	1
			DH010129	Decal Tank Lower RH Blue	1
33	36DH4105	Kit Seat Cowl Dcl Blue	DH010138	Decal Seat Cowl Lower LH Blue	1
			DH010139	Decal Seat Cowl Lower RH Blue	1
			DH010140	Decal Seat Cowl Upper LH Blue	1
			DH010141	Decal Seat Cowl Upper RH Blue	1

Kit List

Sr No	Kit Part No.	Kit Description	Consisting of Following Parts		
			Part No.	Description	Qty/Kit
34	36DH4113	Kit Dcl Lh Side Cvr R Blue	DH010134	Decal Side Cover Upper LH Blue	1
			DH010136	Decal Side Cover Lower LH Blue	1
35	36DH4114	Kit Dcl Rh Side Cvr R Blue	DH010135	Decal Side Cover Upper RH Blue	1
			DH010137	Decal Side Cover Lower RH Blue	1
36	36DJ4069	Kit Fairing Decal Royal Blue	DH010124	Decal Fairing LH Blue	1
			DH010125	Decal Fairing RH Blue	1
37	36DJ4078	Kit Decal Fairing Royal Blue	Dh010194	Decal Fairing Rh Blue-silver	1
			Dh010193	Decal Fairing Lh Blue-silver	1
38	36DJ4076	Kit Decal Tank Ebony Black	DH010184	Decal Tank Lower Rh Black-silver	1
			DH010182	Decal Tank Middle Rh Blk-silver	1
			DH010183	Decal Tank Lower Lh Black-silver	1
			DH010180	Decal Tank Upper Rh Black-silver	1
			DH010181	Decal Tank Middle Lh Blk-silver	1
			DH010179	Decal Tank Upper Lh Black-silver	1
39	36DH4126	Kit Decal Tank Passion Red	DH010218	Decal Tank Lower Rh Red-silver	1
			DH010216	Decal Tank Middle Rh Red-silver	1
			DH010217	Decal Tank Lower Lh Red-silver	1
			DH010214	Decal Tank Upper Rh Red-silver	1
			DH010215	Decal Tank Middle Lh Red-silver	1
			DH010213	Decal Tank Upper Lh Red-silver	1
40	36DJ4079	Kit Decal Tank Royal Blue	DH010200	Decal Tank Lower Rh Blue-silver	1
			DH010198	Decal Tank Middle Rh Blue-silver	1
			DH010199	Decal Tank Lower Lh Blue-silver	1
			DH010196	Decal Tank Upper Rh Blue-silver	1
			DH010197	Decal Tank Middle Lh Blue-silver	1
			DH010195	Decal Tank Upper Lh Blue-silver	1
41	36DK0137	Kit Dcl Side Cvr Lh Ebony Black	DH010187	Decal Cover Side Lh Black-silver	1
			DH010112	Decal Cover Side Upper Black Lh	1
42	36DH4128	Kit Decal Side Cover Lh P Red	DH010227	Decal Cover Side Upper Lh Red	1
			DH010221	Decal Cover Side Lwr Lh Red-slvr	1

Kit List

Sr No	Kit Part No.	Kit Description	Consisting of Following Parts		
			Part No.	Description	Qty/Kit
43	36DK0139	Kit Dcl Side Cvr Lh R Blue	DH010203	Decal Cover Side Lh Blue-silver	1
			DH010134	Decal Side Cover Upper Lh Blue	1
44	36DK0138	Kit Dcl Side Cvr Rh E Black	DH010188	Decal Cover Side Rh Black-silver	1
			DH010113	Decal Cover Side Upper Black Rh	1
43	36DH4129	Kit Dcl Side Cvr Rh P Red	DH010228	Decal Cover Side Upper Rh Red	1
			DH010222	Decal Cover Side Lwr Rh Red-slvr	1
44	36DK0140	Kit Dcl Side Cvr Rh R Blue	DH010135	Decal Side Cover Upper Rh Blue	1
			DH010204	Decal Cover Side Rh Blue-silver	1
45	36DH4122	Kit Decal Seat Cowl E Black	DH010192	Decal Cowl Seat Lwr Rh Blk-silvr	1
			DH010190	Decal Cowl Seat Upr Rh Blk-silvr	1
			DH010191	Decal Cowl Seat Lwr Lh Blk-silvr	1
			DH010189	Decal Cowl Seat Upr Lh Blk-silvr	1
46	36DH4127	Kit Decal Seat Cowl P Red	DH010226	Decal Cowl Seat Lwr Rh Red-slvr	1
			DH010224	Decal Cowl Seat Upr Rh Red-slvr	1
			DH010225	Decal Cowl Seat Lwr Lh Red-slvr	1
			DH010223	Decal Cowl Seat Upr Lh Red-slvr	1
47	36DH4123	Kit Decal Seat Cowl Blue	DH010208	Decal Cowl Seat Lr Rh Blue-silvr	1
			DH010206	Decal Cowl Seat Ur Rh Blue-silvr	1
			DH010207	Decal Cowl Seat Lr Lh Blue-silvr	1
			DH010205	Decal Cowl Seat Ur Lh Blue-silvr	1
48	36DK0152	KIT SIDE COVER DCL LH	DH010310	Decal Cover Side Lwr Lh E Black	1
			DH010308	Decal Cover Side Upr Lh E Black	1
49	36DK0153	KIT SIDE COVER DCL RH	DH010311	Decal Cover Side Lwr Rh E Black	1
			DH010309	Decal Cover Side Upr Rh E Black	1
50	36DH4145	KIT SEAT COWL DECAL	Dh010315	DCL Cowl Seat Lower Rh E Black	1
			Dh010313	DCL Cowl Seat Upper Rh E Black	1
			Dh010314	DCL Cowl Seat Lower Lh E Black	1
			Dh010312	DCL Cowl Seat Upper Lh E Black	1

SPC Updation Details

Page no.	Fig. no.	Old part no.	New part no.	Description	Updation date	Remarks
18	15	DH101336	39216611	Washer Special	05.07.17	ALTERNATE
18	24	AA1014373	39106204	Bolt Flanged Small	05.07.17	ALTERNATE
20	3	DK101146	DH101146	Shift Gear Shift Fork	05.07.17	ALTERNATE
26	4	DJ101704	DH102200	Guide Starter Gear	05.07.17	ALTERNATE
32	5	36DH4120	PD551433	Plate Clutch	05.07.17	ALTERNATE
38	14	DJ121049	DJ121059	Set Plunger Assembly	05.07.17	ALTERNATE
40	6	DH102231	DH102232	Breather Pipe Clip Assly	05.07.17	ALTERNATE
54	18	DH171024	39029215	Hexagon Nut	05.07.17	ALTERNATE
66	15	DH101647	DH101540	Bolt Socket Head	05.07.17	ALTERNATE
68	4	DE191011	DK151069	Banjo Bolt	05.07.17	ALTERNATE
78	24	DH181023	30181009	Bearing Cone	05.07.17	ALTERNATE
78	25	DH181121	DJ181041	Holder Fork Under	05.07.17	ALTERNATE
80	11	39275821	DK141028	O Ring	05.07.17	ALTERNATE
100	13	JL402207	30201104	Fuse Box Assly.	05.07.17	ALTERNATE
102	6	DH221015	DJ161263	Grab Handle	05.07.17	ALTERNATE
106	4	36DH4113	36DK0125	Kit LH Side Cvr Dcl Royal Blue	02.08.17	ALTERNATE
106	5	36DH4114	36DK0126	Kit RH Side Cvr Dcl Royal Blue	02.08.17	ALTERNATE
18	15	39216611	39215911	Washer Special	02.08.17	ALTERNATE
32	5	36DH4120	PD551433	Plate Clutch	02.08.17	ALTERNATE
50	12	39265804	39241204	Hex Bolt	02.09.17	ALTERNATE
30	2	52DH1352	52DH1412	Assly Cvr LH RR Slate Grey	04.09.17	ALTERNATE
106	5	---	52DH1651	Sd Cvr Rh Wh Dkl Saffire Blu	15.09.17	Ref. Cir IB 289
106	6	---	52DH1662	Fairing With C.wine Red Dcl	15.09.17	Ref. Cir IB 289
106	6	---	52DH1652	Fairing With Saffire Blue Dcl	15.09.17	Ref. Cir IB 289
106	7	---	52DH1664	Seat Cowl Wt Dcl C.wine Red	15.09.17	Ref. Cir IB 289
106	7	---	52DH1654	Seat Cowl Wt Dcl Saffire Blue	15.09.17	Ref. Cir IB 289
108	8	---	56DH052V	Front Fendor Wine Red	15.09.17	Ref. Cir IB 289
108	8	---	56DH055N	Front Fendor Saffire Blue	15.09.17	Ref. Cir IB 289
110	1	---	36DH4135	Kit Fairing Decal C W Red	15.09.17	Ref. Cir IB 289
110	1	---	36DH4131	Kit Fairing Decal Saffire Blue	15.09.17	Ref. Cir IB 289
110	2	---	36DH4141	Kit Tank Decal Wine Red	15.09.17	Ref. Cir IB 289
110	2	---	36DH4132	Kit Tank Decal Saffire Blue	15.09.17	Ref. Cir IB 289
110	3	---	DH010259	Dcl Spoiler Tank Lh Wine Red	15.09.17	Ref. Cir IB 289
110	3	---	DH010240	Dcl Spoiler Tank Lh S Blue	15.09.17	Ref. Cir IB 289
110	3a	---	DH010260	Dcl Spoiler Tank Rh Wine Red	15.09.17	Ref. Cir IB 289
110	3a	---	DH010241	Dcl Spoiler Tank Rh S Blue	15.09.17	Ref. Cir IB 289
112	4	---	36DH4137	Kit Side Cover Lh Wine Red	15.09.17	Ref. Cir IB 289
112	4	---	36DH4133	Kit Side Cover Lh S Blue	15.09.17	Ref. Cir IB 289
112	5	---	36DH4138	Kit Side Cover Rh Wine Red	15.09.17	Ref. Cir IB 289
112	5	---	36DH4134	Kit Side Cover Rh S Blue	15.09.17	Ref. Cir IB 289
112	6	---	36DH4140	Kit Seat Cowl Decl Wine Red	15.09.17	Ref. Cir IB 289
112	6	---	36DH4139	Kit Seat Cowl Decl S Blue	15.09.17	Ref. Cir IB 289
46	13	Dk101770	56DJ4E1Y	Cover Starter Motor (MLT Silver)	25.09.17	Correction
50	13	---	39241304	Bolt - Hexagon Head With Flange	28.09.17	Additional
50	14	---	39241204	Bolt - Hexagon Head With Flange	28.09.17	Additional
50	15	---	39241404	Bolt - Hexagon Socket Head Cap	28.09.17	Additional
102	6	DJ161263	52DH0928	Grab Handle Wt Tpt Washer & Bolt	28.09.17	Updation
12	10	---	Dk101503	Engine Temperature sensor	29.09.17	Ref. Cir. IB 293
12	11	---	DK101237	Washer for Engine Tem. Sensor	29.09.17	Ref. Cir. IB 293
26	1	36DH4099	36DH4130	Crankcase LH	29.09.17	Ref. Cir. IB 293
28	9	DS101353	39107504	Bolt	29.09.17	Ref. Cir. IB 293
38	1	---	DH121209	Carburetor Assly.	29.09.17	Ref. Cir. IB 293
38	8	36DH4118	36DH4142	Jet Kit	29.09.17	Ref. Cir. IB 293
38	13	DH121169	36DH4136	Pilot Screw Kit	29.09.17	Ref. Cir. IB 293

SPC Updation Details

Page no.	Fig. no.	Old part no.	New part no.	Description	Updation date	Remarks
100	5	DH201105	DH201107	Wiring Harness	29.09.17	Ref. Cir. IB 293
44	9	DJ111098	DH111117	CDI Assly.	07.12.17	Updation
24	1	---	DH102343	Engine Assembly	15.12.17	Ref.Cir. IB 293
44	9	---	DH111117	CDI Assly.	15.12.17	Ref.Cir. IB 293
42	2	---	DH102349	Shield Muffler	25.1.18	Ref. Cir IB: 306
42	8	---	DH102351	SHIELD WIRE	25.1.18	Ref. Cir IB: 306
42	10	---	DH102350	Shield Cat	25.1.18	Ref. Cir Ib: 306
64	2	---	56DH6d51	Wheel Fr Milky White	25.1.18	Ref. Cir Ib: 306
64	5	---	56DH6e51	Wheel Rr Milky White	25.1.18	Ref. Cir Ib: 306
104	1	---	52DH1725	Fuel Tank Wh Dkl Khi Eb.black	25.1.18	Ref. Cir Ib: 306
104	2	---	52DH1723	Tank Flap Lh Asly Wh Dkl Khi Eb.blk	25.1.18	Ref. Cir Ib: 306
104	3	---	52DH1724	Tank Flap Rh Asly Wh Dkl Khi Eb.blk	25.1.18	Ref. Cir Ib: 306
106	4	---	52DH1715	Sd Cvr Lh Asy Wh Dkl Matte Pwtr Gry	25.1.18	Ref. Cir Ib: 306
106	5	---	52DH1716	Sd Cvr Rh Asy Wh Dkl Matte Pwtr Gry	25.1.18	Ref. Cir Ib: 306
106	6	---	52DH1717	Fairing With Khi Ebony Black Decal	25.1.18	Ref. Cir Ib: 306
106	7	---	52DH1719	Seat Cowl Wh Decal Khi Ebony BlK	25.1.18	Ref. Cir Ib: 306
108	8	---	52DH1721	Fr. Fender Wh Dkl Khi Ebony BlK	25.1.18	Ref. Cir Ib: 306
110	1	---	36DH4143	Kit Fairing Decal	25.1.18	Ref. Cir Ib: 306
110	2	---	36DH4144	Kit Tank Decal	25.1.18	Ref. Cir Ib: 306
110	3	---	DH010306	Decal Spoiler Tank Lh E Black	25.1.18	Ref. Cir Ib: 306
110	3a	---	DH010307	Decal Spoiler Tank Rh E Black	25.1.18	Ref. Cir Ib: 306
112	4	---	36DK0152	Kit Side Cover Dcl Lh	25.1.18	Ref. Cir Ib: 306
112	5	---	36DK0153	Kit Side Cover Dcl Rh	25.1.18	Ref. Cir Ib: 306
112	6	---	36DH4145	Kit Seat Cowl Decal	25.1.18	Ref. Cir Ib: 306

Part No.	Figure No.	Page No.
15161069	3	90
22150451	5	56
30101061	20	18
30101142	18	28
30141031	7	56
30151033	12	66
30151069	16	72
30151075	13	72
30151082	3	72
30151095	8	74
30151118	4	66
30161157	2	62
30181009	24	78
30181026	6	78
30181029	14	78
30201104	13	100
30211005	16	96
31101173	4	14
31121006	9	12
31181099	15	78
31201079	11	74
33141008	2	4
33141008	5	80
39029215	18	54
39029615	12	102
39042215	10	62
39045411	14	54
39055302	13	54
39071111	7	60
39073817	10	36
39074011	9	80
39078408	9	56
39078708	3	62
39078912	26	78
39090012	5	66
39096315	4	56
39097204	10	46
39099311	13	36
39099906	10	28
39104011	8	56

Part No.	Figure No.	Page No.
39104119	3	28
39106204	24	18
39107404	14	96
39107504	9	2
39107504	9	28
39118011	26	76
39118415	17	76
39119704	6	20
39122515	4	94
39150711	3	100
39155604	7	82
39160804	11	102
39162011	9	16
39166005	1	6
39167204	3	16
39167304	12	10
39167404	11	16
39167404	22	28
39167404	2	34
39167704	16	26
39168004	6	52
39168004	10	96
39168104	7	102
39168606	8	16
39168606	4	34
39177802	2	86
39178001	11	38
39178301	11	96
39181304	27	78
39182912	4	54
39190204	5	82
39190204	4	84
39190701	4	86
39190701	4	96
39193120	6	14
39194304	8	60
39194304	19	76
39194404	10	44
39194404	9	100
39195604	4	100

Parts Index
BAJAJ pulsar DTS-i 150 BS IV

Part No.	Figure No.	Page No.
39197015	5	42
39197015	4	50
39197015	11	50
39197215	5	96
39201719	5	8
39214124	5	92
39215220	5	16
39215220	10	24
39215704	5	50
39215811	2	18
39215911	10	18
39215911	15	18
39216011	9	18
39216511	3	14
39218106	2	12
39218819	7	26
39218919	21	26
39219019	15	26
39219421	6	34
39220011	12	32
39220207	6	28
39220307	8	14
39227611	8	36
39231004	8	50
39231204	3	50
39234411	7	36
39236615	5	54
39241204	12	50
39241204	14	50
39241304	13	50
39241404	15	50
39242411	8	82
39242704	16	76
39244011	9	8
39244311	17	28
39253204	8	2
39255717	7	16
39258320	5	24
39258320	17	26
39259201	3	96

Part No.	Figure No.	Page No.
39260120	7	24
39260220	6	24
39260320	18	26
39260607	7	20
39260801	7	6
39264715	6	2
39266921	14	10
59020001	11	82
59040007	18	78
59040048	2	70
59050008	3	24
59050008	2	26
59100002	1	44
59150003	17	66
59200007	9	46
59200028	12	16
59200029	19	26
59210006	5	26
59210019	3	66
59210019	4	88
60111420	17	100
36DH1008	3	36
36DH1902	15	68
36DH4011	3	42
36DH4013	6	72
36DH4014	6	74
36DH4015	7	74
36DH4019	7	14
36DH4020	10	92
36DH4030	4	10
36DH4099	1	26
36DH4102	4	12
36DH4103	6	12
36DH4104	6	112
36DH4105	6	112
36DH4106	1	110
36DH4109	4	112
36DH4110	5	112
36DH4111	6	112
36DH4112	2	110

Part No.	Figure No.	Page No.
36DH4115	8	78
36DH4116	13	32
36DH4117	2	32
36DH4118	8	38
36DH4119	2	38
36DH4122	6	112
36DH4123	6	112
36DH4126	2	110
36DH4127	6	112
36DH4128	4	112
36DH4129	5	112
36DH4130	1	26
36DH4131	1	110
36DH4132	2	110
36DH4133	4	112
36DH4134	5	112
36DH4135	1	110
36DH4136	13	38
36DH4137	4	112
36DH4138	5	112
36DH4139	6	112
36DH4140	6	112
36DH4141	2	110
36DH4142	8	38
36DH4143	1	110
36DH4144	2	110
36DH4145	6	112
36DJ4063	1	110
36DJ4064	2	110
36DJ4065	4	112
36DJ4066	5	112
36DJ4068	2	110
36DJ4069	1	110
36DJ4075	1	110
36DJ4076	2	110
36DJ4078	1	110
36DJ4079	2	110
36DJ4125	1	110
36DK0005	6	8
36DK0009	6	42

Part No.	Figure No.	Page No.
36DK0013	6	58
36DK0016	3	74
36DK0020	2	78
36DK0076	1	46
36DK0125	4	112
36DK0126	5	112
36DK0137	4	112
36DK0138	5	112
36DK0139	4	112
36DK0140	5	112
36DK0152	4	112
36DK0153	5	112
36DS1001	3	2
36DS1001	8	6
36DS1002	7	8
36DS1802	4	52
36DU1901	11	76
52DH0169	1	34
52DH0177	10	16
52DH0879	2	104
52DH0880	3	104
52DH0928	6	102
52DH1317	1	30
52DH1318	1	28
52DH1320	1	104
52DH1321	1	104
52DH1323	2	104
52DH1325	3	104
52DH1335	6	106
52DH1336	6	106
52DH1355	1A	104
52DH1357	7	106
52DH1358	7	106
52DH1361	1A	104
52DH1363	1	104
52DH1364	2	104
52DH1365	3	104
52DH1366	7	106
52DH1368	4	106
52DH1369	5	106

Parts Index
BAJAJ pulsar DTS-i 150 BS IV

Part No.	Figure No.	Page No.
52DH1370	6	106
52DH1375	1A	104
52DH1412	4	30
52DH1521	1	104
52DH1522	1	104
52DH1523	2	104
52DH1524	2	104
52DH1525	3	104
52DH1526	3	104
52DH1527	4	106
52DH1528	4	106
52DH1529	5	106
52DH1530	5	106
52DH1531	6	106
52DH1532	6	106
52DH1535	7	106
52DH1536	7	106
52DH1596	1	104
52DH1597	2	104
52DH1598	3	104
52DH1599	4	106
52DH1600	5	106
52DH1601	6	106
52DH1603	7	106
52DH1628	1A	104
52DH1629	1A	104
52DH1630	1A	104
52DH1650	4	106
52DH1651	5	106
52DH1652	6	106
52Dh1654	7	106
52DH1657	2	104
52DH1658	3	104
52DH1659	1	104
52DH1660	4	106
52DH1661	5	106
52DH1662	6	106
52DH1664	7	106
52DH1667	2	104
52DH1668	3	104

Part No.	Figure No.	Page No.
52DH1669	1	104
52DH1686	1A	104
52DH1687	1A	104
52DH1715	4	106
52DH1716	5	106
52DH1717	6	106
52DH1719	7	106
52DH1721	8	108
52DH1723	2	104
52DH1724	3	104
52DH1725	1	104
52DJ0166	1	90
52DJ0449	4	80
52DJ0951	4	106
52DJ0952	5	106
52DJ0956	4	106
52DJ0957	5	106
52JN0136	2	2
56DH052V	8	108
56DH053F	8	108
56DH054R	8	108
56DH055N	8	108
56DH057Q	8	108
56DH057T	8	108
56DH3X1Y	1	58
56DH3Y1Y	2	58
56DH6D51	2	64
56DH6E51	5	64
56DJ4E1Y	13	46
AA101437	9	24
AK201012	14	100
AP101043	5	30
AP201025	15	100
CL201023	14	92
CS101128	13	10
DD101062	7	10
DD101097	2	36
DD111012	15	44
DD121007	8	12
DD141227	8	80

Part No.	Figure No.	Page No.
DE151006	11	66
DE151008	8	66
DE151012	9	66
DE151037	6	70
DE151043	7	70
DE151046	4	70
DE151047	5	70
DE151048	3	70
DE191010	5	68
DE191043	1	68
DF161102	9	62
DF181098	4	92
DG101029	4	8
DG101418	7	28
DG101418	2	30
DG101498	11	2
DG101498	10	26
DG111008	8	44
DG121040	16	48
DG151089	1	70
DG161121	13	82
DG161124	7	42
DG171025	3	54
DG181008	2	60
DG181008	20	78
DH010120	7	112
DH010121	8	112
DH010130	3A	110
DH010131	3	110
DH010142	7	112
DH010143	8	112
DH010155	3	110
DH010156	3A	110
DH010167	7	112
DH010168	8	112
DH010185	3	110
DH010186	3A	110
DH010201	3	110
DH010202	3A	110
DH010209	7	112

Part No.	Figure No.	Page No.
DH010210	8	112
DH010219	3	110
DH010220	3A	110
DH010240	3	110
DH010241	3A	110
DH010259	3	110
DH010260	3A	110
DH010306	3	110
DH010307	3A	110
DH101006	4	24
DH101072	2	16
DH101078	3	18
DH101079	4	18
DH101080	6	18
DH101082	7	18
DH101108	14	18
DH101110	13	18
DH101111	12	18
DH101116	21	18
DH101117	22	18
DH101121	12	36
DH101125	14	36
DH101141	4	28
DH101142	5	28
DH101146	3	20
DH101152	23	28
DH101154	12	28
DH101163	16	46
DH101172	7	46
DH101195	11	14
DH101197	2	28
DH101199	6	44
DH101203	20	26
DH101235	5	18
DH101272	10	2
DH101275	20	28
DH101295	8	8
DH101319	17	18
DH101321	4	36
DH101353	9	36

Parts Index
BAJAJ pulsar DTS-i 150 BS IV

Part No.	Figure No.	Page No.
DH101355	10	14
DH101355	12	14
DH101373	13	16
DH101379	3	26
DH101380	7	44
DH101381	5	44
DH101385	9	26
DH101385	14	26
DH101385	17	36
DH101385	5	46
DH101386	4	44
DH101389	14	46
DH101392	10	10
DH101393	3	22
DH101394	8	22
DH101394	11	24
DH101396	2	14
DH101397	6	22
DH101412	6	10
DH101414	3	12
DH101416	19	18
DH101424	6	16
DH101487	8	24
DH101493	4	20
DH101496	9	20
DH101502	4	22
DH101508	3	6
DH101509	7	22
DH101531	15	36
DH101536	12	24
DH101537	11	36
DH101538	16	36
DH101539	6	36
DH101540	13	24
DH101540	5	36
DH101540	15	66
DH101544	16	28
DH101545	1	36
DH101581	8	26
DH101581	4	46

Part No.	Figure No.	Page No.
DH101607	9	42
DH101628	9	14
DH101648	11	32
DH101661	11	26
DH101671	5	12
DH101795	8	32
DH101881	11	28
DH101920	16	18
DH102013	8	18
DH102022	18	18
DH102053	4	16
DH102103	1	2
DH102104	1	16
DH102107	4	6
DH102118	5	6
DH102125	8	10
DH102165	2	24
DH102174	11	4
DH102175	5	4
DH102177	1	24
DH102180	9	4
DH102180	10	6
DH102189	8	20
DH102198	10	32
DH102200	4	26
DH102201	5	2
DH102210	3	32
DH102211	4	32
DH102212	6	32
DH102214	1	32
DH102220	1	14
DH102230	2	6
DH102232	6	40
DH102261	10	42
DH102263	8	42
DH102272	2	42
DH102277	5	40
DH102285	1	18
DH102292	11	18
DH102321	1	42

Part No.	Figure No.	Page No.
DH102343	1	24
DH102349	2	42
DH102350	10	42
DH102351	8	42
DH111012	6	6
DH111015	14	44
DH111016	17	44
DH111081	2	44
DH111082	3	44
DH111084	11	46
DH111104	9	44
DH111111	12	44
DH111113	13	44
DH111117	9	44
DH121010	3	34
DH121011	14	28
DH121012	15	28
DH121035	5	34
DH121044	10	38
DH121057	5	38
DH121093	12	38
DH121141	4	38
DH121162	7	38
DH121167	9	38
DH121168	3	38
DH121169	13	38
DH121176	15	38
DH121190	8	40
DH121202	1	40
DH121208	6	4
DH121209	1	38
DH121212	7	40
DH121218	1	38
DH141023	3	80
DH141050		80
DH141069	2	48
DH141070	3	48
DH141071	4	48
DH141072	5	48
DH141073	6	48

Part No.	Figure No.	Page No.
DH141074	8	48
DH141075	7	48
DH151029	10	74
DH151077	1	64
DH151079	4	64
DH151081	14	66
DH161053	2	56
DH161056	3	56
DH161057	6	56
DH161066	7	62
DH161121	4	62
DH161133	1	82
DH161145	5	62
DH161146	8	62
DH161155	8	58
DH161158	6	80
DH161158	14	82
DH161194	14	56
DH161258	1	60
DH161283	5	90
DH161284	2	90
DH161293	15	96
DH161301	7	50
DH161368	7	100
DH161424	6	60
DH161429	18	48
DH161458	3	110
DH161459	3A	110
DH161468	10	56
DH161470	15	56
DH161471	6	62
DH161485	18	100
DH161495	1	50
DH161497	6	50
DH161499	1	52
DH161509	8	102
DH161540	2	50
DH161554	13	96
DH161559	11	60
DH171012	11	54

Parts Index
BAJAJ pulsar DTS-i 150 BS IV

Part No.	Figure No.	Page No.
DH171013	8	54
DH171014	7	54
DH171015	9	54
DH171019	10	54
DH171019	18	72
DH171023	1	54
DH181009	12	78
DH181015	13	78
DH181052	9	92
DH181063	4	78
DH181092	23	78
DH181092	13	92
DH181099	27	76
DH181101	5	78
DH181119		76
DH181122	2	52
DH181123	1	78
DH181124	28	78
DH181125	29	78
DH181127	9	78
DH181128	16	78
DH181129	11	78
DH181130	24	76
DH181130	1	80
DH181131	3	76
DH181133	2	76
DH181135	1	76
DH181135	19	78
DH191001	1	74
DH191006	4	74
DH191007	12	76
DH191008	13	76
DH191012	12	74
DH191017	23	76
DH191019	14	76
DH191066	1	86
DH201076	1	100
DH201077	2	100
DH201079	2	88
DH201093	11	62

Part No.	Figure No.	Page No.
DH201105	5	100
DH201107	5	100
DH211005	2	98
DH211012	1	84
DH221012	3	102
DH221013	4	102
DJ101063	23	18
DJ101064	4	42
DJ101705	6	26
DJ121059	14	38
DJ121089	7	4
DJ141008	5	52
DJ141008	6	82
DJ141056	7	80
DJ151032	1	72
DJ151033	11	72
DJ151036	15	54
DJ151037	16	54
DJ151042	9	74
DJ151047	17	54
DJ151073	8	70
DJ151074	9	70
DJ151075	10	70
DJ151076	2	68
DJ151094	7	66
DJ151115	17	72
DJ161012	8	30
DJ161069	5	60
DJ161072	8	96
DJ161088	9	50
DJ161090	13	56
DJ161091	3	60
DJ161122	5	58
DJ161126	1	56
DJ161127	12	56
DJ161128	3	58
DJ161129	4	58
DJ161214	1	62
DJ161221	10	60
DJ161227	4	90

Part No.	Figure No.	Page No.
DJ161229	11	92
DJ161254	9	60
DJ161278	7	58
DJ161416	9	108
DJ171008	12	54
DJ171031	6	54
DJ181033	3	92
DJ181037	7	92
DJ181041	25	78
DJ181052	22	78
DJ181065	3	40
DJ181065	12	82
DJ181069	8	92
DJ181085	21	78
DJ181087	3	78
DJ181089	10	50
DJ181119	5	86
DJ181120	2	92
DJ181131	13	66
DJ191010	5	74
DJ191015	3	88
DJ191021	2	74
DJ191027	6	68
DJ191028	7	68
DJ191029	8	68
DJ191030	9	68
DJ191031	10	68
DJ191034	13	68
DJ191035	14	68
DJ191056	11	68
DJ191057	3	68
DJ191061	1	88
DJ191081	7A	76
DJ191082	7	76
DJ191083	8	76
DJ201072	15	92
DJ201072	6	96
DJ201109	12	68
DJ201137	3	86
DJ201140	11	100

Part No.	Figure No.	Page No.
DJ201140	16	100
DJ201159	6	86
DJ201202	11	44
DJ201206	2	94
DJ201207	1	94
DJ201246	20	76
DJ211006	3	84
DJ211007	6	84
DJ221003	1	102
DJ221004	2	102
DJ221019	1	98
DK101063	1	12
DK101135	10	20
DK101159	1	20
DK101160	2	20
DK101176	6	46
Dk101237	11	12
DK101237	23	26
DK101380	13	26
DK101480	13	28
Dk101503	10	12
DK101503	22	26
DK101574	7	32
DK101592	7	12
DK101596	15	46
DK101605	2	46
DK101636	21	28
DK101722	2	22
DK101725	5	22
DK101732	5	20
DK101733	1	22
DK101738	19	28
DK101748	1	8
DK101751	2	8
DK101755	3	8
DK101770	25	28
DK121015	4	40
DK141028	11	80
DK151026	3	64
DK151069	4	68

Parts Index
BAJAJ pulsar DTS-i 150 BS IV

Part No.	Figure No.	Page No.
DK151094	10	72
DK161123	9	82
DK161124	10	82
DK161153	2	96
DK161171	15	82
DK161172	16	82
DK181043	15	76
DK181082	21	76
DK181086	22	76
DK201003	1	96
DK201065	10	80
DK201078	10	100
DK211007	2	84
DL181010	6	92
DL191014	9	76
DP161144	12	96
DP161145	9	96
DS101071	24	28
DS101084	7	2
DS101154	5	14
DS101166	4	2
DS101215	8	28
DS101353	9	28
DS101353	7	30
DS101353	12	46
DS151068	9	72
DS151073	8	72
DS161125	4	60
DS181071	10	78
DS181072	17	78
DS211005	5	84
DS221001	9	102
DV101042	3	30
GH201012	3	94
GL171036	11	48
JA581233	6	38
JB122016	2	54
JB131017	1	66
JB131018	16	66
JB401402	18	76

Part No.	Figure No.	Page No.
JB591059	11	42
JC101034	11	10
JC101035	9	10
JC101085	2	10
JC101086	3	10
JC101114	3	46
JC101145	8	46
JC141015	3	82
JC141016	4	82
JC141017	2	82
JC201027	18	44
JC201051	1	92
JD113814	13	4
JD113815	14	4
JD351206	16	44
JD401400	6	76
JE541212	6	30
JE581039	4	4
JE581416	8	4
JF131010	2	64
JF131211	5	64
JF401400	5	76
JF401807	6	100
JG171029	14	48
JG171086	12	48
JG401808	8	100
JG551443	9	32
JH171038	9	48
JH171048	10	48
JL402004	12	100
JL403600	13	62
JL581065	12	4
JL581066	3	4
JN131603	2	66
JN131812	15	72
JP581018	9	40
JW401011	7	96
JY171069	13	48
JY171070	15	48
JY171077	1	48

Part No.	Figure No.	Page No.
JY171825	17	48
JY581028	10	40
JZ113813	14	62
JZ151083	3	52
KACA0516	2	80
KACA0830	4	76
KACF0830	7	78
KADA0814	5	102
KADA0820	16	56
KADA0845	10	102
KADD0514	12	62
KADD0625	10	76
KADF0630	15	4
KAEG0614	10	4
KAEG0614	9	6
KBBJ0514	13	60
KBBM0408	6	66
KBUA0514	2	40
KCBA0605	12	92
KCGA0505	12	80
KCGF0606	16	4
KCKE0507	12	60
KDBF0512	14	60
KJAB1019	12	26
KPBC6004	7	72
KPBC6202	12	72
KPBC6301	10	66
KPBC6302	14	72
LAC00020	25	76
LAD00126	11	56
LCB00005	4	72
LDB00001	2	72
PD511224	1	10
PD511229	5	10
PD531029	13	14
PD551433	5	32
PD582200	1	4
PF131220	5	72
YDH13001	16	92
YDH19002	7	86

Part No.	Figure No.	Page No.
YDH19003	1	42

Parts Index

BAJAJ pulsar DTS-i 150 BS IV

Part No.	Figure No.	Page No.

Part No.	Figure No.	Page No.

Part No.	Figure No.	Page No.

Part No.	Figure No.	Page No.

Parts Index
BAJAJ pulsar DTS-i 150 BS IV

Part No.	Figure No.	Page No.

Part No.	Figure No.	Page No.