BAJAJ pulsar DTS-i 180 FI

BAJAJ THE WORLD'S FAVOURITE INDIAN

BAJAJ pulsar DTS-i 180 FI

Spare Parts Catalogue

THE WORLD'S FAVOURITE INDIAN



LOVED IN 70 COUNTRIES

Bajaj Auto Limited
Akurdi Pune 411 035 India
www.bajajauto.com

Notice

BAJAJ Pulsar DTS-i 180 FI

All Information Contained In This Manual Is Based On The Latest Product Information At The Time Of Publication. Bajaj Auto Limited Accepts No Liability For Any Inaccuracies Or Omissions In This Publication, Although Every Possible Care Has Been Taken To Make It As Complete And Accurate As Possible. All Procedures And Specifications Subject To Change Without Prior Notice. The Right Is Reserved To Make Such Changes At Any Time Without Prior Notice And Without Incurring An Obligation To Make Such Changes To Product Manufactured Previously. Contact Your Authorized Bajaj Dealer For The Latest Information On Product Improvements Incorporated After This Manual Was Issued.

Revision 00

Copy rights : All rights reserved. No part of this publicatin may be reproduced, stored in a retrival system, Or transmitted in any form or by any means, electromic mechanical photocopying, recording or otherwise, without the prior written permission of Bajaj Auto LTD.

Foreword

BAJAJ Pulsar DTS-i 180 FI

We Have Pleasure In Presenting The Spare Parts Catalogue For 'Pulsar 180 FI_SPC' Motorcycle. This Catalogue Has Been Specially Designed To Assist You In Selecting The Correct Parts For Procurement To Maintain 100% Availability.

The Bajaj Spares Are Subjected To The Stringent Quality Control Standards To Ensure Longer Life Of The Vehicle. It Is Therefore Necessary That Only The Genuine Bajaj Spares Are Used.

In A Continual Effort To Improve Performance And Efficiency Of The Vehicles, Specifications, Diagrams, Illustrations And Part Numbers Can Change Without Notice. Consequently, The Description In This Spare Parts Catalogue Cannot Therefore Be Final And Binding On Us.

The Modifications / Alterations Which Are Carried Out After The Issue Of This Catalogue, Will Be Conveyed To You Through Our Service Circulars. You Are Requested To Make Necessary Corrections In The Parts Catalogue As Per The Circulars So As To Keep Your Catalogue Up-to-date. This Will Ensure The Appropriate And Speedy Delivery Of The Spare Parts As The Order Placed Will Bear The Latest Part Numbers.

In Case, If You Need Any Technical Assistance Contact The Concerned Regional Office Or Write To Us On The Following Address :

Bajaj Auto Limited
Spares - International Business
Akurdi, Pune 411 035 India

Instructions

BAJAJ Pulsar DTS-i 180 FI

1. How To Read The Catalogue : Open The Catalogue And From The Pictorial Index Locate The Group In Which The Part You Want To Find Is Present. Turn Over To The Concerned Page Number (as Given By Pictorial Index). Now Find Out The Figure Of The Part You Wish To Order. Write Down The Part Number Against That Particular Figure Number From The Text.

   In Case, If You Have The Part Number And You Need The Other Details, The Part Index Can Be Used. The Part Index (at The End Of The Catalogue) Will Give You The Figure And Page Number Of The Part You Wish To Order.

2. How To Order Spare Parts : The Part Number And The Description Of The Part Required Should Be Invariably Mentioned In The Order As Per The Catalogue Text.

   The Latest Part Number As Conveyed Through Our Service Circulars Should Only Appear On The Order. In Case Of Ordering Painted Components, Colour Shade Of The Components Should Be Mentioned.

   The Quantity Shown Against The Part Number Is The Quantity Per Vehicle For That Group So That Particular Quantity Should Be Multiplied By The Number Of Sets Required.

3. Part Number System : We Have Used 8 Digit System For Part Numbers. The Model Or Hardware Item Is Indicated By First Two Digits Or Alphanumeric, The Next Two Or Four Digits Indicate Main Group And The Last Four Or Two Digits Indicate Serial Number In Main Group Or Serial Number Or Subgroup Of Fastener Respectively. Thus The Part Numbers Will Be Indicated By 2-2-4 Or 2-4-2 Digit System. Understanding This System Will Enable You To Identify The Spare Parts Easily.

4. Abbreviations : The Following Abbreviations Are Used In This Catalogue.

Assly	Assembly	V	Volts
N.I.	Not Illustrated	W	Watts
C'Case	Crankcase	Accl.	Accelerator
Cyl	Cylinder	Comp.	Complete
O/S	Over Size	FR.	Front
RR.	Rear	Std.	Standard
L	Length	A/t.	Alternate
R.H.	Right Hand	L.H.	Left Hand
Hex.	Hexagonal	AR	As Required

Index

BAJAJ Pulsar DTS-i 180 FI

Plate No.	Description	Page No.
1	Cover Cylinder Head	2
2	Cylinder Head	4
3	Valve	6
4	Camshaft / Tensioner	8
5	Cylinder And Piston	10
6	Crankshaft Assembly	12
7	Balancer & Balancer Idler Gear	14
8	Transmission	16
9	Change Drum / Shaft Fork	18
10	Gear Change Mechanism	20
11	Engine Assembly / Crankcase RH	22
12	Crankcase LH	24
13	Clutch Cover	26
14	Magneto Cover Assembly	28
15	Clutch Assembly	30
16	Throttle Body Assembly	32
17	Air Filter Assembly	34
18	Silencer Assembly	36
19	Seat Assembly & Seat Lock	38
20	Oil Pump Assembly	40
21	Magneto, ECU & H.T. Coil	42
22	Starter Assembly	44
23	Engine Mountings	46
24	Frame and Frame Fittings	48
25	Swing Arm / Rear Shock Absorber	50
26	Rider, Pillion Foot Rest & Step Holder	52
27	Mudguard - Front & Rear	54
28	Stand Assembly	56
29	Tube / Tyre / Rim	58
30	Front Hub	60
31	Front Master Cylinder	62

WORLD'S FAVOURITE INDIAN

Plate No.	Description	Page No.
32	Front Disc Brake	64
33	Rear Hub	66
34	Rear Disc Brake System	68
35	Rear Disc Brake - Master Cylinder & Caliper	70
36	Rear Brake Pedal	72
37	Handle Bar	74
38	Front Fork	76
39	Fuel Tank, Cap Tank, Fuel Gauge & Fuel Pump	78
40	Fittings - Fuel Tank, Side Cover & Cover Seat	80
41	Speedometer Assembly	82
42	Control Cables	84
43	Chain Case	86
44	Head Lamp Assembly & Fairing	88
45	Indicator Light Assembly	90
46	Tail Lamp Assembly & Front/Rear Number Plate	92
47	Tool Kit	94
48	Electrical Equipments	96
49	Accessories / Grab Handle	98
50	Non Painted Parts & Decals	100,102
51	Painted Parts & Decals	104,106
	Kit List	107 To 108
	Amendment Sheet	109 To 110
	Parts Index	111 To 122

Index

BAJAJ Pulsar DTS-i 180 FI

Plate No.	Description	Page No.

THE WORLD'S FAVOURITE INDIAN

COVER CYLINDER HEAD	PLATE NO. 1 / PAGE NO. 1
CYLINDER HEAD	PLATE NO. 2 / PAGE NO. 3
VALVE	PLATE NO. 3 / PAGE NO. 5
CAMSHAFT / TENSIONER	PLATE NO. 4 / PAGE NO. 7

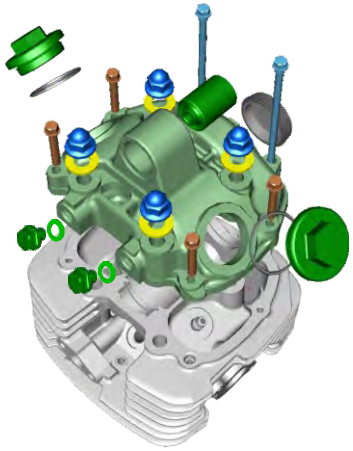

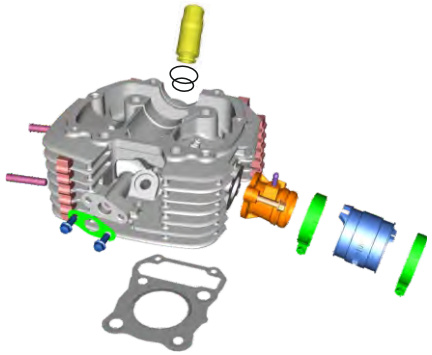

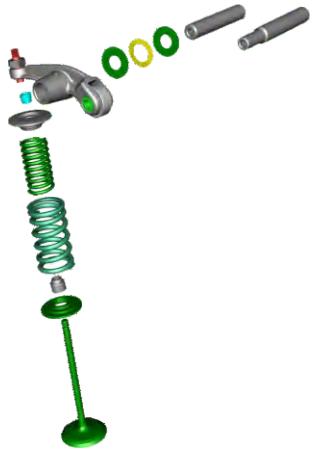

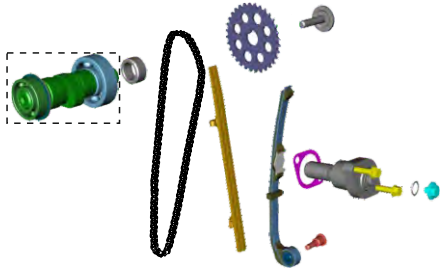

Pictorial Index

BAJAJ Pulsar DTS-i 180 FI

CYLINDER AND PISTON	PLATE NO. 5 / PAGE NO. 9
CRANKSHAFT ASSEMBLY	PLATE NO. 6 / PAGE NO. 11
BALANCER & BALANCER IDLER GEAR	PLATE NO. 7 / PAGE NO. 13
TRANSMISSION	PLATE NO. 8 / PAGE NO. 15

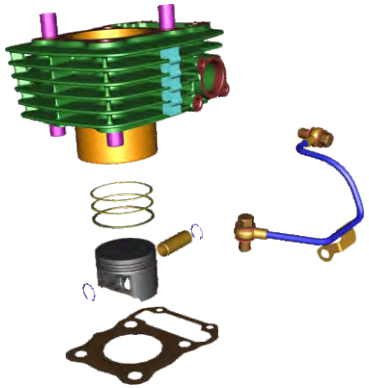

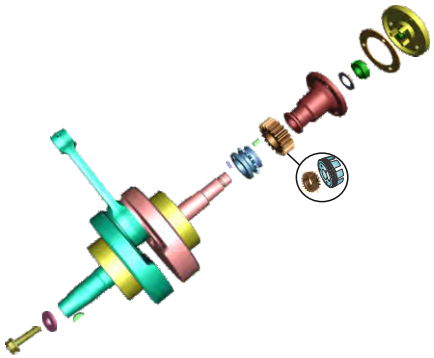

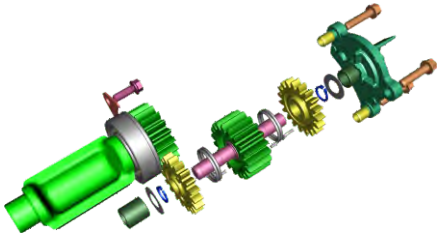

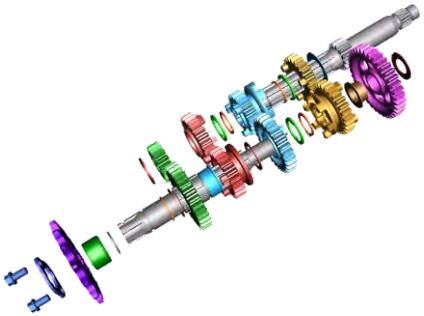

CHANGE DRUM / SHAFT FORK	PLATE NO. 9 / PAGE NO. 17
GEAR CHANGE MECHANISM	PLATE NO. 10 / PAGE NO. 19
ENGINE ASSEMBLY & CRANKCASE RH	PLATE NO. 11 / PAGE NO. 21
CRANKCASE LH	PLATE NO. 12 / PAGE NO. 23
CLUTCH COVER	PLATE NO. 13 / PAGE NO. 25
MAGNETO COVER ASSEMBLY	PLATE NO. 14 / PAGE NO. 27
CLUTCH ASSEMBLY	PLATE NO. 15 / PAGE NO. 29
THROTTLE BODY ASSEMBLY	PLATE NO. 16 / PAGE NO. 31

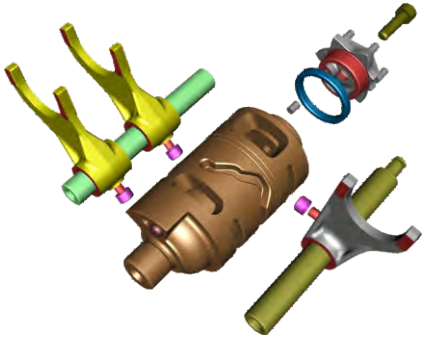

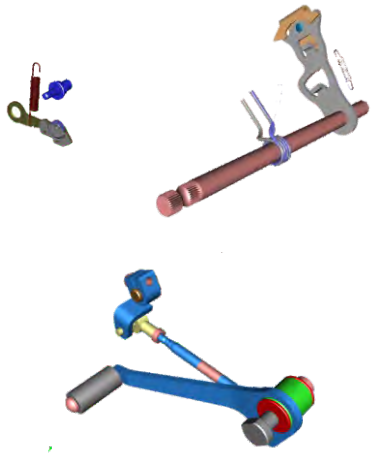

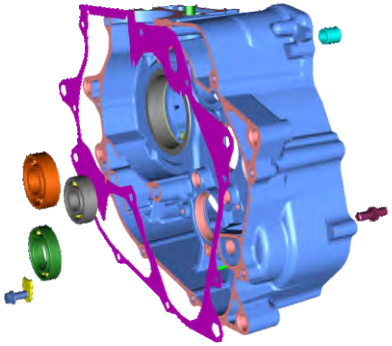

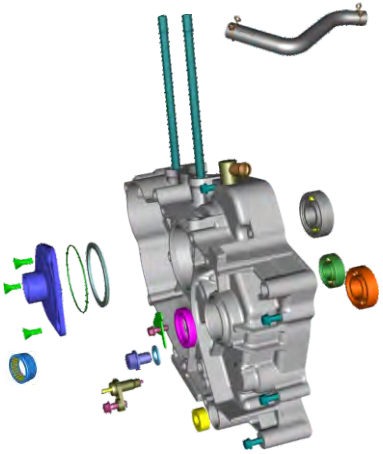

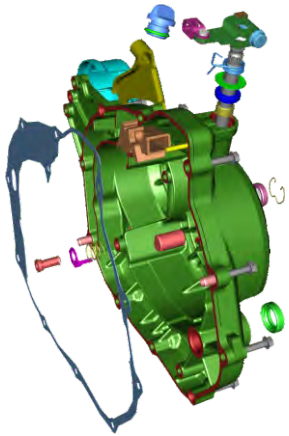

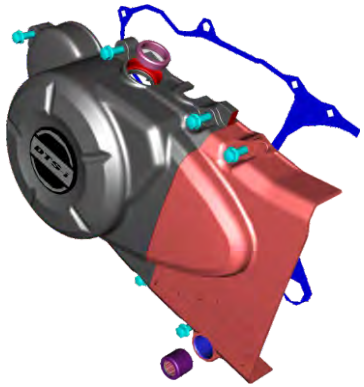

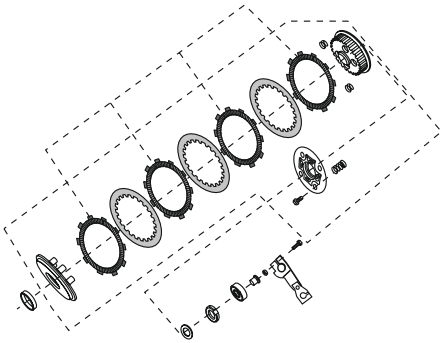

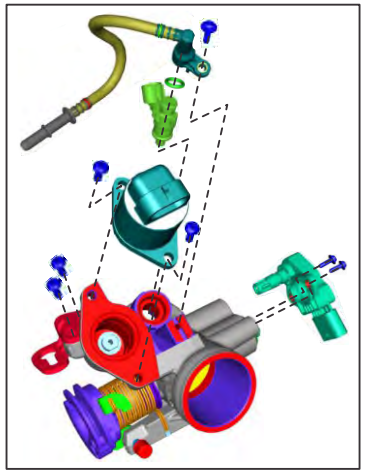

Pictorial Index

BAJAJ Pulsar DTS-i 180 FI

AIR FILTER ASSEMBLY	PLATE NO. 17 / PAGE NO. 33
SILENCER ASSEMBLY	PLATE NO. 18 / PAGE NO. 35
SEAT ASSEMBLY & SEAT LOCK	PLATE NO. 19 / PAGE NO. 37
OIL PUMP ASSEMBLY	PLATE NO. 20 / PAGE NO. 39

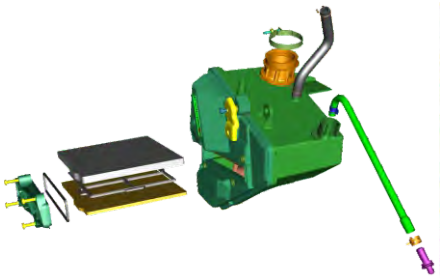

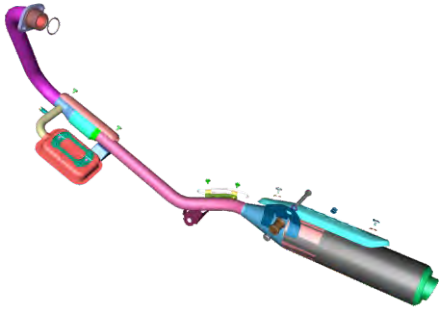

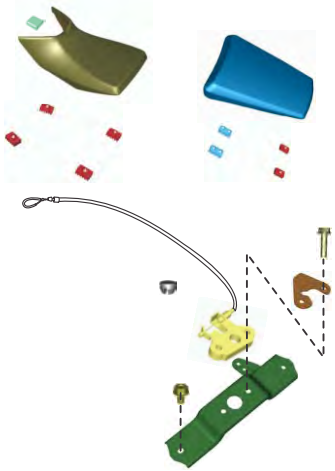

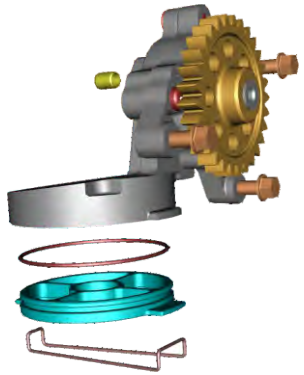

Pictorial Index

BAJAJ Pulsar DTS-i 180 FI

MAGNETO, ECU & H.T. COIL	PLATE NO. 21 / PAGE NO. 41
STARTER ASSEMBLY	PLATE NO. 22 / PAGE NO. 43
ENGINE MOUNTINGS	PLATE NO. 23 / PAGE NO. 45
FRAME AND FRAME FITTINGS	PLATE NO. 24 / PAGE NO. 47

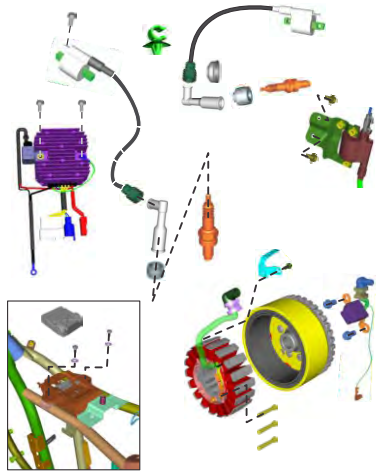

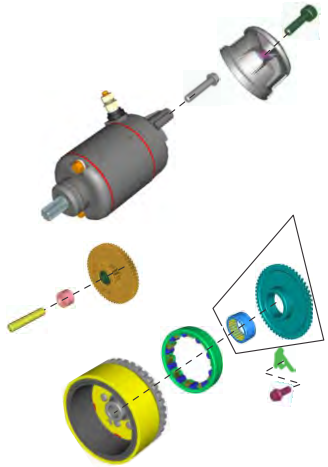

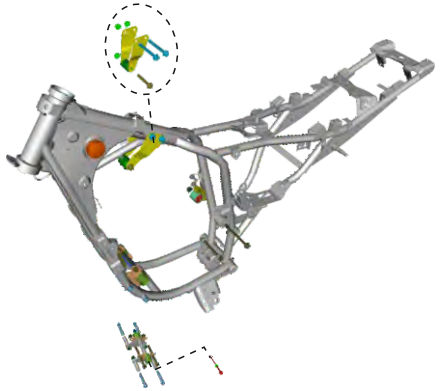

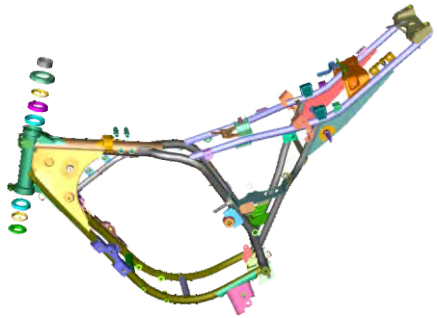

SWING ARM / REAR SHOCK ABSORBER	PLATE NO. 25
	PAGE NO. 49

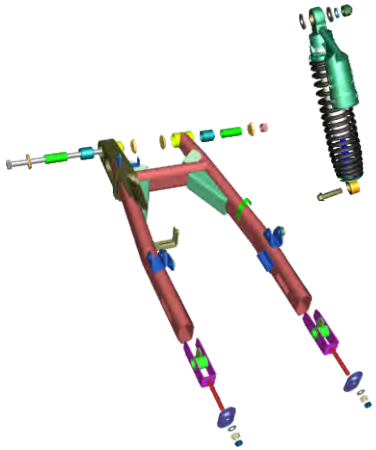

RIDER, PILLION FOOT REST & STEP HOLDER	PLATE NO. 26
	PAGE NO. 51



MUDGUARD - FRONT & REAR	PLATE NO. 27
	PAGE NO. 53

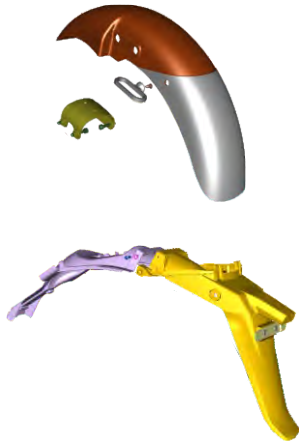

STAND ASSEMBLY	PLATE NO. 28
	PAGE NO. 55



Pictorial Index

BAJAJ Pulsar DTS-i 180 FI

TUBE / TYRE / RIM	PLATE NO. 29
	PAGE NO. 57



FRONT HUB	PLATE NO. 30
	PAGE NO. 59

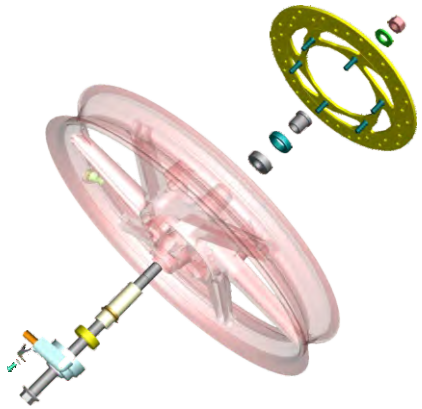

FRONT MASTER CYLINDER	PLATE NO. 31
	PAGE NO. 61

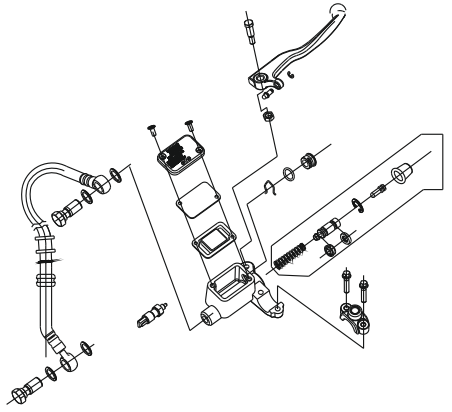

FRONT DISC BRAKE	PLATE NO. 32
	PAGE NO. 63

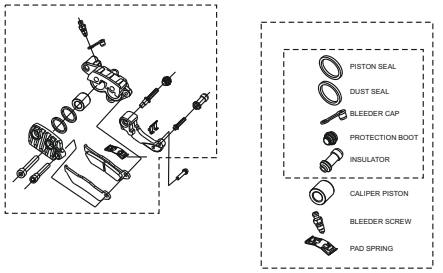

REAR HUB	PLATE NO. 33 / PAGE NO. 65
REAR DISC BRAKE SYSTEM	PLATE NO. 34 / PAGE NO. 67
REAR DISC BRAKE - MASTER CYLINDER & CALIPER	PLATE NO. 35 / PAGE NO. 69
REAR BRAKE PEDAL	PLATE NO. 36 / PAGE NO. 71

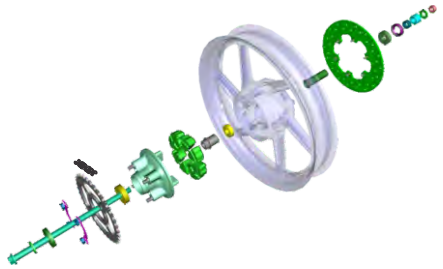

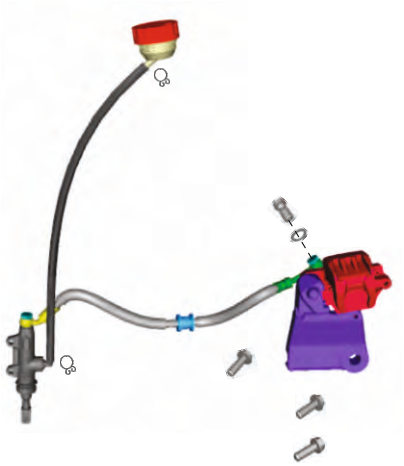

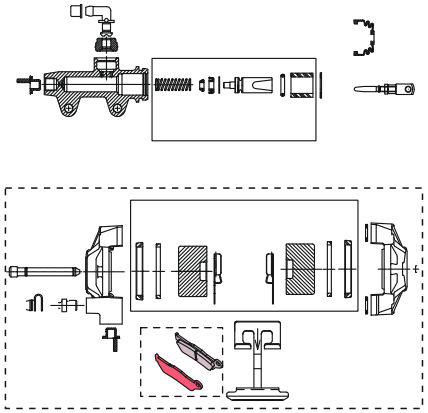

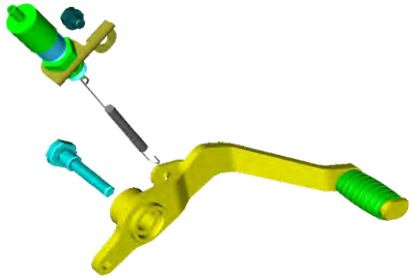

Pictorial Index

BAJAJ Pulsar DTS-i 180 FI

HANDLE BAR	PLATE NO. 37 / PAGE NO. 73
FRONT FORK	PLATE NO. 38 / PAGE NO. 75
FUEL TANK, CAP TANK, FUEL GAUGE & FUEL PUMP	PLATE NO. 39 / PAGE NO. 77
FITTINGS - FUEL TANK, SIDE COVER & COVER SEAT	PLATE NO. 40 / PAGE NO. 79

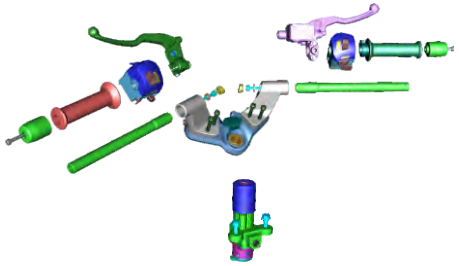

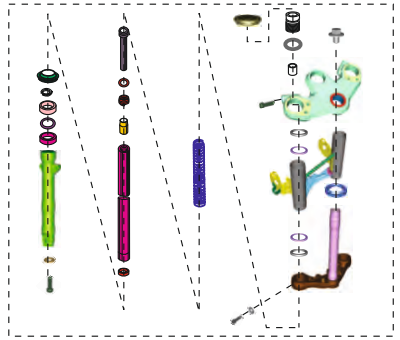

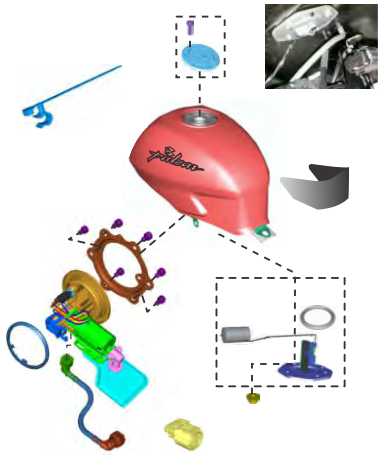

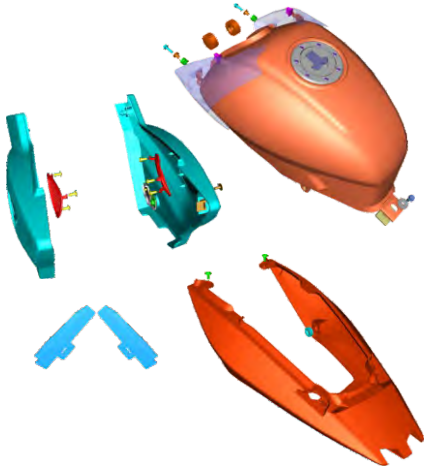

SPEEDOMETER ASSEMBLY	PLATE NO. 41 / PAGE NO. 81
CONTROL CABLES	PLATE NO. 42 / PAGE NO. 83
CHAIN CASE	PLATE NO. 43 / PAGE NO. 85
HEAD LAMP ASSEMBLY & FAIRING	PLATE NO. 44 / PAGE NO. 87

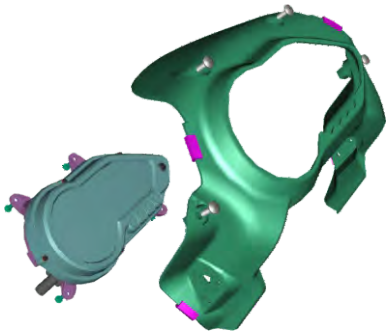



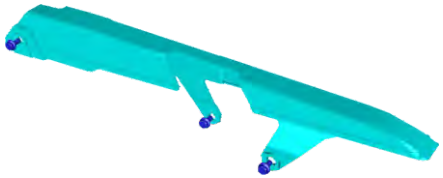

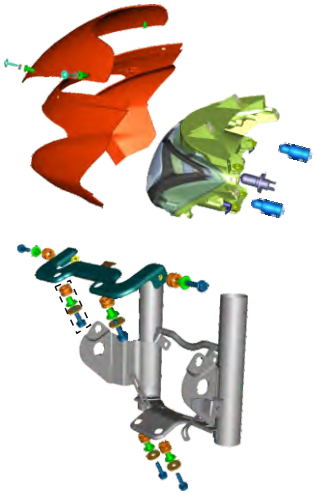

Pictorial Index

BAJAJ pulsar DTS-i 180 FI

INDICATOR LIGHT ASSEMBLY	PLATE NO. 45 / PAGE NO. 89
TAIL LAMP ASSEMBLY & FRONT / REAR NUMBER PALTE	PLATE NO. 46 / PAGE NO. 91
TOOL KIT	PLATE NO. 47 / PAGE NO. 93
ELECTRICAL EQUIPMENTS	PLATE NO. 48 / PAGE NO. 95

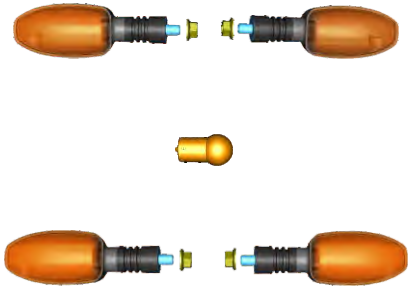





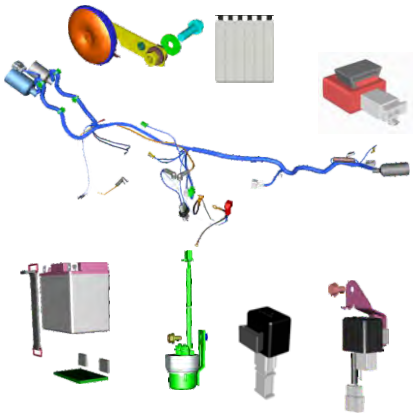

ACCESSORIES / GRAB HANDLE	PLATE NO. 49
	PAGE NO. 97

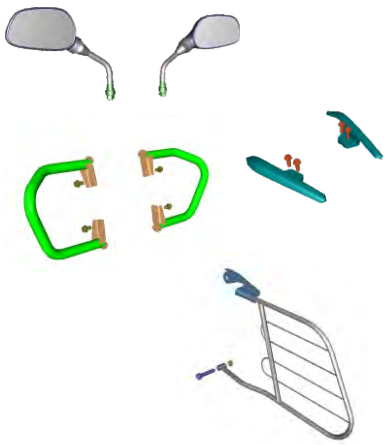

NON PAINTED PARTS & DECALS	PLATE NO. 50
	PAGE NO. 99,101



PAINTED PARTS & DECALS	PLATE NO. 51
	PAGE NO. 103,105



	PLATE NO.
	PAGE NO.

	PLATE NO.
	PAGE NO.

	PLATE NO.
	PAGE NO.

	PLATE NO.
	PAGE NO.

Pictorial Index

BAJAJ pulsar DTS-i 180 FI

	PLATE NO.
	PAGE NO.

	PLATE NO.
	PAGE NO.

	PLATE NO.
	PAGE NO.

	PLATE NO.
	PAGE NO.

Cover Cylinder Head

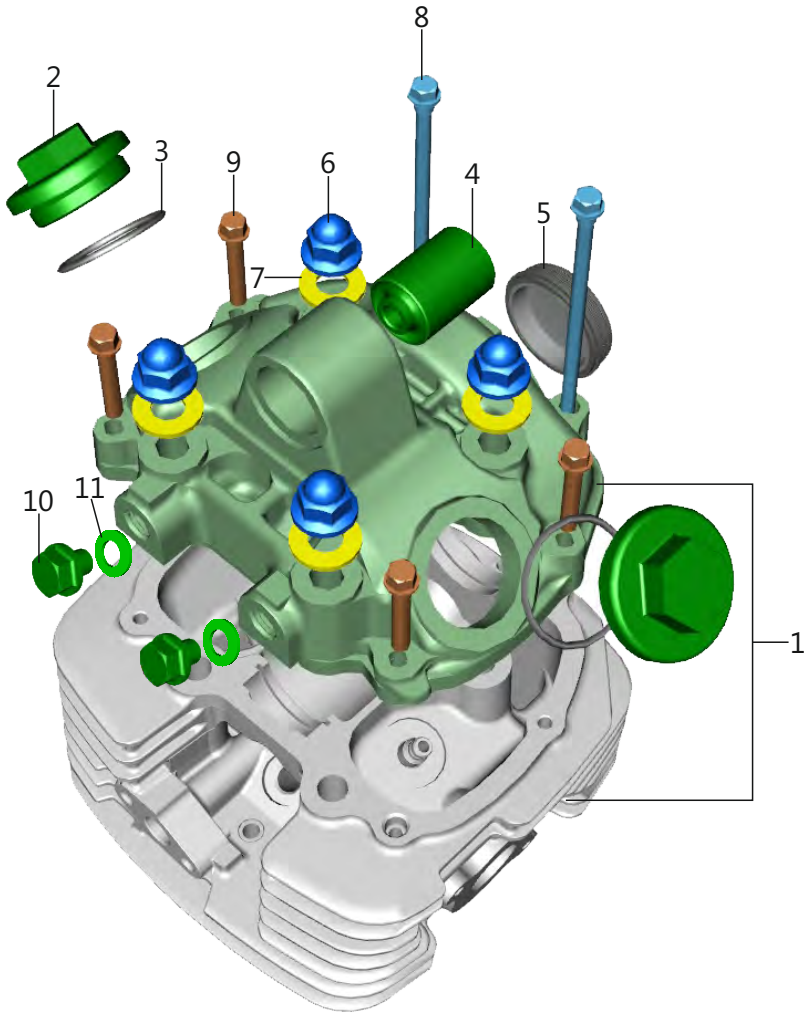

No.	Part No	Description	Qty	Remarks
1	DJ 1018 11	Head Cylinder-Cover Assembly	1	
2	52 JN01 36	Tappet Cover With O-Ring	2	
3	39 2391 21	O-Ring	1	
4	DS 1011 66	Silent Bush (V)	1	
5	DH 1022 01	Camshaft Cap	1	
6	39 2647 15	Domed Cap Nut	4	
7	DS 1010 84	Copper Gasket	4	
8	39 2532 04	Hex. Bolt With Flange	2	
9	KA EW06 35	Bolt Flange Small-m6x1xl35xbright	4	
10	DH 1019 16	Bolt Fl-m12x1.5xl 15xbrtxprecoat	2	
11	DG 1014 98	Gasket	2	

THE WORLD'S FAVOURITE INDIAN

Cylinder Head

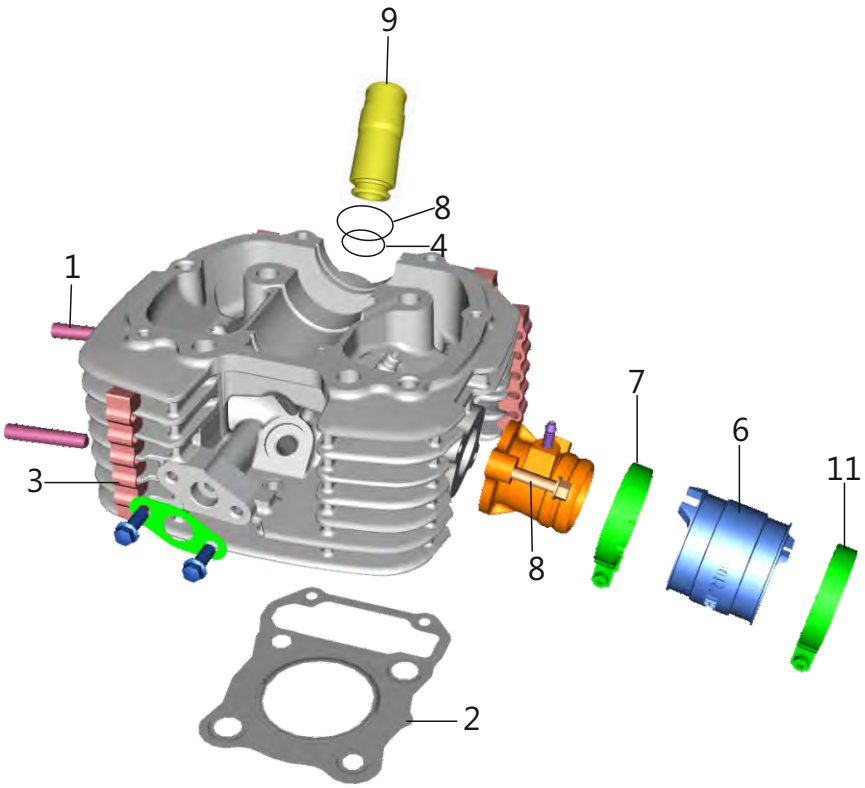

No.	Part No	Description	Qty	Remarks
1	39 1660 05	Stud (Exhaust)	2	
2	DJ 1010 12	Gasket Cylinder Head	1	
3	DH 1015 08	Damper Cylinder Head	5	
4	KJ AC18 24	O-Ring	1	
5	39 1283 21	'O' Ring (Intake Pipe)	1	N.I.
6	DJ 1211 38	Sleeve Manifold	1	
7	DH 1021 18	Clamp	1	
8	39 1283 21	O-Ring	1	
9	DJ 1017 38	Sleeve Plug Spark	1	
10	39 2608 01	Grub Screw	1	N.I.
11	JU 5810 14	Clamp	1	

THE WORLD'S FAVOURITE INDIAN

Valve

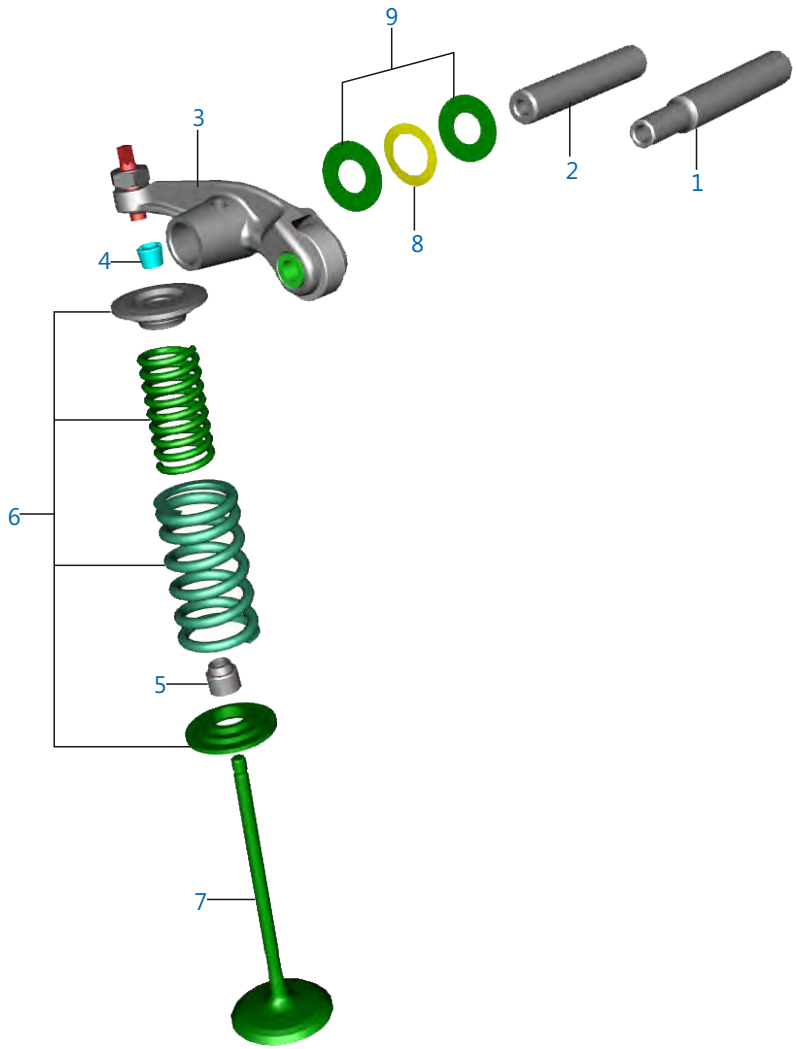

No.	Part No	Description	Qty	Remarks
1	DK 1017 48	Rocker Arm Shaft - Intake	1	
2	DK 1017 51	Rocker Arm Shaft - Exhaust	1	
3	DK 1017 55	Rocker Arm Assembly	2	
4	DG 1010 29	Cotter Valve	4	
5	39 2017 19	Seal Valve stem	2	
6	DK 1013 26	Valve Repair Kit	1	
7	36 DJ41 05	Valve Kit	1	
8	DH 1012 95	Wave Washer	2	
9	39 2440 11	Plain Washer	4	

THE WORLD'S FAVOURITE INDIAN

Camshaft / Tensioner

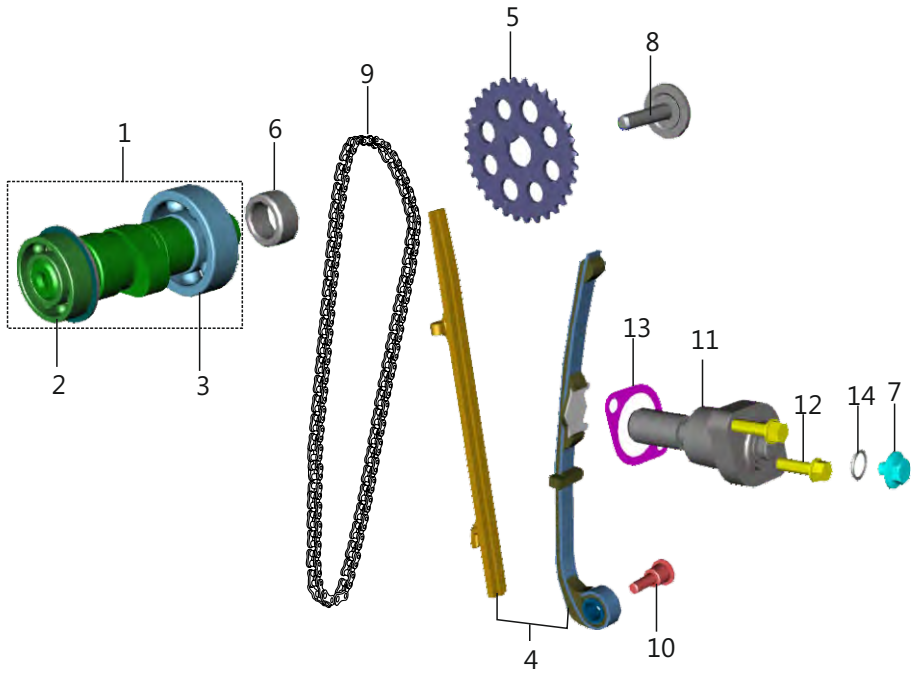

No.	Part No	Description	Qty	Remarks
1	DJ 1017 88	Camshaft Assembly	1	
2	39 2542 20	Bearing - Ball-15x42x13	1	
3	39 1880 20	Bearing - Ball :- 15 X 32 X 9	1	
4	36 DH42 45	Kit Cam Chain Guide	1	
5	JE 5112 37	Cam Sprocket Silent Chain D106A	1	
6	DH 1014 12	Collar Cam Sprocket	1	
7	DD 1010 62	Bolt	1	
8	DH 1021 25	Hex. Soc. Head Cap Bolt	1	
9	PD 5110 84	Chain	1	
10	DH 1013 92	Cam Chain Tensioner Pivot Bolt	1	
11	JC 1010 34	Tensioner Assembly	1	
12	KA ED06 20	Bolt-Flanged-Small	2	
13	CS 1011 28	Gasket	1	
14	39 2669 21	Ring - O (ID 10.15 X 1.5)	1	

THE WORLD'S FAVOURITE INDIAN

Cylinder And Piston

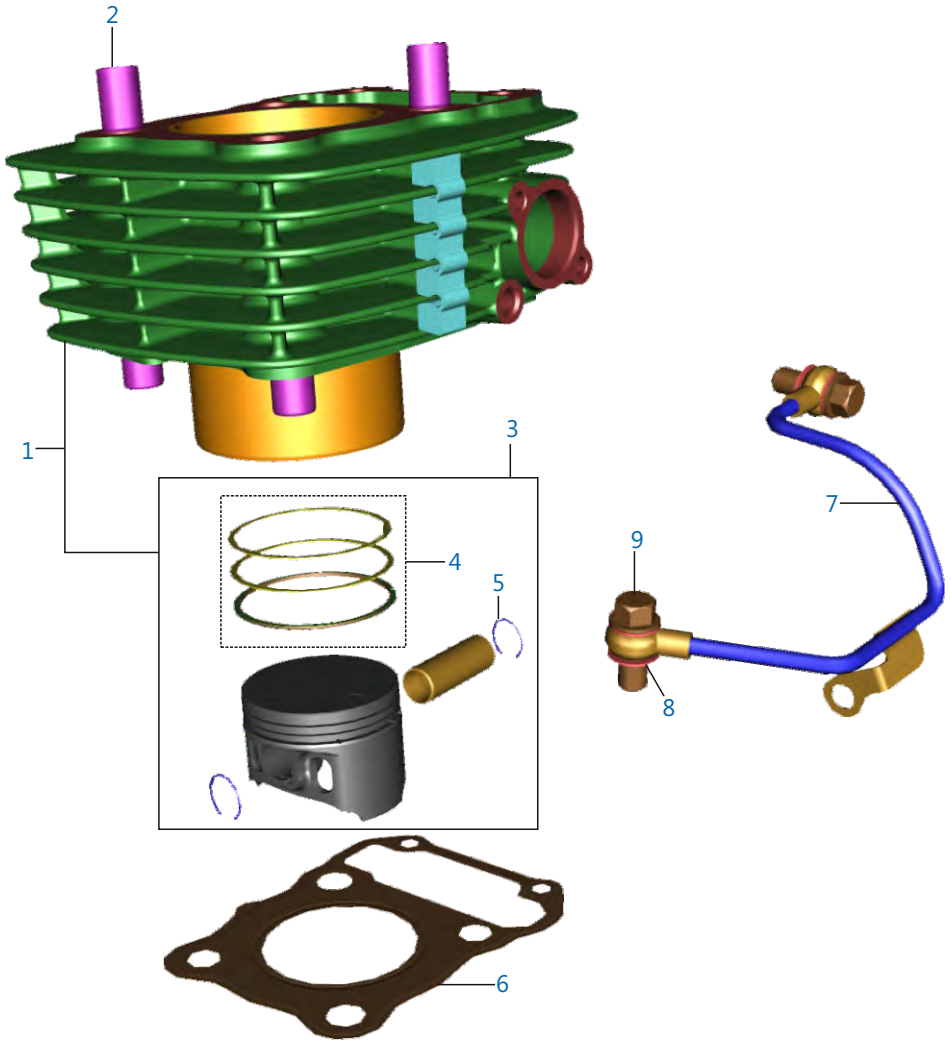

No.	Part No	Description	Qty	Remarks
1	36 DJ41 06	Block Piston Assembly	1	
2	39 2181 06	Pin Dowel	4	
3	DJ 1018 15	Piston Assembly	1	
4	DK 1810 12	Ring Set Piston	1	
5	39 2132 17	Ring Snap	2	
6	DK 1010 63	Gasket Cylinder Block	1	
7	DH 1024 48	Pipe Assembly Oil	1	
8	31 1210 06	Gasket	4	
9	DD 1210 07	Bolt	2	

THE WORLD'S FAVOURITE INDIAN

Crankshaft Assembly

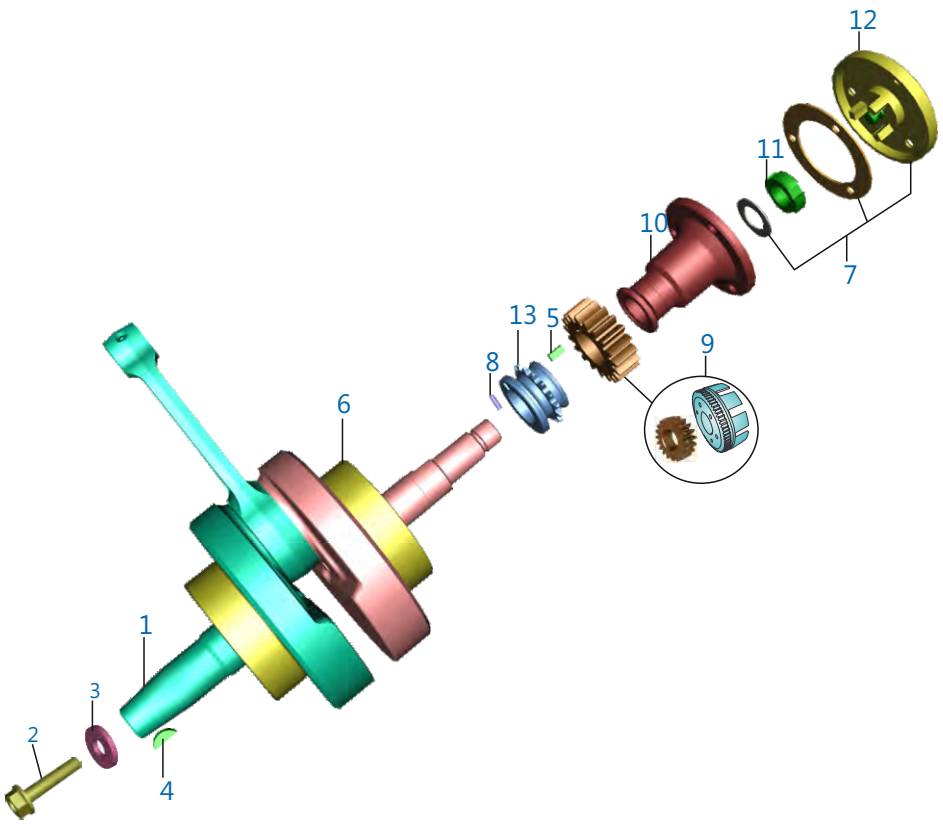

No.	Part No	Description	Qty	Remarks
1	DJ 1017 86	Crankshaft Assembly	1	
2	DH 1013 96	Bolt	1	
3	39 2165 11	Plain Washer	1	N.I.
4	31 1011 73	Key Woodruff	1	
5	DS 1011 54	Parallel Key	1	
6	39 1931 20	Bearing Ball	2	
7	36 DK00 07	Kit Centrifugal Over Screw Oil Filter	1	
8	39 2203 07	Parallel Pin	1	
9	36 DK00 38	Kit Gear Primary Drive & Driven	1	
10	DH 1010 64	Body Centrifugal Oil Filter	1	
11	DH 1011 95	Nut Primary Drive	1	
12	DH 1013 55	Cover Complete Centrifugal Oil Filter	1	
13	DK 1010 68	Sprocket Cam Drive (17 T)	1	

THE WORLD'S FAVOURITE INDIAN

Balancer & Balancer Idler Gear

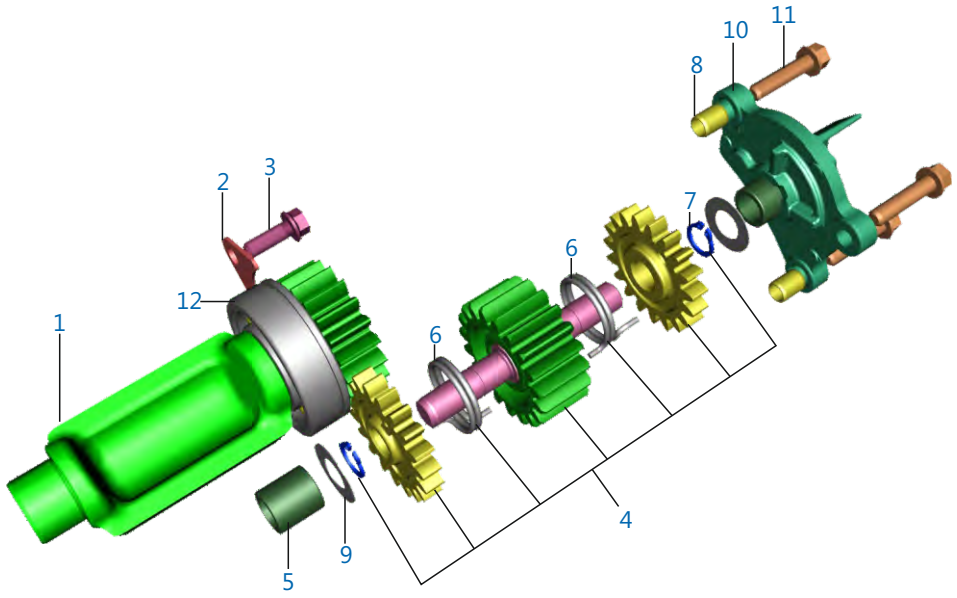

No.	Part No	Description	Qty	Remarks
1	PD 5312 32	Balancer Assembly	1	
2	DH 1010 72	Bearing Stopper	1	
3	LA E000 42	Bolt Flanged-M6x1	1	
4	PD 5312 29	Assembly Gear Balancer Idler	1	
5	39 2152 20	Needle Roller bearing	2	
6	DH 1014 24	Spring - Torsion :- Balancer	2	
7	KE AB10 10	Circlip External	2	
8	39 1686 06	Dowel Pin	2	
9	39 1620 11	Spring Steel Washer	2	
10	52 DH01 77	Balancer Idler Holder With Bearing	1	
11	KA ED06 25	Bolt-Flange-kae St-d Dia-06 L-25	3	
12	59 2000 28	Bearing Balancer	1	

THE WORLD'S FAVOURITE INDIAN

Transmission

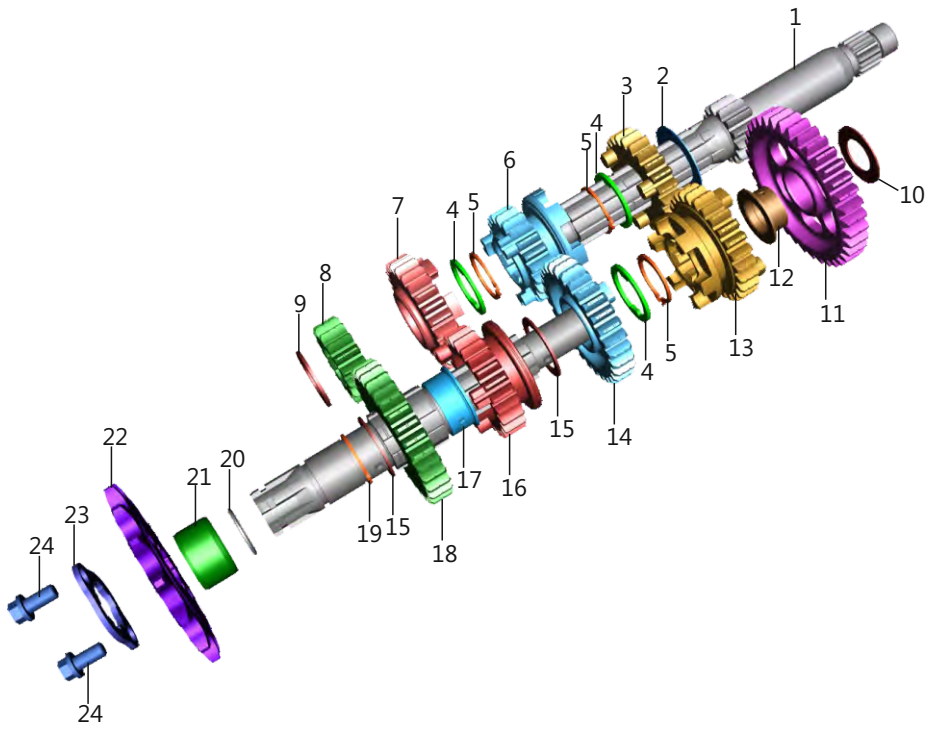

No.	Part No	Description	Qty	Remarks
1	DK 1014 71	Shaft Input Transmission	1	
2	39 2158 11	Plain Washer	1	
3	DK 1011 03	Gear 4th Drive	1	
4	DH 1010 79	Washer Spline	3	
5	DH 1012 35	Circlip Ext	4	
6	DK 1011 02	Gear 3rd Drive	1	
7	DK 1011 04	Gear 5th Drive	1	
8	DH 1010 84	Gear 2nd Drive	1	
9	39 2160 11	Plain Washer	1	
10	39 2159 11	Plain Washer	1	
11	DK 1017 17	Gear 1st Driven	1	
12	DH 1011 11	Bush 1st Driven	1	
13	DK 1017 18	Gear 4th Driven	1	
14	DK 1011 05	Gear 3rd Driven	1	
15	39 2159 11	Washer Plain	2	
16	DK 1017 21	Gear 5th Driven	1	
17	DH 1013 19	Bush 2nd Driven	1	
18	DK 1017 19	Gear 2nd Driven	1	
19	DK 1011 44	Shaft Output Transmission	1	
20	DK 1013 52	O-Ring Sprocket Collar	1	
21	DK 1012 45	Collar Sprocket	1	
22	DV 1010 48	Sprocket Drive	1	
23	DJ 1013 12	Plate - Drive Sprocket	1	
24	39 1062 04	Bolt Flanged Small	2	

Change Drum / Shaft Fork

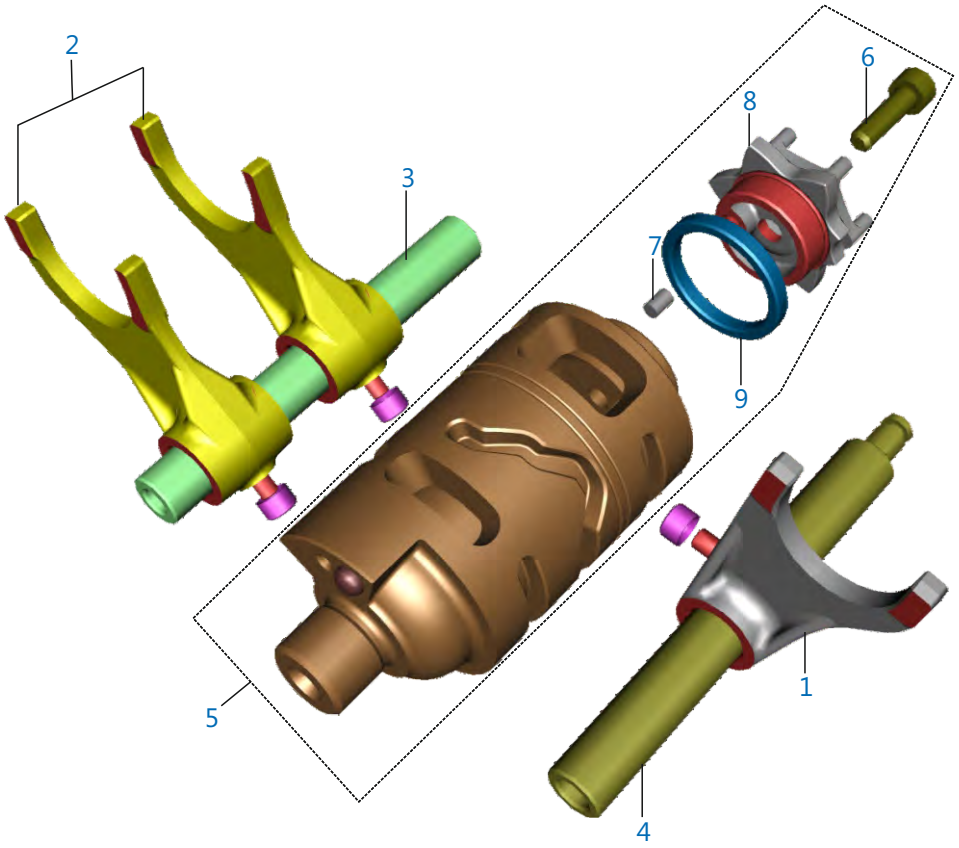

No.	Part No	Description	Qty	Remarks
1	DK 1011 59	Fork Gear Shift Input	1	
2	DK 1011 60	Fork Gear Shift Output	1	
3	DH 1011 46	Shift Gear Shift Fork	1	
4	DH 1014 93	Shaft Gear Fork Shift	1	
5	DK 1019 57	Drum Assembly Gear Shift	1	
6	DH 1013 89	Precoated Pan Screw M6 X 20	1	
7	KH DA04 08	Pin Dowel	1	
8	DH 1021 89	Guide Gear Shift	1	
9	DH 1014 96	Spacer	1	
10	DK 1011 35	Bush Fork Gear Shift	3	

THE WORLD'S FAVOURITE INDIAN

Gear Change Mechanism

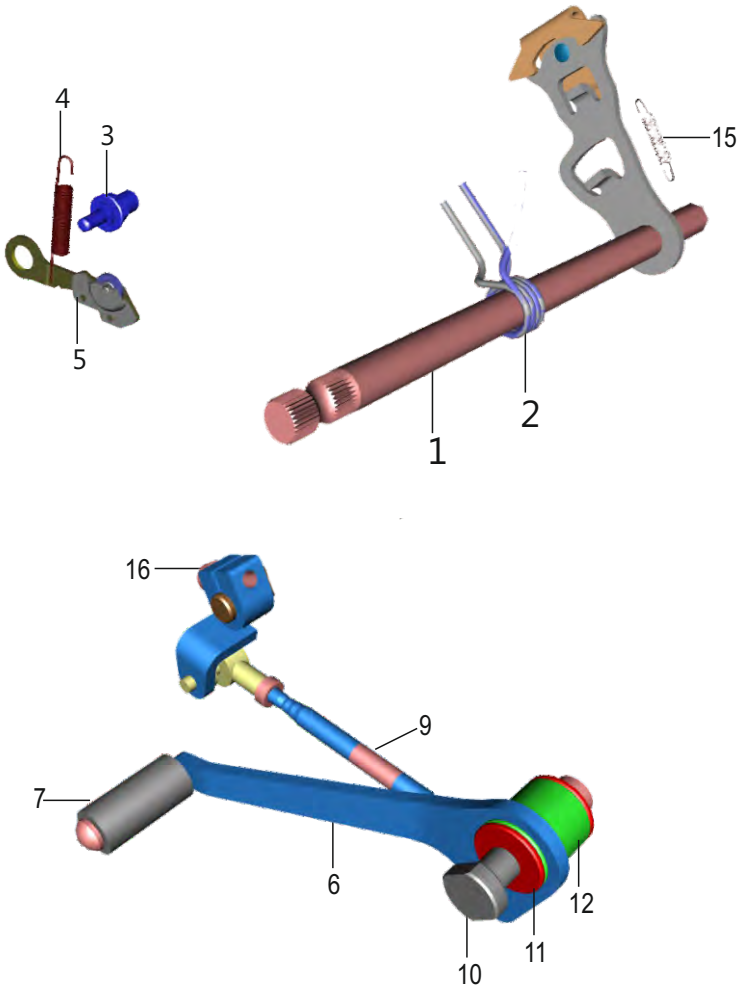

No.	Part No	Description	Qty	Remarks
1	DK 1017 33	Assembly Lever Shaft	1	
2	DK 1017 22	Spring Shift Return	1	
3	DH 1013 93	Bolt Gear Shift Drum Stopper	1	
4	DK 1012 53	Spring Stopper Drum	1	
5	DK 1017 25	Stopper Drum	1	
6	DK 1011 82	Assembly Lever Complete Change	1	
7	DT 5612 05	Damper	1	
8	KA DD06 22	Bolt-Flange-kad St-d Dia-06 L-22	1	N.I.
9	DK 1011 80	Assembly Tie Rod	1	
10	DK 1011 86	Bolt Pivot Lever Change	1	
11	DK 1011 85	Washer Pivot Bolt	2	
12	DK 1011 87	Collar Pivot Bolt	1	
13	39 1998 19	Seal - Oil	2	N.I.
14	39 2383 15	Nut - Hexagon With Flange - M8	1	N.I.
15	DH 1017 14	Spring Arm Reset	1	N.I.
16	DK 1011 77	Assembly Lever Change Arm	1	

THE WORLD'S FAVOURITE INDIAN

Engine Assembly / Crankcase RH

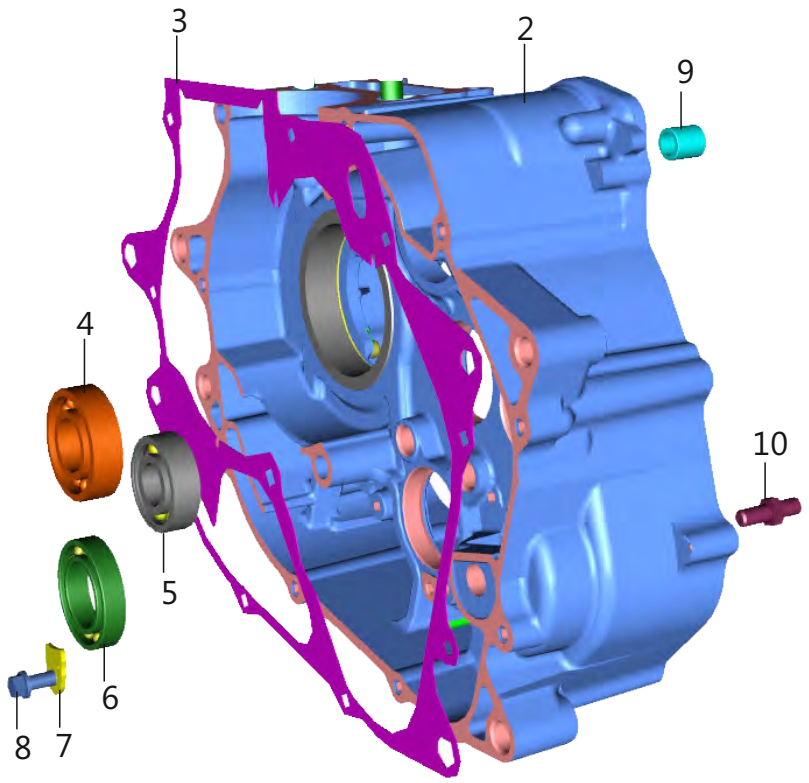

No.	Part No	Description	Qty	Remarks
1	DJ 1018 22	Engine Assembly	1	N.I.
2	52 DJ17 83	Crankcase RH (DJ101782)	1	
3	DH 1018 96	Gasket Crankcase	1	
4	KP AF60 04	Bearing Ball-Ord Clearance & Hn3	1	
5	59 2000 06	Bearing Ball (For Output Shaft)	1	
6	39 2601 20	Ball Bearing	1	
7	DH 1014 87	Plate Stopper	1	
8	AA 1014 37	Bolt Flanged Small	1	
9	39 2152 20	Needle Roller Bearing	1	
10	DH 1013 94	Bolt Shift Change	1	

THE WORLD'S FAVOURITE INDIAN

Crankcase LH

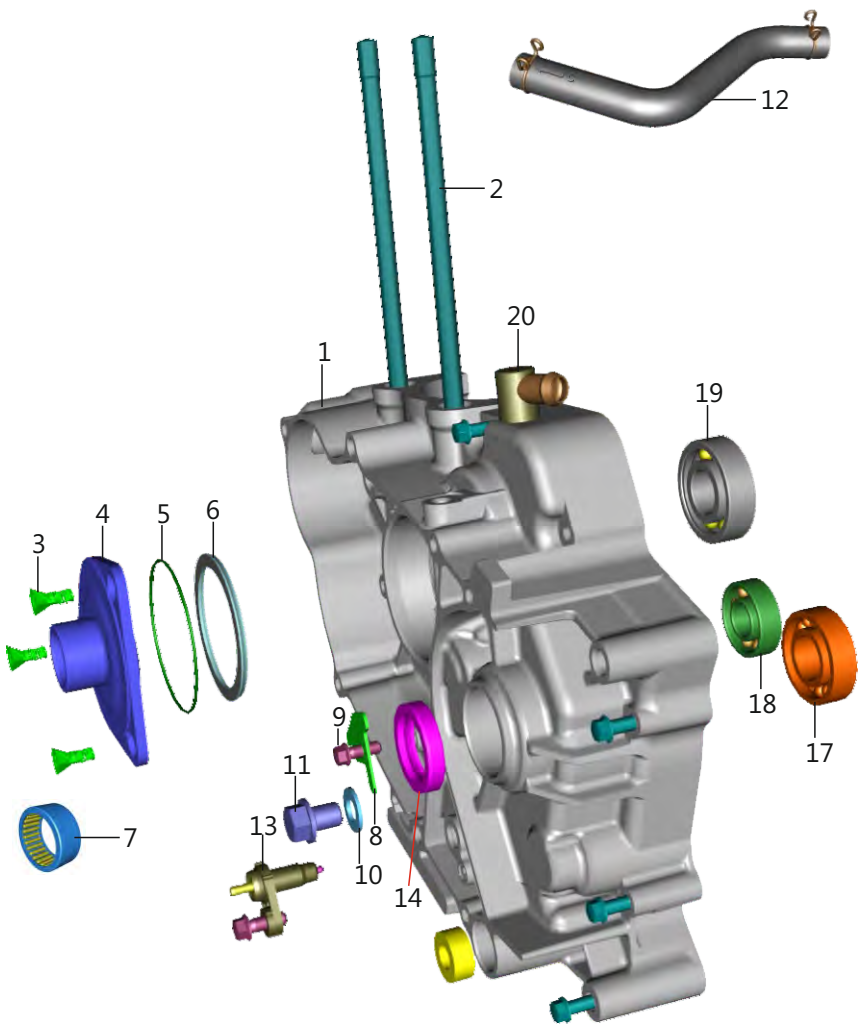

No.	Part No	Description	Qty	Remarks
1	52 PD10 52	Crankcase LH (PD541109)	1	
2	59 0500 08	Stud M10	2	
3	39 0752 01	Screw	3	
4	DH 1022 00	Guide Starter Assembly	1	
5	59 2100 06	O-Ring	1	
6	DJ 1017 05	Damper Crankshaft	1	
7	59 2000 07	Bearing - Needle Roller(30*37*16)	1	
8	DH 1015 81	Plate Starter Clutch Gear Return	1	
9	LA E000 42	Bolt Flanged-M6x1	2	
10	DG 1014 98	Gasket	1	
11	DU 1012 23	Plug Drain (Magnetic)	1	
12	DH 1017 19	Rubber Tube	1	
13	DK 1013 80	Neutral Switch Complete	1	
14	DG 1014 56	Oil Seal	1	
15	39 2190 19	Oil Seal	1	
16	39 1677 04	Flange Bolt	8	
17	39 2583 20	Bearing Ball	1	
18	39 2603 20	Bearing Ball	1	
19	59 2000 29	Bearing Ball Balancer	1	
20	DH 1012 03	Breather Pipe	1	

THE WORLD'S FAVOURITE INDIAN

Clutch Cover

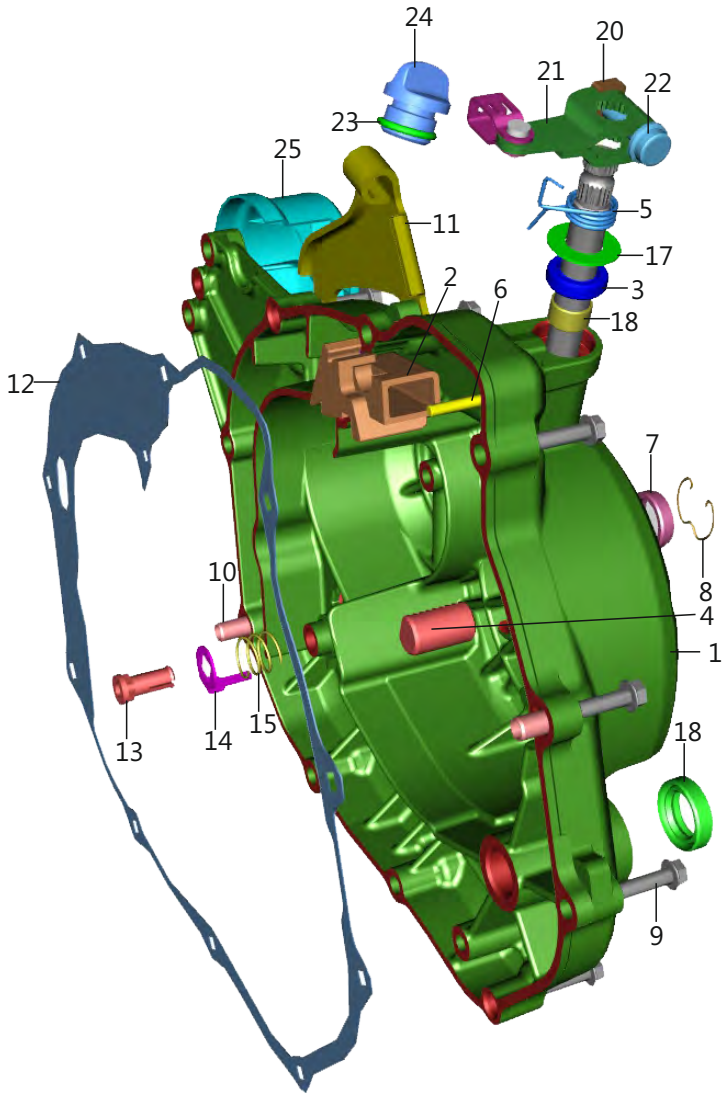

No.	Part No	Description	Qty	Remarks
1	36 PD00 12	Kit Assembly Clutch Cover-A102	1	
2	DH 1011 97	Grommet Breather	1	
3	39 1041 19	Oil Seal	1	
4	DH 1011 41	Rack	1	
5	DH 1011 42	Shaft Clutch Release	1	
6	DK 1012 51	Parallel pin	1	
7	DG 1014 18	Gauge	1	
8	DS 1012 15	Wire Circlip	1	
9	LA E000 18	Bolt Flanged M6x1x30l-precoated	10	
10	39 0999 06	Pin Dowel	2	
11	PD 5412 80	Bracket Cable Clutch	1	
12	DH 1011 54	Gasket Cover RH	1	
13	DK 1014 80	Plunger Oil	1	
14	DH 1210 11	Plate Plunger Oil	1	
15	DH 1210 12	Spring Joint 'A'	1	
16	DH 1015 44	Spring Torsion Clutch Lever	1	
17	39 2443 11	Washer	1	
18	39 1041 19	Seal Oil	4	
19	DK 1017 38	Decal Clutch Cover	1	
20	DH 1012 75	Nut Special	1	
21	PD 5412 79	Lever Assembly Clutch	1	
22	KA ED06 25	Bolt-Flange-kae St-d Dia-06 L-25	1	
23	DH 1011 52	O-Ring	1	
24	DS 1010 71	Cap Oil Filter	1	
25	56 DJ4E 1Y	Cover Motor Starter (DH102309)	1	

Magneto Cover Assembly

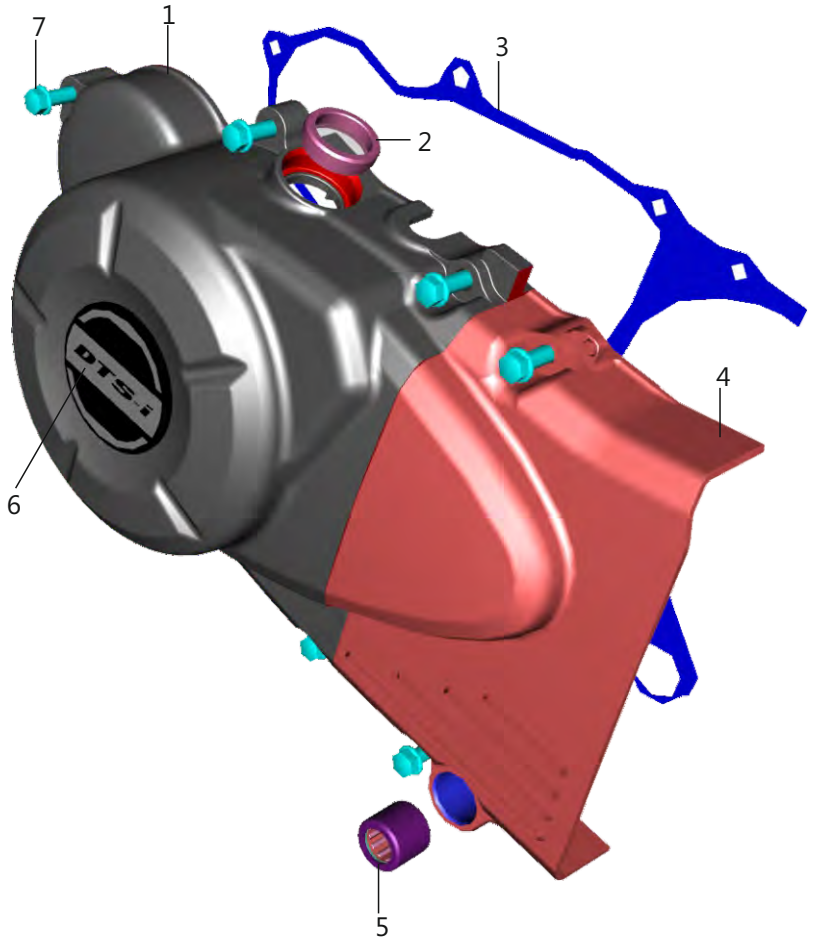

No.	Part No	Description	Qty	Remarks
1	52 PD10 45	Assembly Cover Magneto	1	
2	DG 1014 18	Gauge	1	
3	PD 5412 91	Gasket Cover Magneto	1	
4	56 DK9D 1Y	Cover LH Rear Matt Slate Gray	1	
5	AP 1010 43	Bearing Needle Bendix	1	
6	DK 1017 38	Decal Cover RH	1	
7	39 1074 04	Bolt - Flanged :- Small	7	
8	DJ 1612 28	Label Gear Shift-Black	1	N.I.

THE WORLD'S FAVOURITE INDIAN

Clutch Assembly

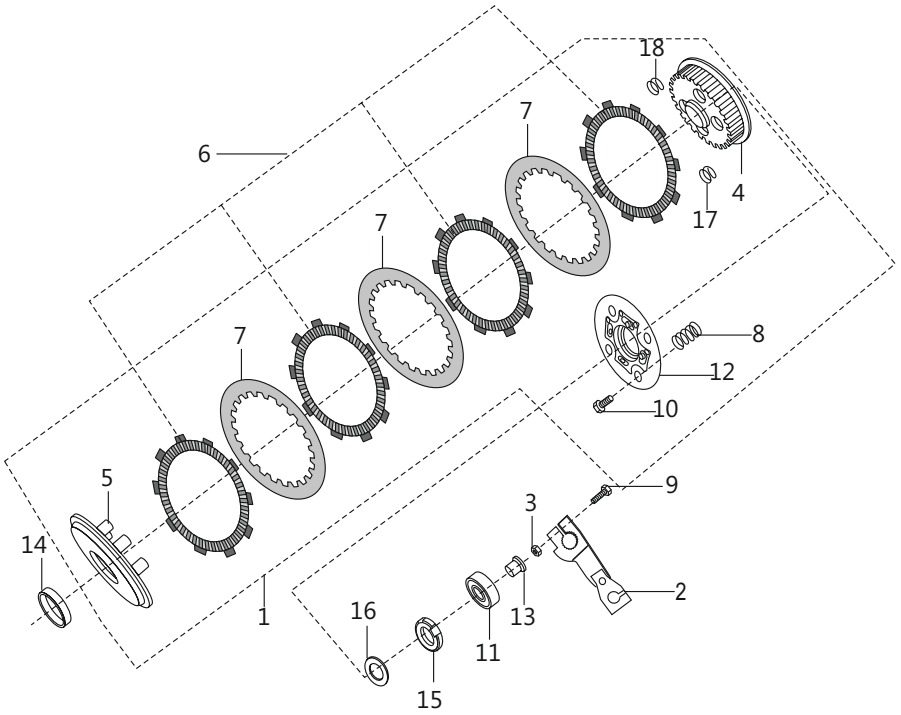

No.	Part No	Description	Qty	Remarks
1	DJ 1013 50	Clutch Assembly	1	
2	PD 5412 79	Lever Assembly Clutch	1	
3	DH 1012 75	Special Nut	1	
4	PD 5514 21	Clutch Center	1	
5	DK 1015 69	Plate Clutch Pressure	1	
6	36 PD01 07	Kit Friction Plate	1	
7	PD 5514 39	Plate Clutch Pressure Planished	5	
8	PD 5514 27	Spring Clutch Capacity	5	
9	KA ED06 25	Bolt-Flange-kae St-d Dia-06 L-25	1	
10	DK 1015 74	Bolt	5	
11	39 1990 20	Bearing - Needle	2	
12	DK 1015 73	Holder Clutch	1	
13	DK 1010 72	Rod Clutch Lifter	1	
14	DK 1011 26	Spacer Clutch	1	
15	DH 1016 48	Nut Primary Drive Lock	1	
16	39 2200 11	Washer Primary Drive Gear	1	
17	DK 1015 70	Seat Judder Spring	2	
18	DK 1015 71	Spring Judder	2	

Throttle Body Assembly

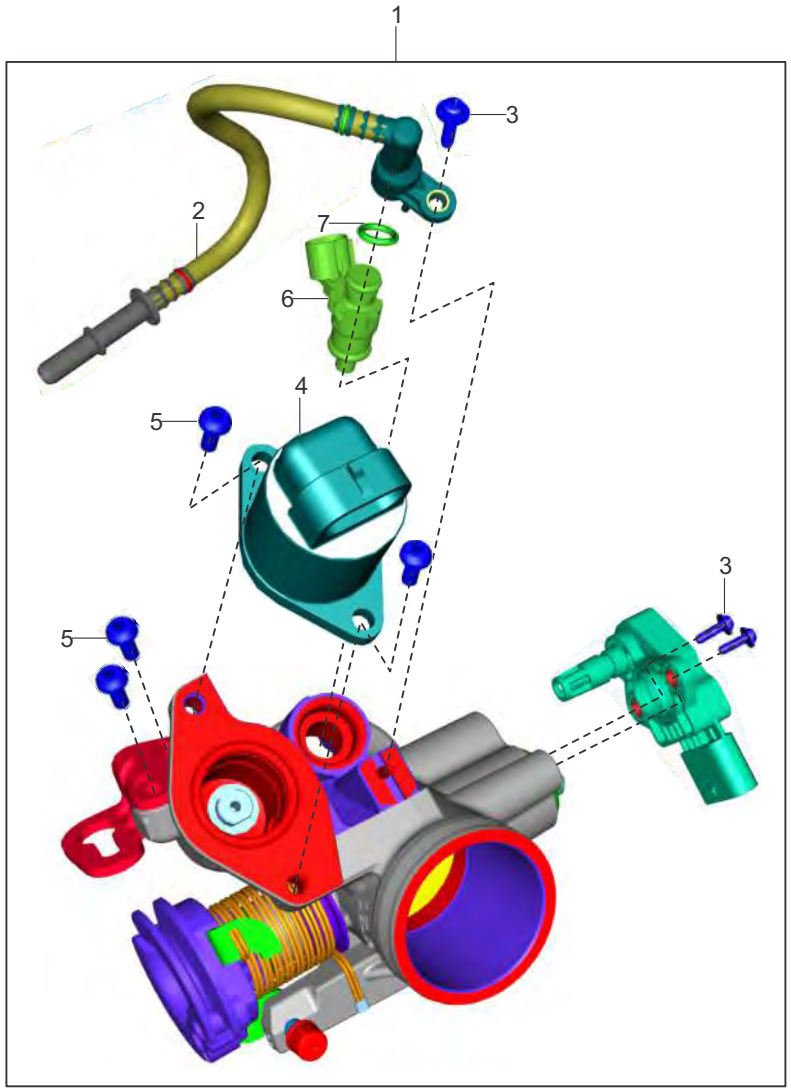

No.	Part No	Description	Qty	Remarks
1	DJ 1211 56	Body Throttle Assembly	1	
2	DJ 1211 43	Cap Injector Connector Quick	1	
3	JG 5814 23	Fixing Screw - M4 x 13	3	
4	JG 6112 06	Motor Stepper (IACV)	1	
5	JG 5814 24	Fixing Screw M5 x 12	4	
6	DJ 1211 42	Injector	1	

THE WORLD'S FAVOURITE INDIAN

Air Filter Assembly

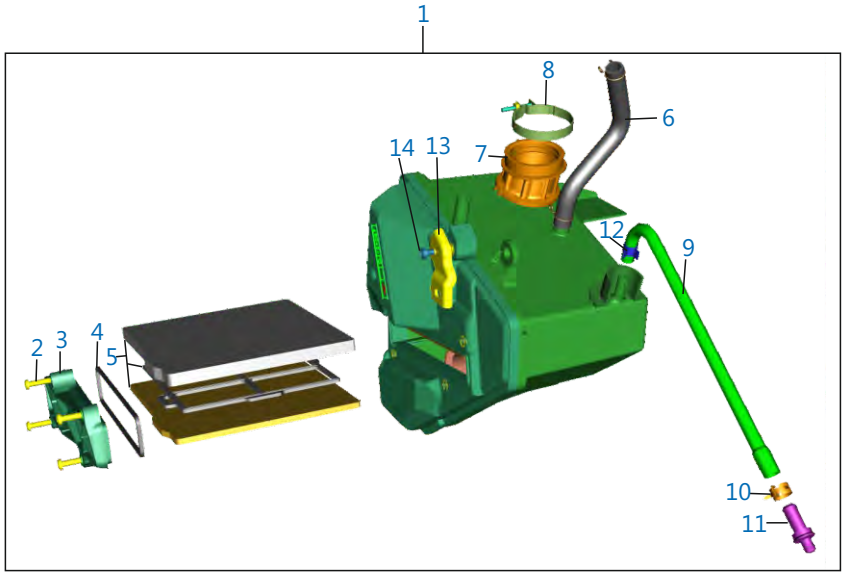

No.	Part No	Description	Qty	Remarks
1	DJ 1211 39	Filter Assembly Air	1	
2	KB BA05 25	Screw Pan Cross	5	
3	DJ 1210 82	Cartridge Assembly	1	
4	DK 1210 15	O-Ring	1	
5	DK 1018 98	Element Assembly Filter Air	1	
6	DH 1024 57	Pipe Assembly Breather	1	
7	DJ 1211 37	Tube Connecting	1	
8	JG 5810 76	Clamp	1	
9	DS 1211 17	Tube Drain	1	
10	DG 1210 02	Clamp	1	
11	DS 1211 26	Plug	1	
12	AA 1410 48	Spring Band Clip	1	
13	DH 1614 16	Bracket Lock	1	
14	KB BA05 08	Screw Pan Cross	1	
15	DS 1211 16	Duct	1	N.I.

THE WORLD'S FAVOURITE INDIAN

Silencer Assembly

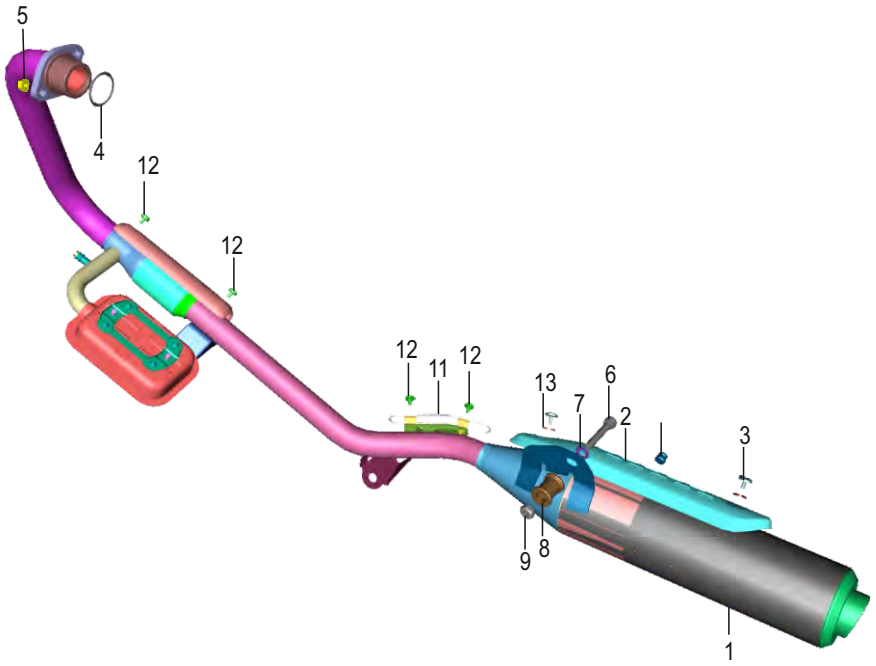

No.	Part No	Description	Qty	Remarks
1	DJ 1018 25	Silencer Assembly	1	
2	DH 1023 49	Shield Muffler	1	
3	JW 5910 28	Screw Truss	2	
4	AZ 5910 64	Gasket Exhaust	1	
5	39 1970 15	Flanged Nut	2	
6	DK 1013 14	Bolt Socket Head	1	
7	KD BA10 22	Washer Plain	1	
8	DH 1611 55	Damper Silencer	1	
9	DD 1610 71	U Nut	1	
10	DG 1611 24	Damper (Main Stand)	1	
11	DH 1023 51	Shield Wire	1	
12	DH 1016 07	Truss Screw	4	
13	JB 5910 68	Washer Nylon Shield	2	

THE WORLD'S FAVOURITE INDIAN

Seat Assembly & Seat Lock

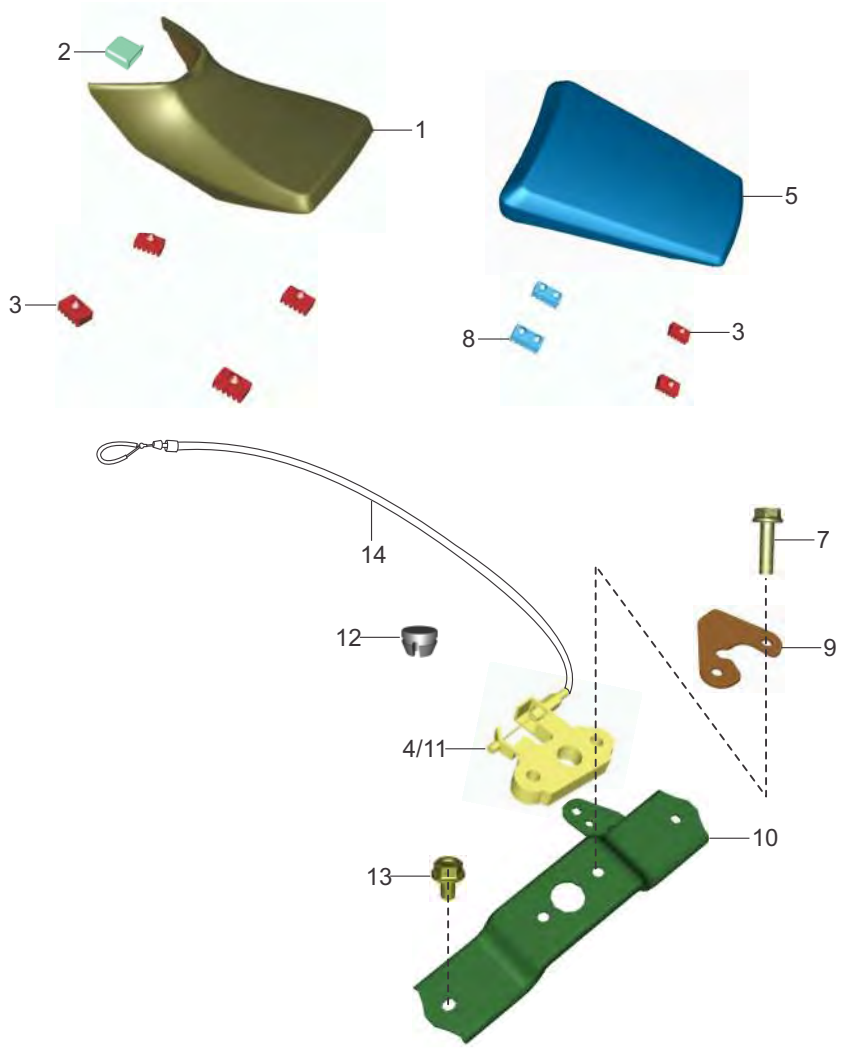

No.	Part No	Description	Qty	Remarks
1	DK 2110 12	Seat Assembly Complete Front	1	
2	DK 2110 07	Damper Seat Front	1	
3	DK 2110 09	Damper For Seat	6	
4	DH 1610 46	Lock Assembly Seat Front	1	
5	DK 2110 14	Seat Assembly Complete Rear	1	
6	DD 2110 03	Bracket Lock	1	
7	KA DD06 22	Bolt Flanged	2	
8	DS 2110 04	Damper Seat I	2	
9	DH 1612 33	Reinf. Seat Lock	1	
10	DK 1614 76	Bracket Latch Seat	1	For Rider Seat
11	DK 2110 08	Lock Assembly Rear Seat	1	
12	DS 1611 56	Plug Seat Lock Cable	2	
13	KA DD06 10	Bolt Flanged	2	
14	DH 2110 19	Cable Latch Seat	1	

THE WORLD'S FAVOURITE INDIAN

Oil Pump Assembly

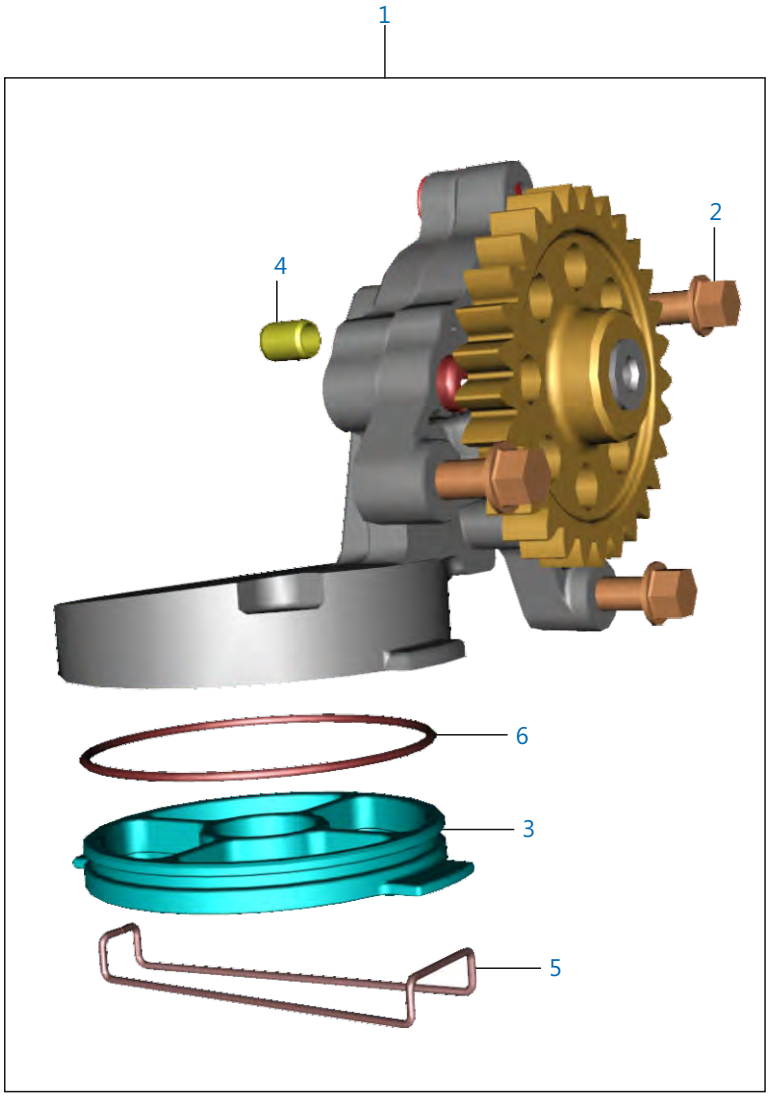

No.	Part No	Description	Qty	Remarks
1	52 DH01 69	Oil Pump Assembly	1	
2	KA ED06 25	Bolt-Flange-kae St-d Dia-06 L-25	3	
3	DH 1210 10	Mesh Filter Oil Pump	1	
4	39 1686 06	Hollow Dowel Pin	1	
5	DH 1210 35	Clip Mesh Oil Filter	1	
6	39 2194 21	'O' Ring	1	

THE WORLD'S FAVOURITE INDIAN

Magneto, ECU & H.T. Coil

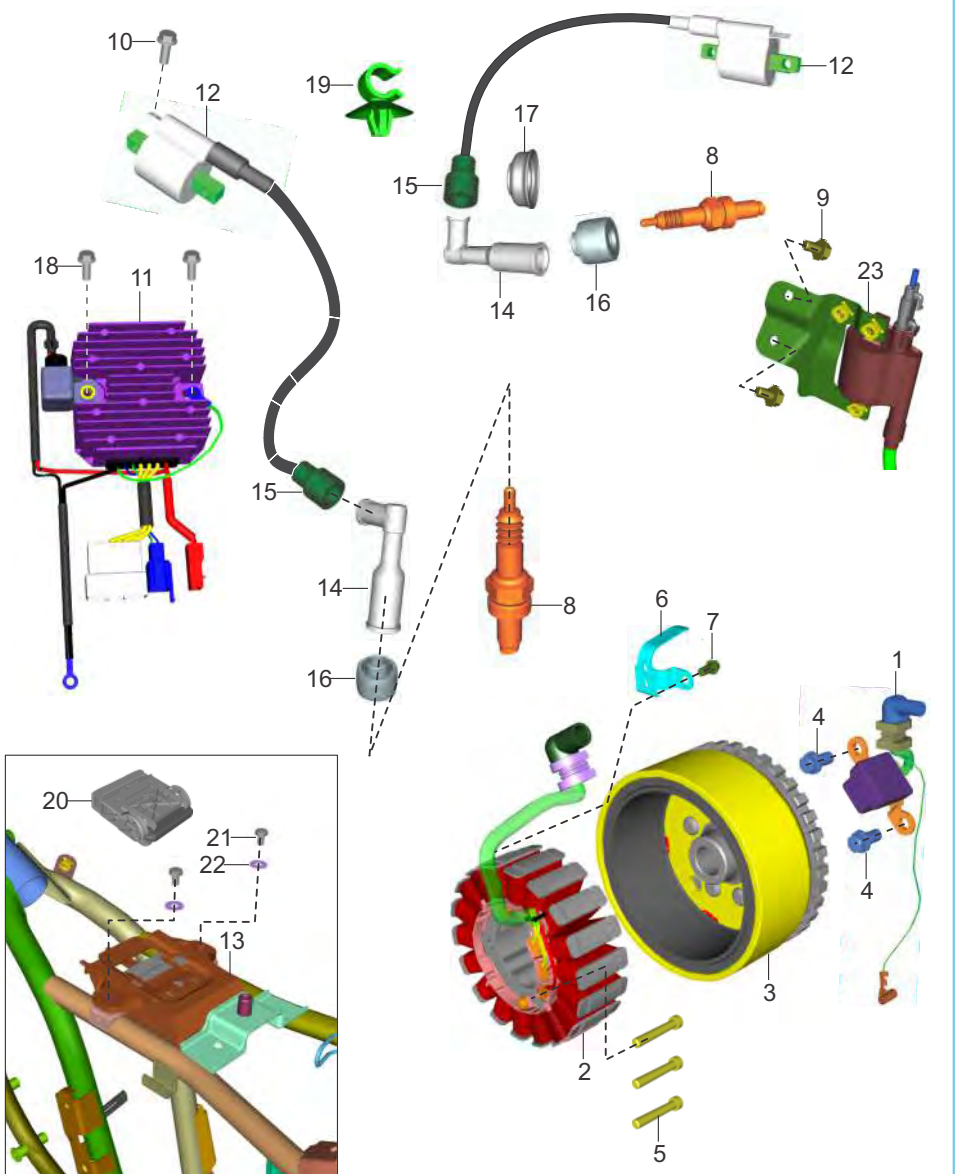

No.	Part No	Description	Qty	Remarks
1	DH 1024 62	Sensor Assembly Pick Up	1	
2	DH 1111 22	Stator Assembly Complete	1	
3	DH 1111 23	Rotor Assembly Complete	1	
4	AA 1014 37	Screw Pre Coated	2	
5	DK 1012 84	Bolt Socket - M5 x 0.8 x L34	3	
6	PD 5412 92	Bracket Harness Stator	1	
7	LA E000 14	Bolt Flanged M5 x 10	1	
8	DG 1110 08	Spark Plug	2	
9	KA DD06 10	Bolt Flanged	2	
10	KA DD06 18	Flange Bolt	4	
11	JF 4020 06	Regulator	1	
12	JL 3512 40	H.T. Coil LH With Cable	2	
13	DH 1617 31	Holder ECU	1	
14	DH 1110 15	Cap Spark Plug	2	
15	DD 1110 12	Grommet H.T. Cable	2	
16	DH 1110 13	Grommet Spark Plug	2	
17	DH 1110 16	Grommet Sleeve Spark Plug	1	
18	KA DD06 25	Bolt Flanged	2	
19	AA 1111 41	Clip H.T. Cable holding	1	
20	JP 3514 39	ECU EMS Assembly	1	
21	KA AA06 10	Bolt	2	
22	LD B000 23	Washer Plain	2	
23	DK 1615 04	Bracket Coil Ignition RH	2	

Starter Assembly

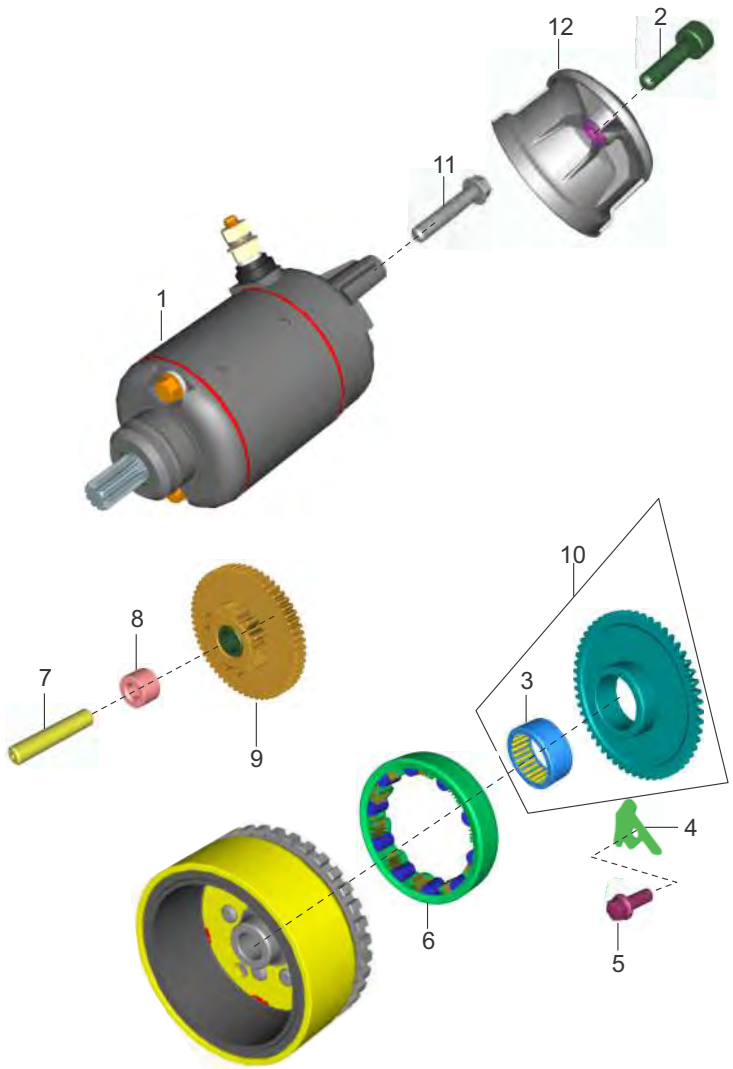

No.	Part No	Description	Qty	Remarks
1	DH 1111 14	Starter Motor Assembly - 325 W	1	
2	39 2285 01	Countersunk Head Screw	1	
3	59 2000 07	Needle Roller Bearing	1	
4	DH 1015 81	Plate Starter Clutch Gear Return	1	
5	DH 1013 85	Bolt	1	For Stopper Plate
6	PD 5514 53	Clutch One Way	1	
7	DK 1011 76	Shaft Starter Counter	1	
8	DH 1011 72	Collar Starter Counter	1	
9	JC 1011 45	Assembly Gear ST Counter (14T)	1	
10	PD 6212 03	Gear Assembly Clutch Starter	1	
11	LA E000 18	Bolt Flanged - M6 x 1 x 30L	2	
12	56 DJ4E 1Y	Cover Starter Motor	1	

THE WORLD'S FAVOURITE INDIAN

Engine Mountings

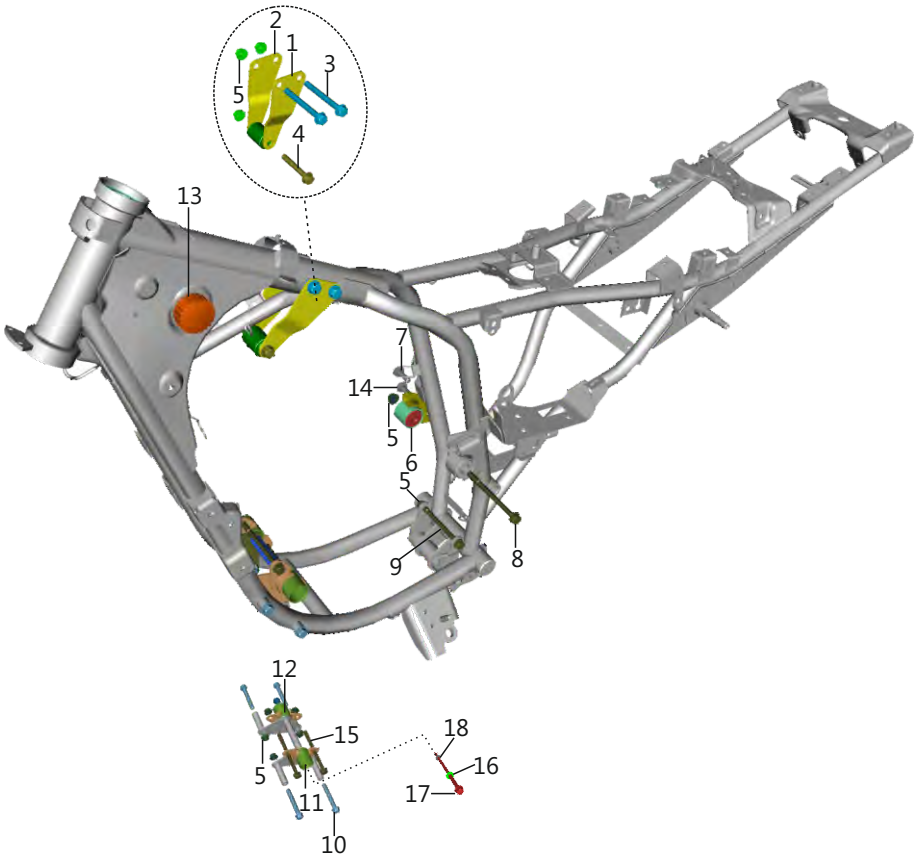

No.	Part No	Description	Qty	Remarks
1	DH 1617 78	Hanger Engine LH	1	
2	DH 1617 58	Hanger Engine RH	1	
3	KA AD08 60	Bolt-kaa St-d Dia-08 L-60	2	
4	KA DD08 60	Bolt-Flange-kad St-d Dia-08 L-60	1	
5	39 1970 15	Nut - Hexagon With Flange	11	
6	DK 1611 61	Bracket Complete RH Engine Rear	1	
7	KA CA08 20	Bolt-Socket-kac St-a Dia-08 L-20	1	
8	59 0400 41	Hex Hd Bolt / Flange	1	
9	KA DD08 A0	Bolt Flanged-M8x1.25xl100xbright	1	
10	KA DD08 65	Bolt-Flange-kad St-d Dia-08 L-65	4	
11	DK 1614 97	Hanger Assembly Engine Front LH	1	
12	DK 1614 98	Hanger Assembly Engine Front RH	1	
13	DJ 1410 08	Damper Front	2	
14	KA CA08 12	Bolt Master Kac	1	
15	KA DD08 C5	Bolt Flanged-m8x1.25xl 125xbrt	2	
16	39 1180 11	Washer - Plain	1	
17	59 0400 41	Bolt Flanged M8x1.25	1	
18	DH 1612 45	Nut - U :- M8 X 1.25	1	

Frame And Frame Fittings

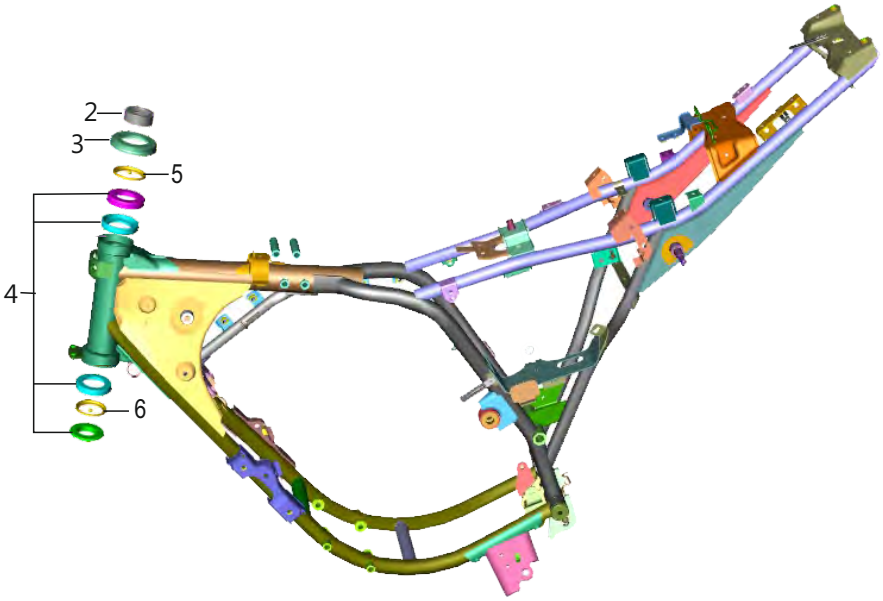

No.	Part No	Description	Qty	Remarks
1	DJ 1614 61	Frame Assembly	1	
2	DK 1810 75	Nut Steering	1	
3	DK 1810 76	Cup Steering	1	
4	36 DK01 59	Kit St.Cone With Grease	1	
5	DK 1810 50	Cage Steering Bearing Top	1	
6	DK 1810 51	Cage Steering Bearing Bottom	1	

THE WORLD'S FAVOURITE INDIAN

Swing Arm / Rear Shock Absorber

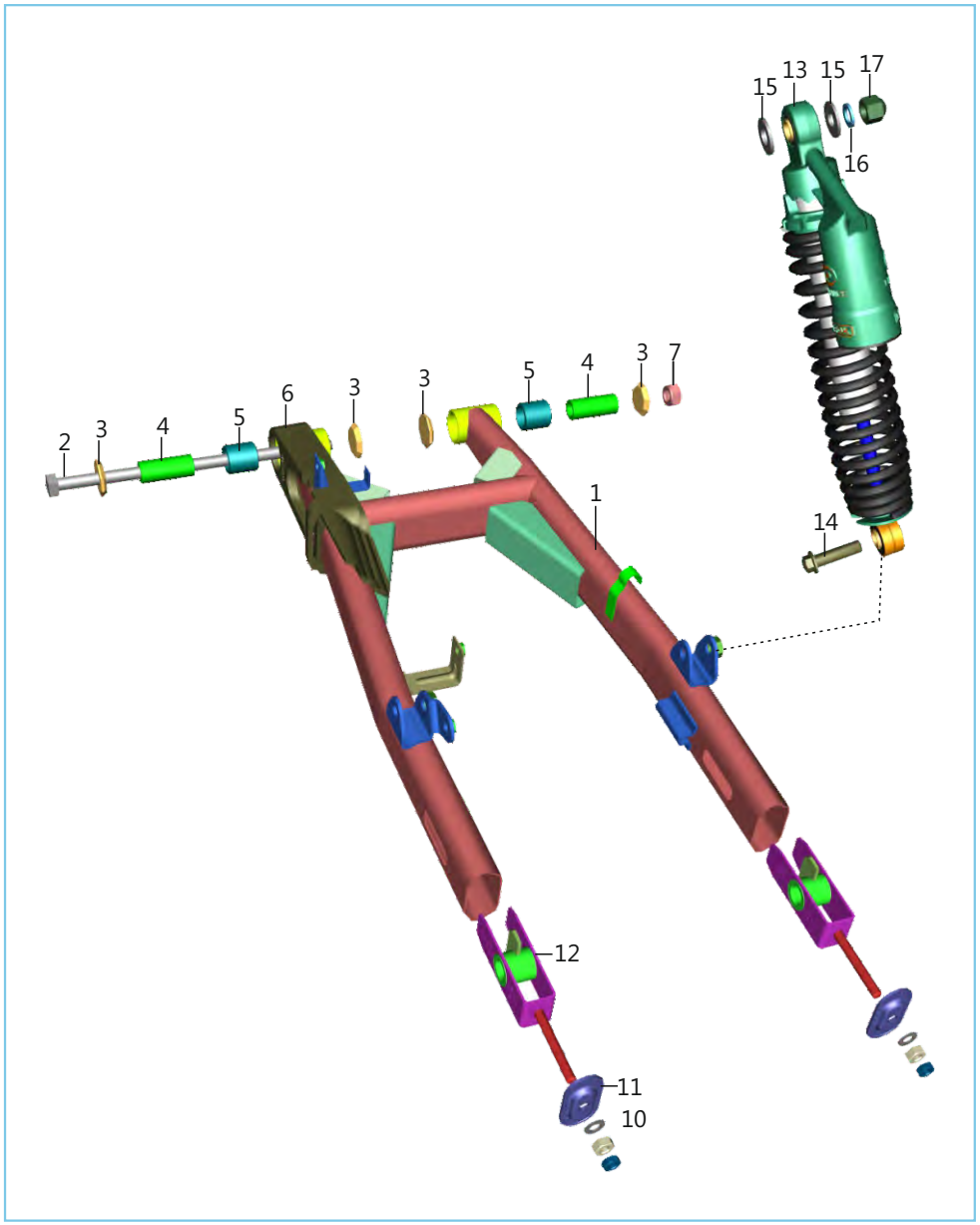

No.	Part No	Description	Qty	Remarks
1	DK 1710 08	Assembly Swing Arm	1	
2	DK 1710 03	Shaft Swing Arm	1	
3	DG 1710 19	Seal - Oil	4	
4	DK 1710 06	Sleeve For Swing Arm	2	
5	DG 1710 18	Bearing-Needle	2	
6	DG 1710 34	Guard	1	
7	DH 1710 19	U Nut Swing Arm	1	
8	DG 1710 22	Small Nut	2	
9	39 1997 15	Hexagon Nut	2	
10	22 1502 41	Washer - Plain	2	
11	JM 1710 04	Cap Chain Adjuster	2	
12	DJ 1710 44	Adjuster Chain	2	
13	DK 1710 14	Shock Absorber Rear	2	
14	DG 1710 38	Flanged Bolt	2	
15	39 0714 11	Washer Plain	4	
16	KD DB10 18	Washer Spring Thin	2	
17	39 2366 15	Domed Cap Nut - M12	2	

THE WORLD'S FAVOURITE INDIAN

Rider, Pillion Foot Rest & Step Holder

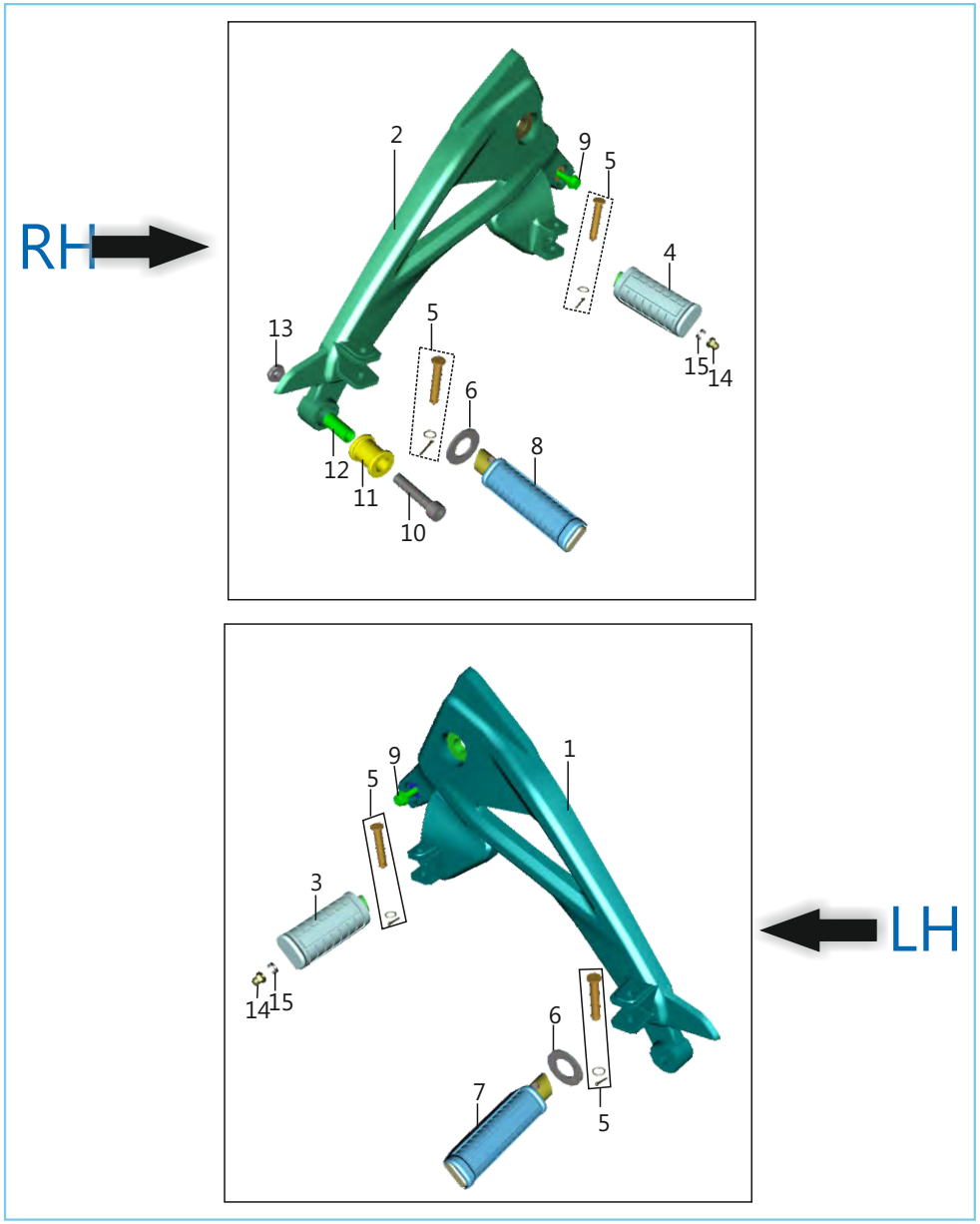

No.	Part No	Description	Qty	Remarks
1	56 DJ3X 1Y	Holder Step LH	1	
2	56 DJ3Y 1Y	Holder Step RH	1	
3	DJ 1611 26	Step Assembly - Main LH	1	
4	DJ 1611 27	Step Assembly - Main RH	1	
5	36 DK00 13	Kit Hardware Pillion	2	
6	DJ 1611 86	Plate Side Pillion Step	2	
7	DJ 1611 28	Step Assembly Complete - Pillion LH	1	
8	DJ 1611 29	Step Assembly Complete - Pillion RH	1	
9	39 1069 01	Screw - Hexagon Head	2	
10	DK 1013 14	Bolt Socket Head M10x50	1	
11	DH 1611 55	Damper Silencer	1	
12	DJ 1612 78	Tube Silencer With Washer	1	
13	DD 1610 71	Nut -U M10 X 1.25 X Height 6.5	1	
14	DJ 1612 85	Special Bolt Main Step	2	
15	DH 1611 00	Spacer - Main Step	2	

THE WORLD'S FAVOURITE INDIAN

Mudguard - Front & Rear

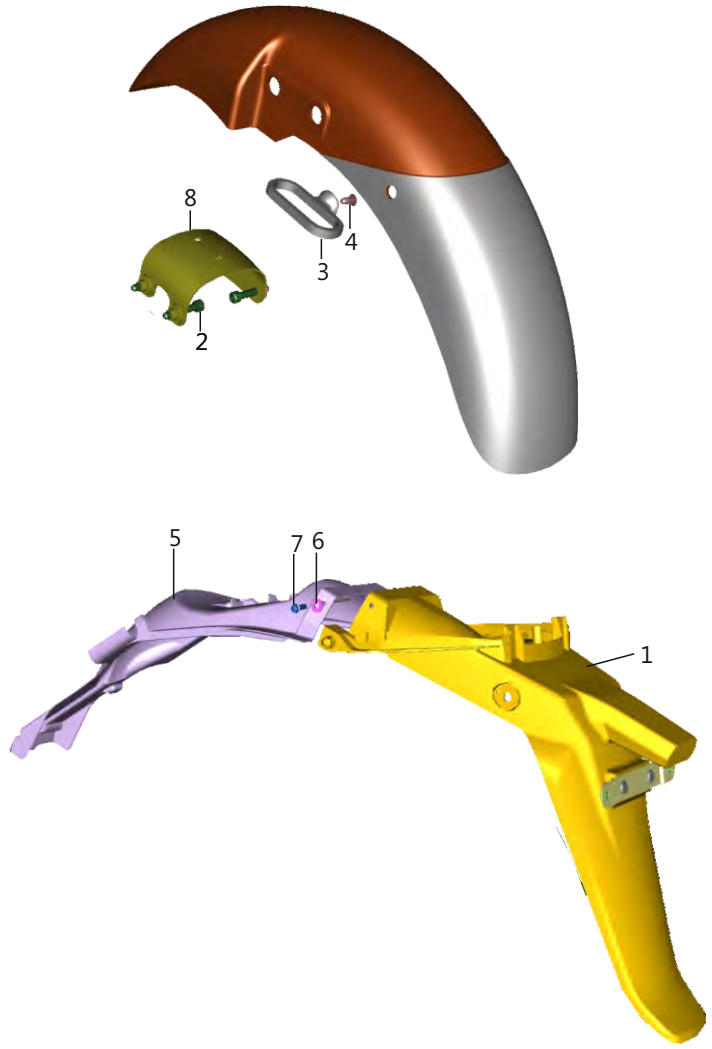

No.	Part No	Description	Qty	Remarks
1	DK 1610 85	Fender Rear	1	
2	KA AA08 18	Bolt-kaa St-a Dia-08 L-18	4	
3	DS 1611 25	Cable Guide	1	
4	DJ 1610 69	Nail For Cable Guide	1	
5	DK 1613 38	Fender Rear Front	1	
6	39 0711 11	Plain Washer	2	
7	KA ED06 20	Bolt-Flanged-Small	2	
8	DK 1610 98	Brace Fender	1	

THE WORLD'S FAVOURITE INDIAN

Stand Assembly

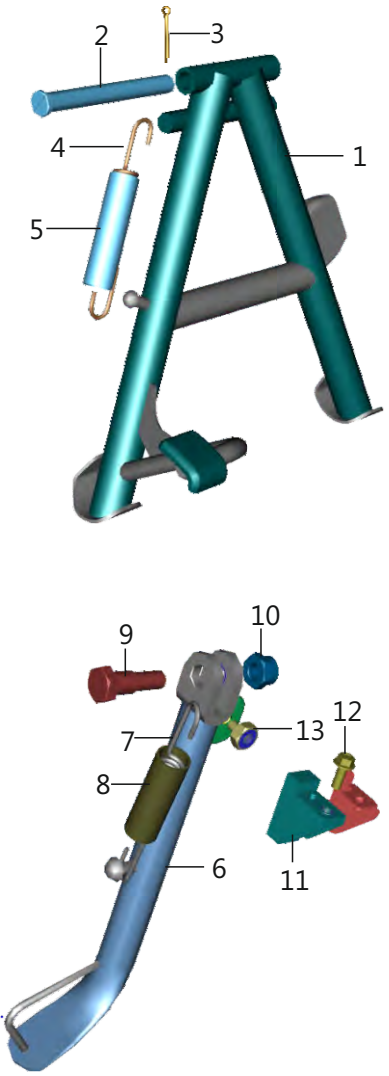

No.	Part No	Description	Qty	Remarks
1	DK 1611 22	Stand Main	1	
2	30 1611 57	Shaft Stand	1	
3	KH AA32 25	Pin Cotter	1	
4	DH 1611 21	Spring Main Stand	1	
5	DH 1611 45	Cover Spring Main Stand	1	
6	DK 1615 19	Stand Side	1	
7	DH 1610 66	Spring Side Stand	1	
8	DH 1611 46	Cover Spring Side Stand	1	
9	LA D002 31	Bolt Flange-M10x1.25xl39xblxstep	1	
10	LC H000 01	Nut Nyloc-M10x1.25xht.11xcl6xbrt	1	
11	JY 4014 08	Switch Side Stand My16	1	
12	KA DS05 16	Bolt Flange-M5x0.8xl16xcl4.8xblk	1	
13	JG 4014 11	Magnet Holder	1	

THE WORLD'S FAVOURITE INDIAN

Tube / Tyre / Rim

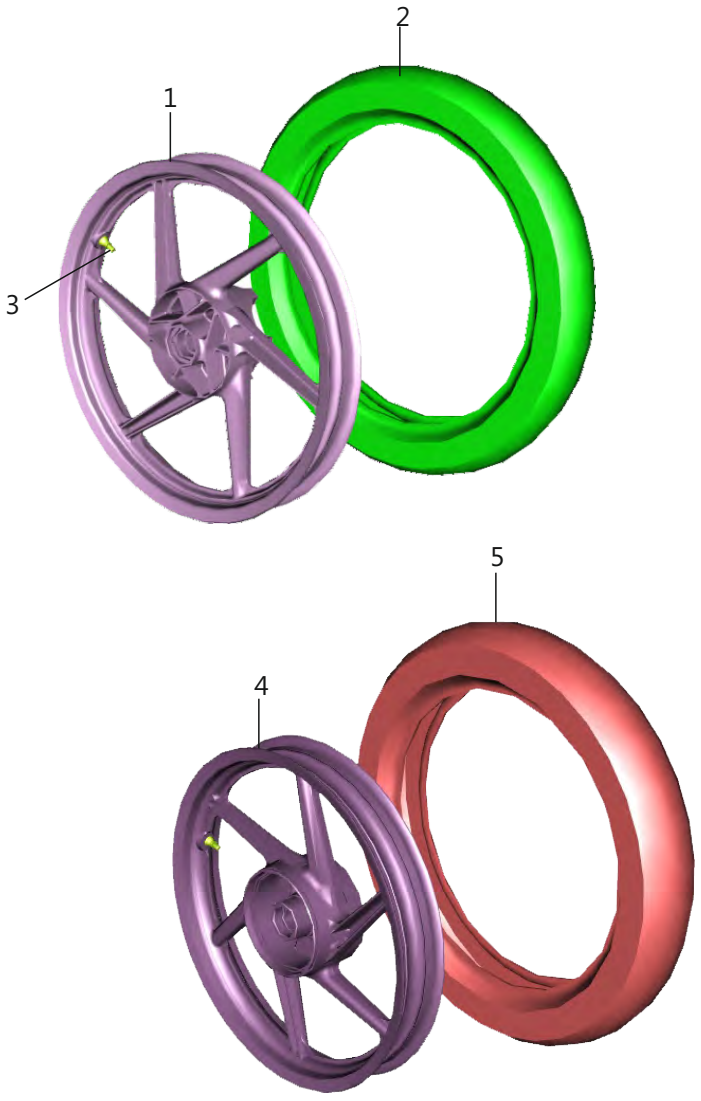

No.	Part No	Description	Qty	Remarks
1	JC 1510 13	Wheel Rim Front (1.6 X 17 DC)	1	
2	DK 1510 39	Tyre Front Tubeless	1	
3	DK 1510 26	Valve Tubeless Tyre	1	
4	DK 1510 50	Wheel Rim Rear	1	
5	DK 1510 40	Tyre Rear Tubless	1	

THE WORLD'S FAVOURITE INDIAN

Front Hub

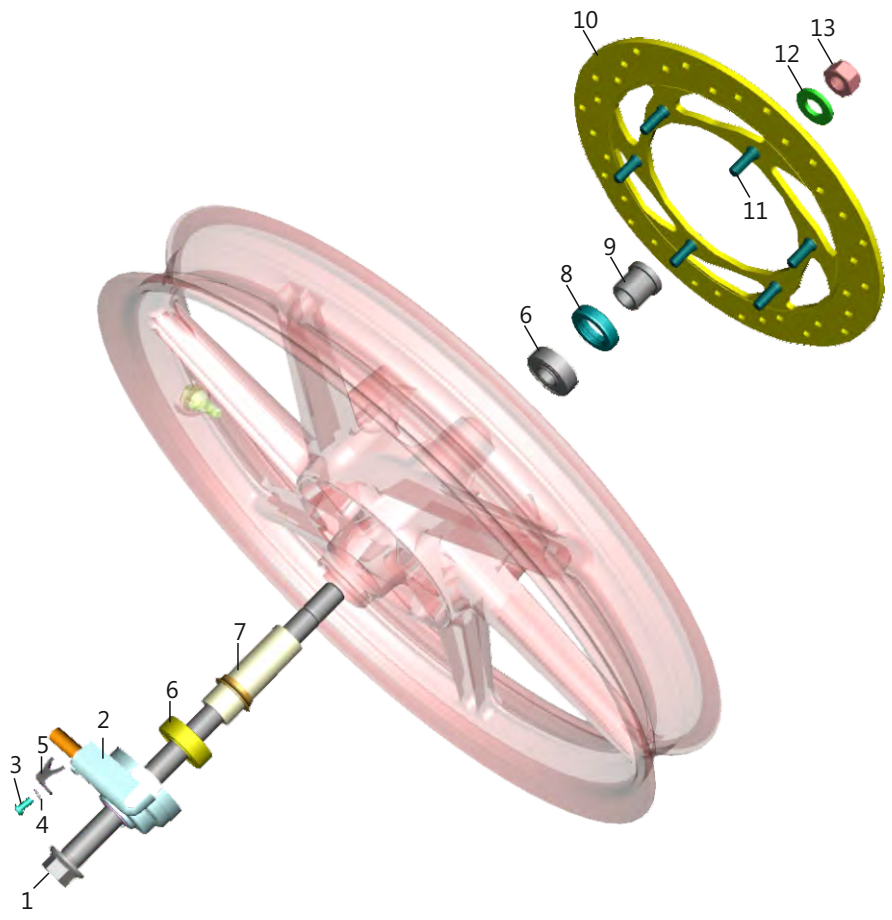

No.	Part No	Description	Qty	Remarks
1	DK 1510 95	Front Axle	1	
2	JC 1510 19	Vehicle Speed Sensor Assembly	1	
3	KB BA04 08	Screw Pan Cross	1	
4	39 0900 12	Washer Spring Thin	1	
5	JC 2010 46	Stopper Plate	1	
6	KP BC62 02	Bearing-Ball-C3 Clearance	2	
7	DK 1510 28	Spacer Front Wheel	1	
8	DG 1510 05	Seal-Oil	1	
9	DG 1510 07	Collar	1	
10	DK 1510 96	Disc Front Black	1	
11	JD 1318 11	Screw Socket Step M8x1.25	6	
12	DG 1510 08	Washer	1	
13	DH 1710 19	U Nut Swing Arm	1	

THE WORLD'S FAVOURITE INDIAN

Front Master Cylinder

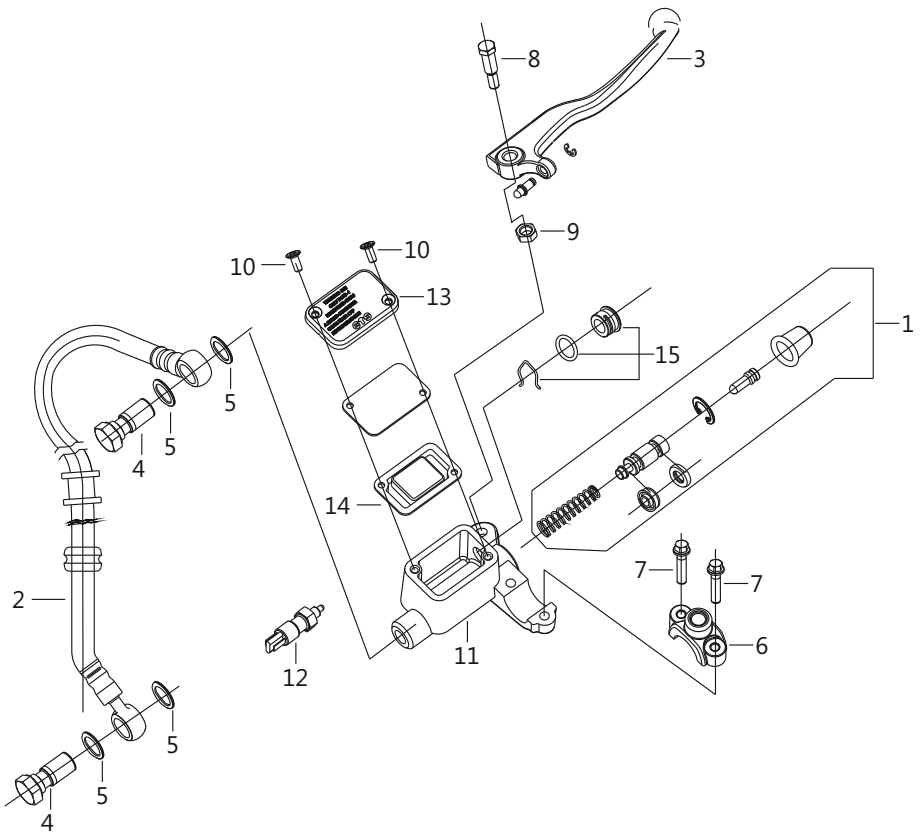

No.	Part No	Description	Qty	Remarks
1	DE 1910 43	Major Kit - Master Cylinder	1	
2	DJ 1511 14	Hose Assembly	1	
3	DJ 1910 57	Lever Grip RH	1	
4	DJ 1910 25	Banjo Bolt	2	
5	DJ 1910 26	Copper Washer	4	
6	DE 1910 33	Clamp Holder RH	1	
7	DJ 1910 28	Bolt	1	
8	DJ 1910 29	Bolt Front Brake Lever	1	
9	DJ 1910 30	Nut Flanged	1	
10	DE 1910 30	Screw	2	
11	DJ 1910 56	Cylinder Master	1	
12	DJ 2011 09	Front Brake Switch	1	
13	DE 1910 29	Reservoir Cover	1	
14	DE 1910 28	Diaphragm	1	
15	DE 1910 36	Oil Window Kit	1	

THE WORLD'S FAVOURITE INDIAN

Front Disc Brake

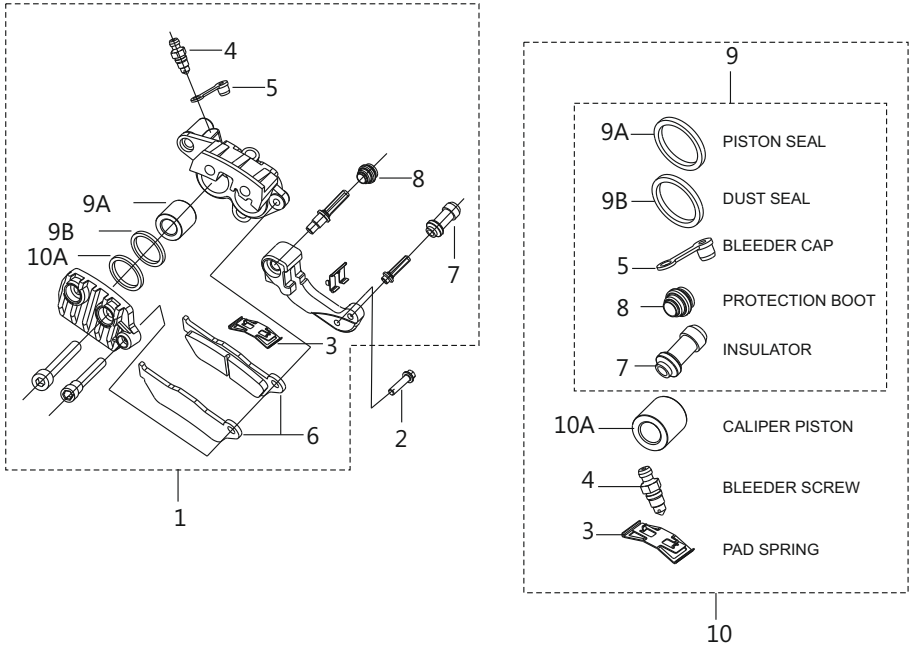

No.	Part No	Description	Qty	Remarks
1	PD 1318 53	Caliper Assembly Front	1	
2	59 0400 48	Bolt Flanged	2	
3	DE 1510 48	Spring Pad	1	
4	DE 1510 46	Bleeder Screw	1	
5	DE 1510 47	Bleeder Cap	1	
6	DE 1510 37	Disc Pad Set	1	
7	DE 1510 43	Insulator	1	
8	DJ 1510 73	Protection Boot	1	
9	DJ 1510 74	Minor Kit - Caliper	1	
10	DJ 1510 75	Major Kit - Caliper	1	

THE WORLD'S FAVOURITE INDIAN

Rear Hub

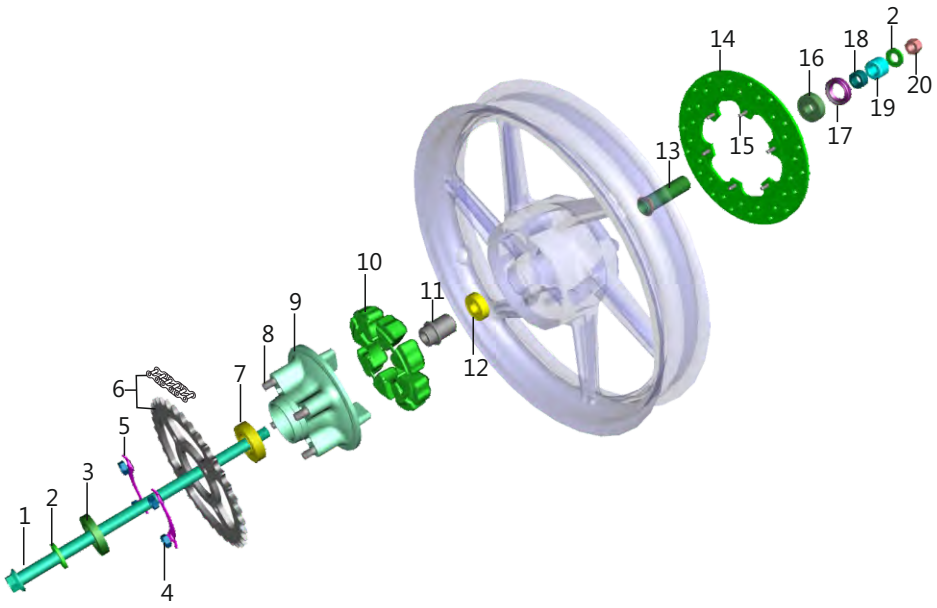

No.	Part No	Description	Qty	Remarks
1	DK 1510 09	Axle Rear	1	
2	DG 1510 08	Washer	2	
3	DK 1510 12	Seal Oil	1	
4	KC BK10 06	Nut Hex Thin-m10x1.25xht. 6xblk	4	
5	PF 1312 20	Washer Lock For Nut A/f17	2	
6	36 DK00 36	Chain Sprocket Kit	1	
7	KP AC60 05	Bearing Ball Ordinary Clearance	1	
8	DS 1510 73	Stud M10x1.25p Four Rubber	4	
9	JC 1510 16	Coupling (Black)	1	
10	JG 1312 19	Coupling Rubber	1	
11	DK 1510 15	Sleeve	1	
12	KP BC62 02	Bearing-Ball-C3 Clearance	1	
13	DK 1510 22	Collar Bearing Assembly	1	
14	DK 1510 97	Disc Brake Dia 230	1	
15	39 2038 04	Hexagon Socket Head Bolt-m6	6	
16	KP BC63 02	Bearing-Ball-C3 Clearance	1	
17	30 1510 82	Seal Oil	1	
18	DK 1510 82	Spacer II	1	
19	DK 1510 81	Spacer I	1	
20	DH 1710 19	U Nut Swing Arm	1	

Rear Disc Brake System

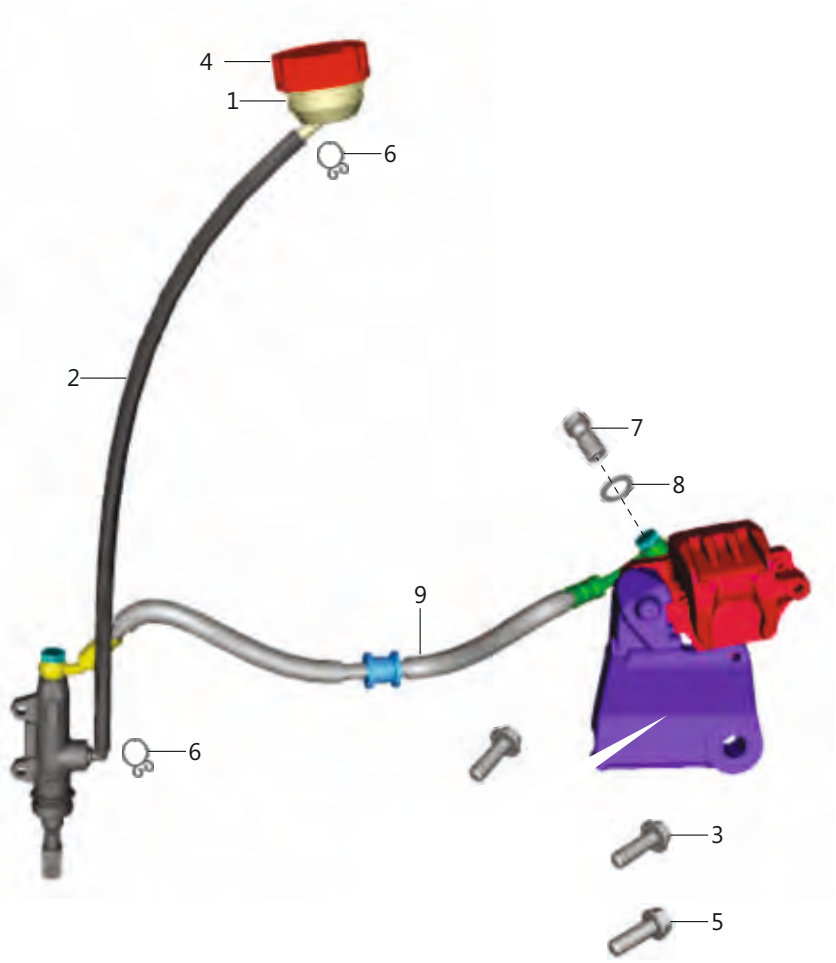

No.	Part No	Description	Qty	Remarks
1	JG 1318 21	Reservoir Rear Brake	1	
2	DK 1510 34	Reservoir Tube Rear Disc	1	
3	KA DF08 25	Bolt Flanged	2	
4	DK 1510 45	Reservoir Cap	1	
5	39 2481 04	Bolt Hexagon Head With Flange M8	1	
6	DK 1510 63	Clip For Reservoir Tube	2	
7	DJ 1910 25	Banjo Bolt	1	
8	DJ 1910 26	Copper Washer	1	
9	DK 1510 84	Hose Brake Rear	1	

THE WORLD'S FAVOURITE INDIAN

Rear Disc Brake - Master Cylinder & Caliper

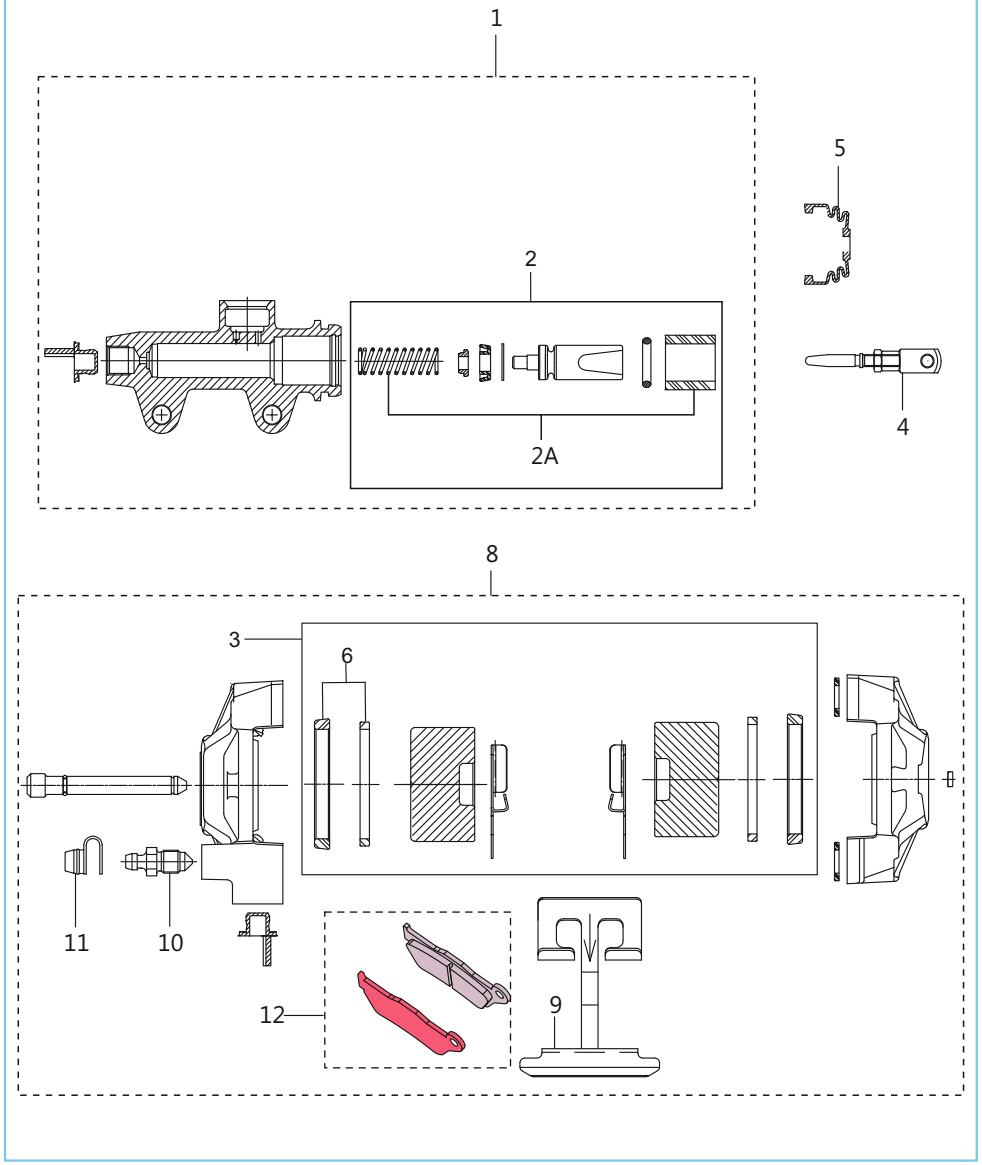

No.	Part No	Description	Qty	Remarks
1	DK 1510 31	Master Cylinder	1	
2	36 DK00 69	Major Kit Caliper	1	
2A	36 DK00 70	Minor Kit Caliper	1	
3	DK 1510 70	Kit Rear Caliper Major	1	
4	36 DK00 71	Push Rod	1	
5	DK 1510 42	Boot	1	
6	DK 1510 89	Kit Piston Seal (Minor Kit)	1	
7	DK 1510 90	Insulator Kit Floating Caliper	1	N.I.
8	DK 1511 22	Caliper Assembly Rear	1	
9	DK 1510 41	Spring Pad	1	
10	DE 1510 46	Bleeder Screw	1	
11	DE 1510 47	Bleeder Cap	1	
12	DK 1510 85	Disc Pad Set	1	
13	DK 1510 88	Piston Kit (Major Kit) Floating Caliper	1	

THE WORLD'S FAVOURITE INDIAN

Rear Brake Pedal

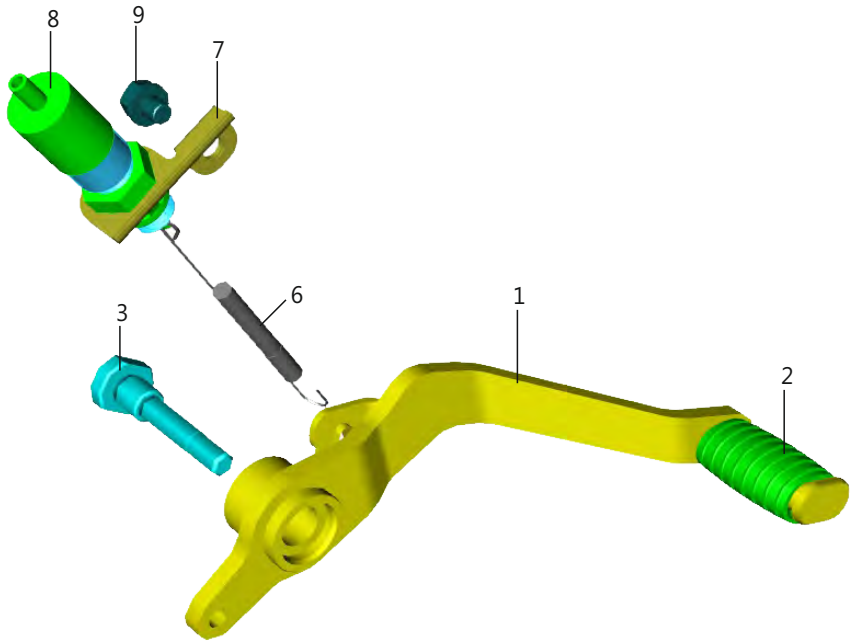

No.	Part No	Description	Qty	Remarks
1	DK 1910 42	Assembly Pedal Brake	1	
2	DG 1013 39	Damper	1	
3	DK 1011 86	Bolt Pivot Lever Change	1	
4	DK 1011 85	Washer Pivot Bolt	1	N.I.
5	DK 1011 87	Collar Pivot Bolt	1	N.I.
6	DK 1910 14	Spring Rear Brake Switch	1	
7	DK 1611 63	Bkt. Rear Brake Switch	1	
8	31 2010 79	Rear Brake Switch	1	
9	KA DA06 08	Bolt - Hexagon Socket Head :- M6	1	

THE WORLD'S FAVOURITE INDIAN

Handle Bar

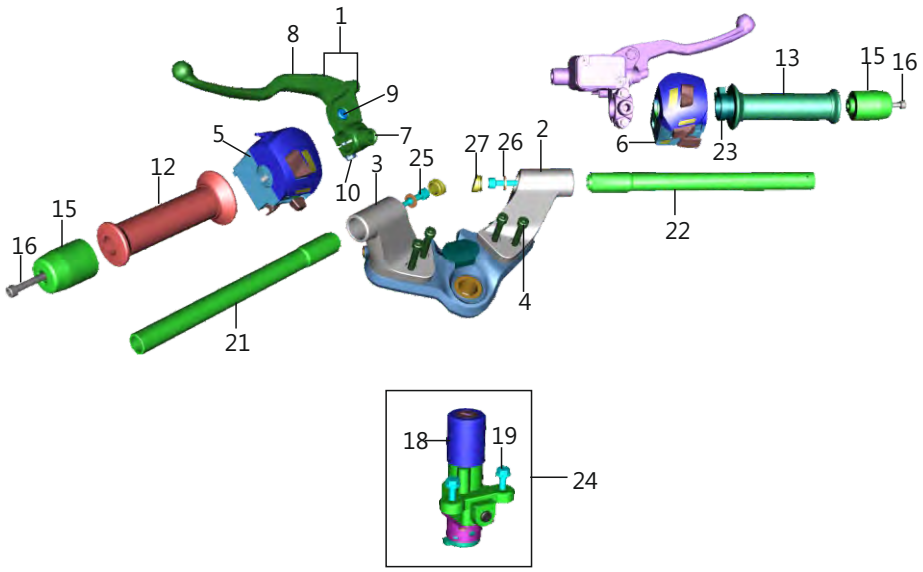

No.	Part No	Description	Qty	Remarks
1	DK 1910 46	Assembly Lever-Holder LH	1	
2	56 DK32 Y9	Handle Holder RH, Sprint Matt Black	1	
3	56 DK31 Y9	Handle Holder LH, Sprint Matt Black	1	
4	LA C000 59	Bolt Socket-M8x1.25xl 25xPrecoat	4	
5	DH 2011 11	Switch Control LH	1	
6	DH 2011 12	Switch Control RH	1	
7	DJ 1910 81	Holder LH	1	
8	DJ 1910 83	Lever Grip Left	1	
9	DL 1910 14	Stud Lever Handle	1	
10	39 1553 04	Bolt Flange M6	1	
11	36 DU19 01	Kit Adjusting Screw	1	N.I.
12	DH 1910 08	Hand Grip RH	1	
13	DH 1910 07	Hand Grip LH	1	
14	DS 1910 52	Boot For Lever LH	1	N.I.
15	DK 1810 43	Handle Bar Weight	2	
16	KA CF06 50	Bolt Socket-M6x1xl 50xcl 8.8xbrt	2	
17	39 1184 15	Nut Nyloc M5 x 0.8	1	N.I.
18	JB 4014 02	Switch Assembly Ignition	1	
19	LA D002 44	Bolt Flanged-M6x1xl22xbrxprecoat	2	
20	JY 4014 04	Switch Clutch	1	
21	DK 1810 82	Handle Bar Tube Assembly LH	1	
22	DK 1810 86	Handle Bar Tube Assembly RH	1	
23	DH 1910 17	Pipe Throttle	1	
24	DH 1811 19	Lock set 3in 1	1	
25	LA C000 20	Bolt Socket M8x1.25px55l	2	
26	39 1180 11	Washer	2	
27	DK 1810 36	Rubber Plug	2	

Front Fork

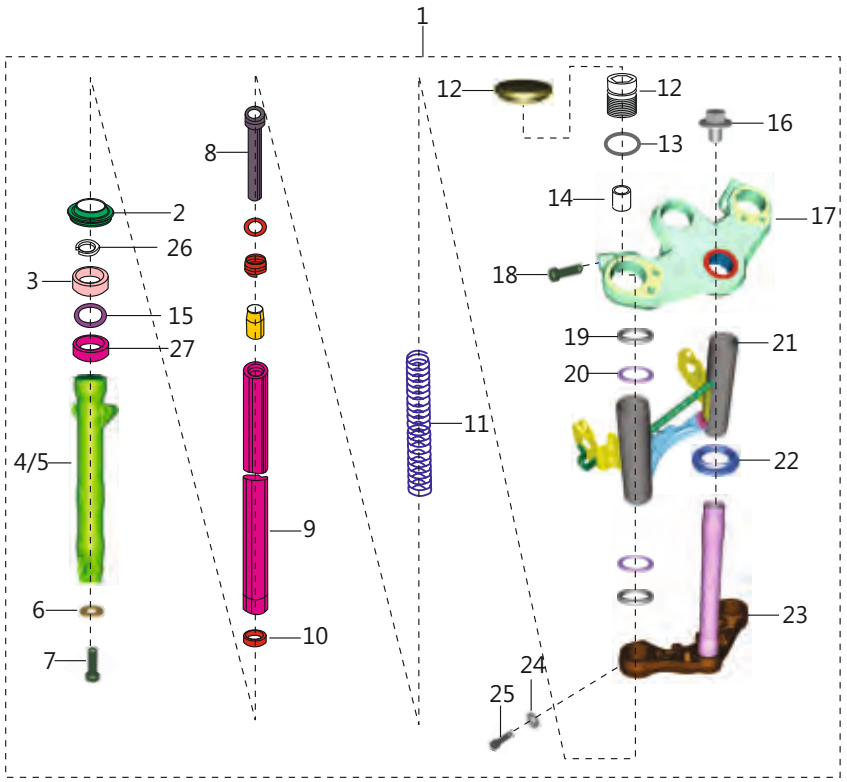

No.	Part No	Description	Qty	Remarks
1	DK 1810 87	Fork Assembly Front	1	
2	DK 1810 21	Inner Dust Seal	2	
3	DJ 1710 39	Oil Seal	2	
4	DK 1810 90	Outer Tube LH	1	
5	DK 1810 91	Outer Tube RH	1	
6	DK 1810 07	Copper Washer	2	
7	DK 1810 06	Socket Headed Bolt - M10 X1.5x35	2	
8	DK 1810 10	Seat Pipe	2	
9	DK 1810 92	Fork Pipe Spinning	2	
10	DK 1810 11	Slide Bush	2	
11	DK 1810 73	Spring Main Spring	2	
12	DK 1810 22	Bolt Fork	2	
13	DK 1810 23	'O' Ring	2	
14	DK 1810 93	Spacer Tube	2	
15	DK 1810 18	Washer Seal	2	
16	59 0400 05	Bolt	1	
17	56 DK33 Y9	Bracket Upper Black Sprint Matte	1	
18	KA CF08 35	Bolt Socket-m8x1.25xl35xcl8.8xbrt	2	
19	JC 1810 23	Cushion Rubber	2	
20	JC 1810 22	Cover Trail B	4	
21	JC 1810 24	Lamp Shade Assembly	1	
22	DG 1810 45	Bearing Cone Upper	1	
23	DK 1810 24	Under Bracket Sub Assembly	1	
24	JC 1810 20	Spring Washer	2	
25	DK 1810 28	Bolt	2	
26	DK 1810 20	Oil Seal Stopper	2	
27	DK 1810 17	Guide Bush	2	

Fuel Tank, Cap Tank, Fuel Gauge & Fuel Pump

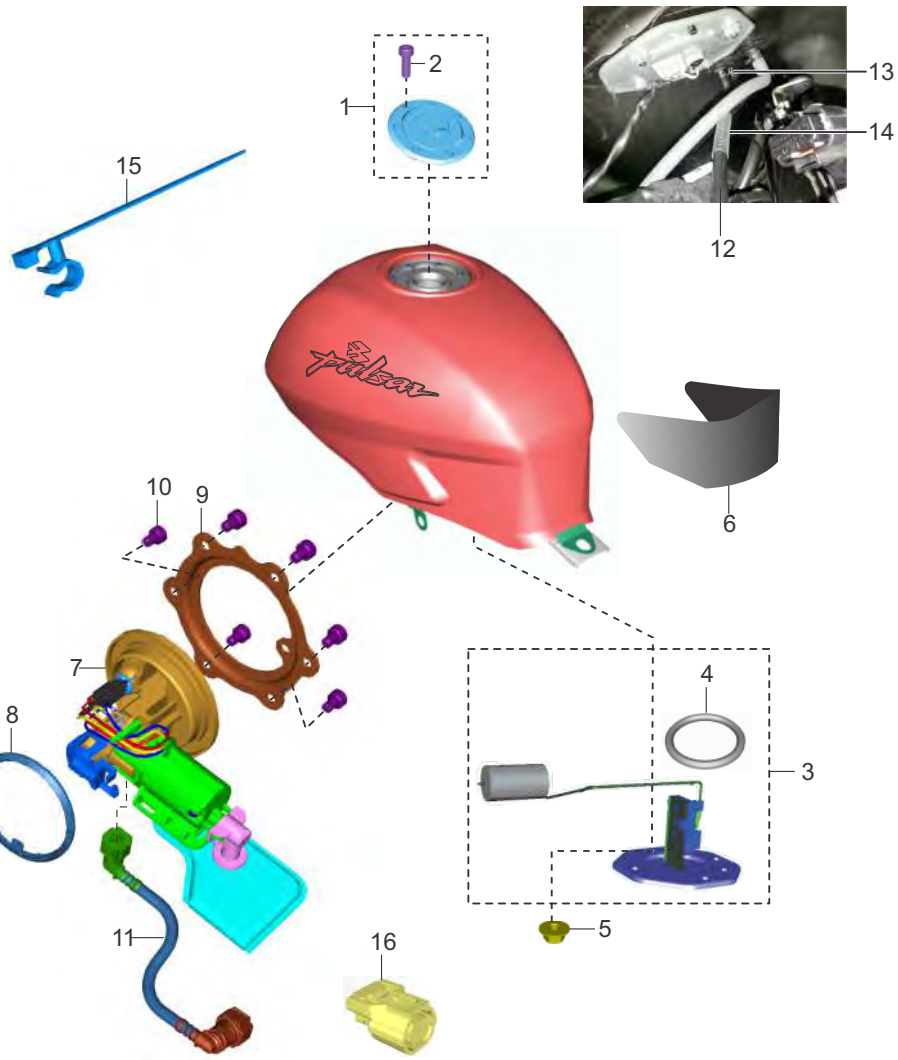

No.	Part No	Description	Qty	Remarks
1	DK 1810 99	Lock Set	1	
2	KA CA05 16	Hex.Socket HD Cap Bolt	7	
3	DK 2011 61	Sensor Level Fuel	1	
4	JH 1710 17	Gasket Fuel Gauge	1	
5	KC GA05 05	Nut Hex Flanged	4	
6	DH 1410 20	Seat Tape	1	
7	AA 2013 75	Pump Fuel	1	
8	JH 1718 03	Gasket Fuel Pump Mtg.	1	
9	JH 1718 04	Plate Pressure	1	
10	LA C001 02	Bolt Socket M6 x 1	6	
11	DH 1410 91	Pipe Pump Fuel - Connector	1	
12	DT 1710 61	Pipe Drain	1	
13	DJ 1410 02	Clamp Drain Pipe	1	
14	JC 1410 34	Spring Drain Pipe	1	
15	JG 6012 57	Strap - Clip Swivel	1	
16	JH 4022 22	Harness Pigtail Fuel Pump	1	

THE WORLD'S FAVOURITE INDIAN

Fittings - Fuel Tank, Side Cover & Cover Seat

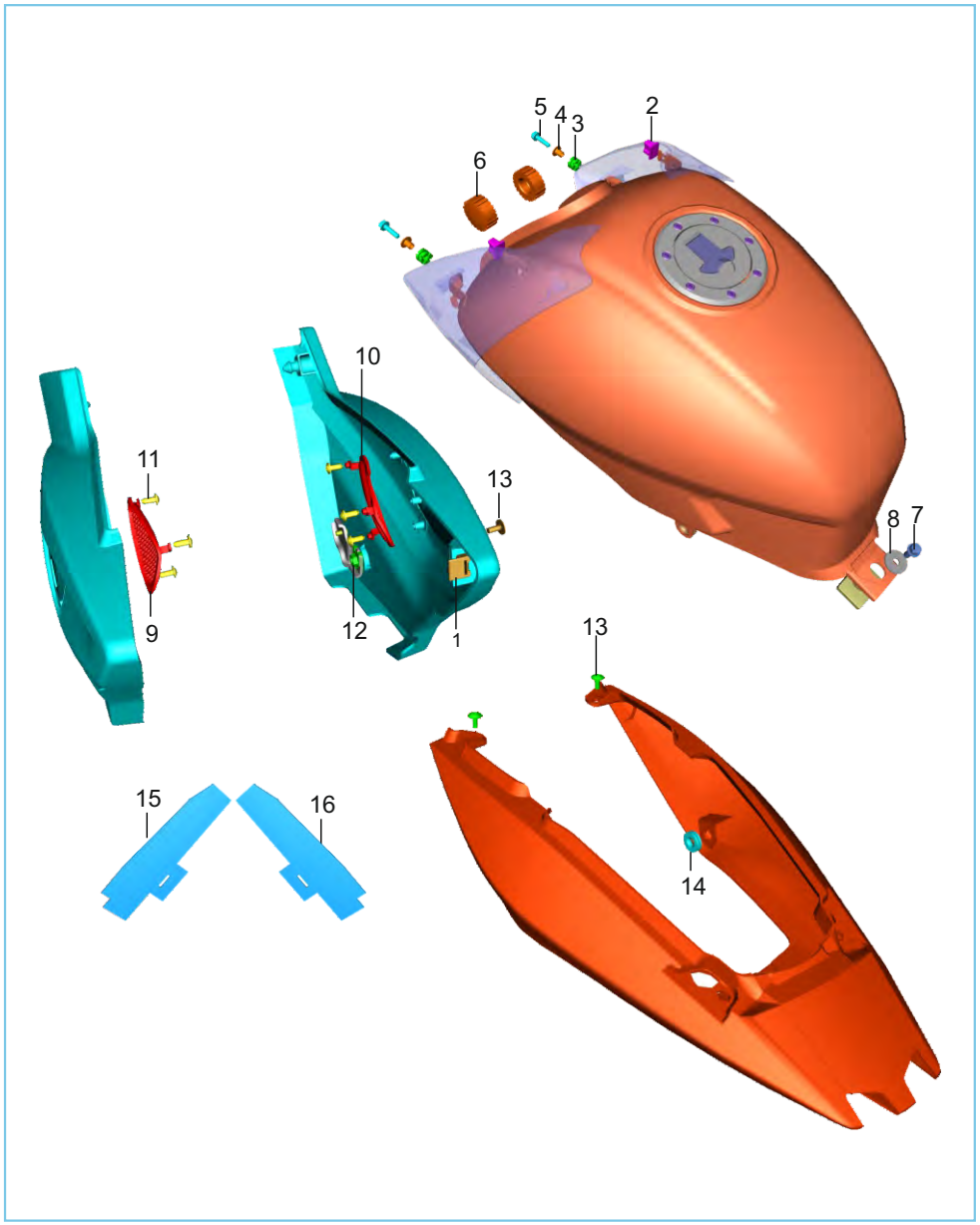

No.	Part No	Description	Qty	Remarks
1	DH 1611 33	Grommet Side Cover Rear	2	
2	JC 1410 17	Grommet II Tank Cover	2	
3	JC 1410 15	Grommet Tank Cover	2	
4	JC 1410 16	Collar	2	
5	KA DD06 22	Bolt-Flange-kad St-d Dia-06 L-22	2	
6	DJ 1410 08	Damper Front	2	
7	39 1556 04	Flange Bolt	1	
8	39 2424 11	Plain Washer	1	
9	DK 1611 23	Cover Side Mesh LH	1	
10	DK 1611 24	Cover Side Mesh RH	1	
11	59 0200 01	Self Tap Screw	6	
12	DJ 1810 65	Clip Nut	2	
13	DG 1611 21	Screw	3	
14	DH 1611 58	Grommet Side Cover RR	1	
15	DK 1611 71	Rubber Flap LH For Seat Cowl	1	
16	DK 1611 72	Rubber Flap RH For Seat Cowl	1	

THE WORLD'S FAVOURITE INDIAN

Speedometer Assembly

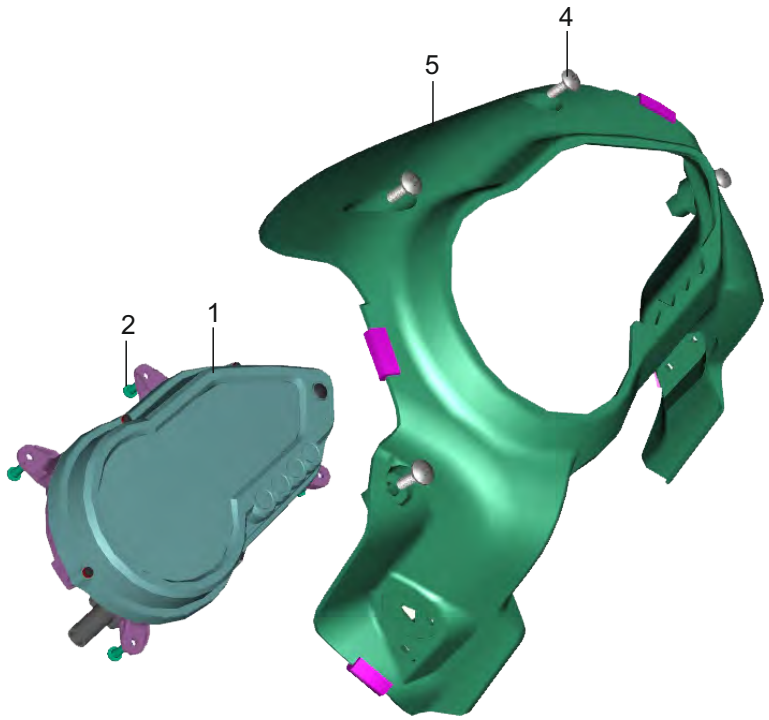

No.	Part No	Description	Qty	Remarks
1	DJ 1910 99	Speedometer	1	
2	39 1778 02	Self Tapping Screw	4	
3	DJ 2011 37	Dust Cover Electronic Cluster	1	N.I.
4	39 1907 01	Mushroom Head Screw	4	
5	DJ 1811 19	Speedo Meter Cover	1	
6	YD H190 02	Top Cover With Sealing Ring	1	N.I.

THE WORLD'S FAVOURITE INDIAN

Control Cables

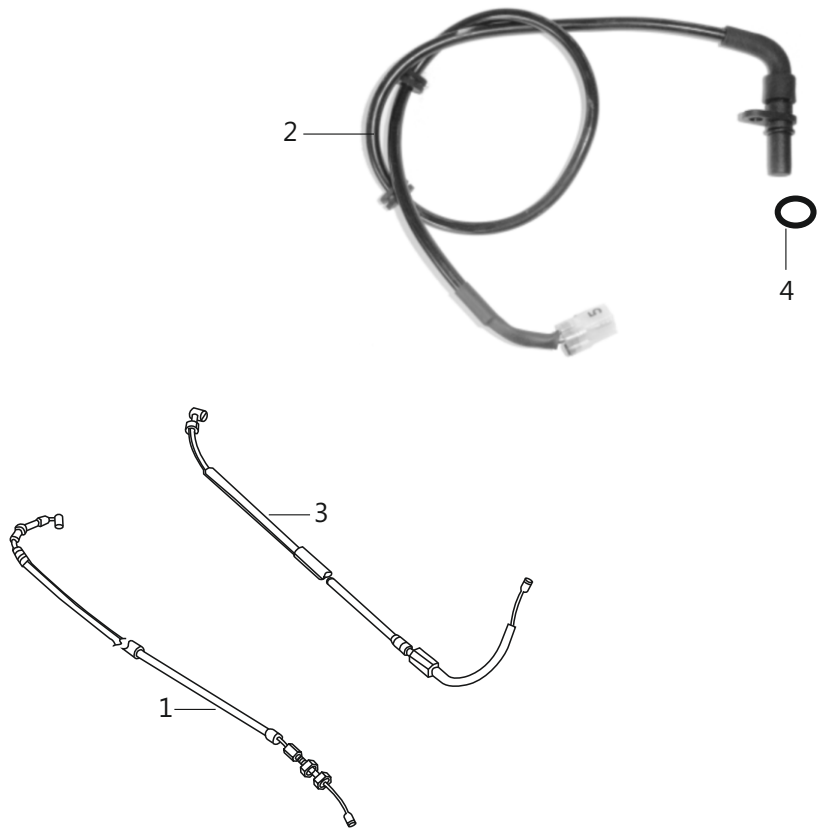

No.	Part No	Description	Qty	Remarks
1	DH 1910 82	Cable Accelerator	1	
2	JC 2010 43	Speedo Sensor With Cable 'O' Ring	1	
3	JC 1910 04	Cable Clutch	1	
4	59 2100 19	'O' Ring	1	

THE WORLD'S FAVOURITE INDIAN

Chain Case

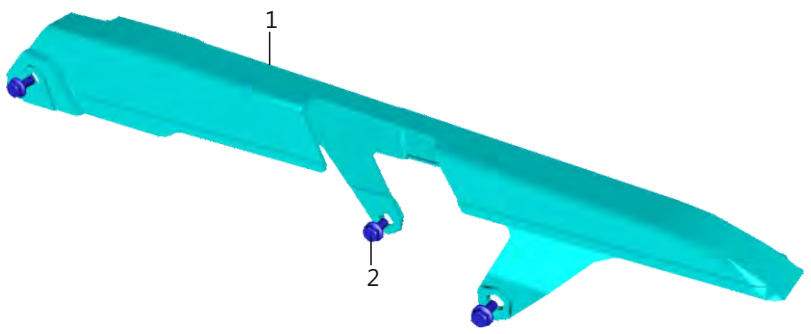

No.	Part No	Description	Qty	Remarks
1	DK 1612 50	Cover Chain Integral	1	
2	JC 1610 23	Instruction Label	1	N.I.
3	KA DD06 12	Bolt Flanged	3	

THE WORLD'S FAVOURITE INDIAN

Head Lamp Assembly & Fairing

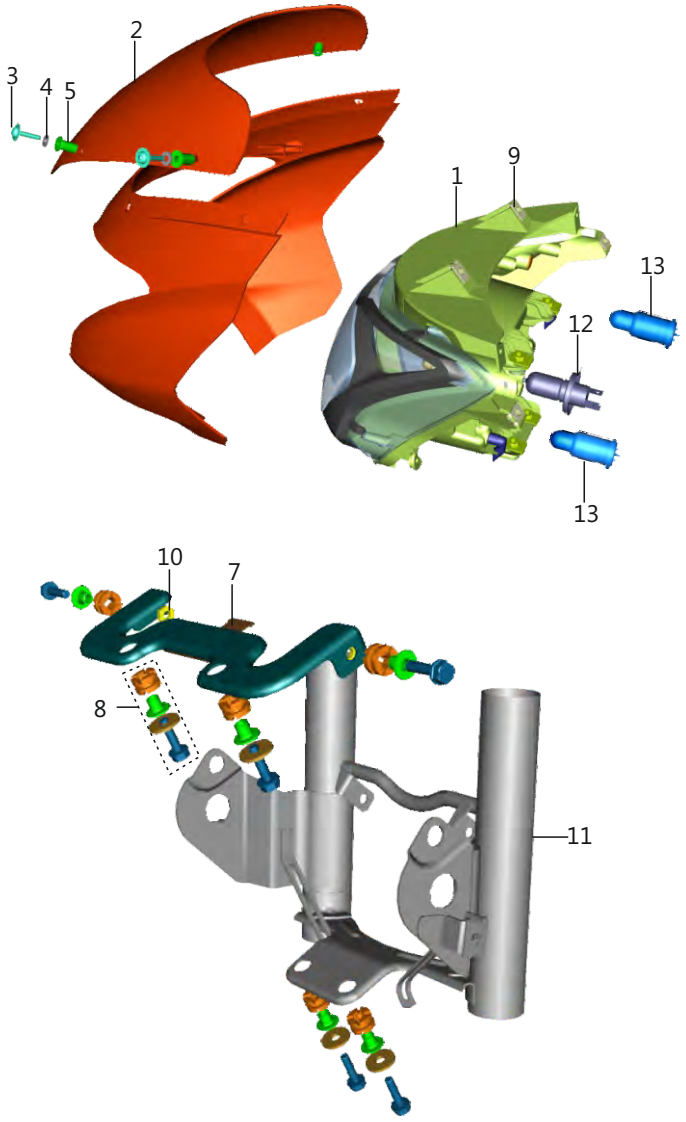

No.	Part No	Description	Qty	Remarks
1	JC 2010 51	Head Lamp Assembly	1	
2	DJ 1810 33	Wind Shield	1	
3	DF 1810 98	Bolt M-5	4	
4	39 2141 24	Non Metallic Washer	4	
5	DL 1810 10	Well Nut	4	
6	DJ 1810 37	Decal Wind Shield	1	N.I.
7	DH 1810 52	Fairing Mounting Upper Bracket	1	
8	36 DH40 20	Kit Hardware Mtg. Bracket	1	
9	DJ 1612 29	Clip Nut	4	
10	KC BA06 05	Nut Hex Thin	2	
11	JC 1810 24	Lamp Shade Assembly	1	
12	DH 1910 37	Lamp 12V	1	
13	GH 2010 12	Lamp :- 12V - 10W (Colour :- Amber)	2	
14	DJ 1811 20	Head Lamp Mask	1	N.I.

THE WORLD'S FAVOURITE INDIAN

Indicator Light Assembly

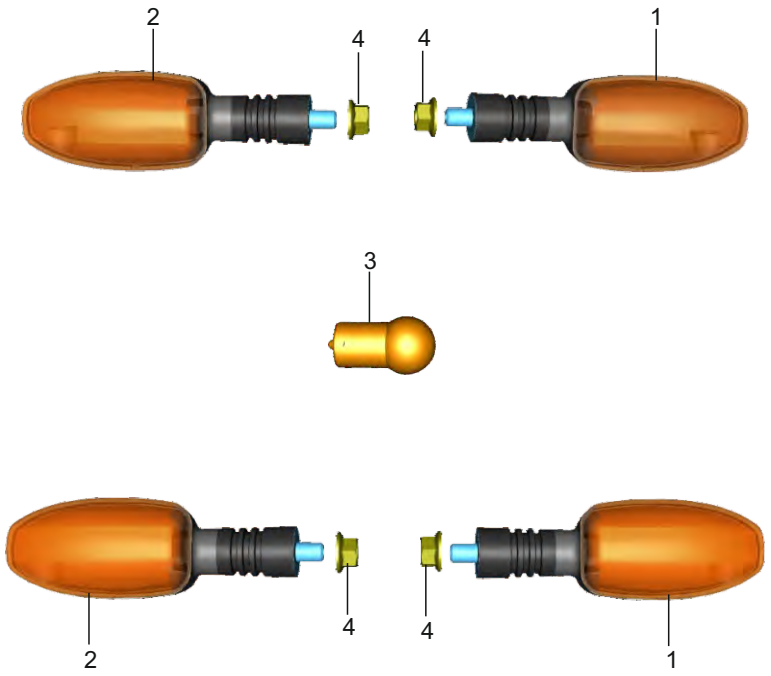

No.	Part No	Description	Qty	Remarks
1	DJ 2012 07	Blinker FR LH / RR RH	1	
2	DJ 2012 06	Blinker FR RH / RR LH	1	
3	GH 2010 12	Lamp 12V / 10W	4	
4	39 1225 15	Hex Nut Flange	4	
5	DK 1611 64	Indicator Mtg Bkt Rear	1	N.I.

THE WORLD'S FAVOURITE INDIAN

Tail Lamp Assembly & Front / Rear Number Plate

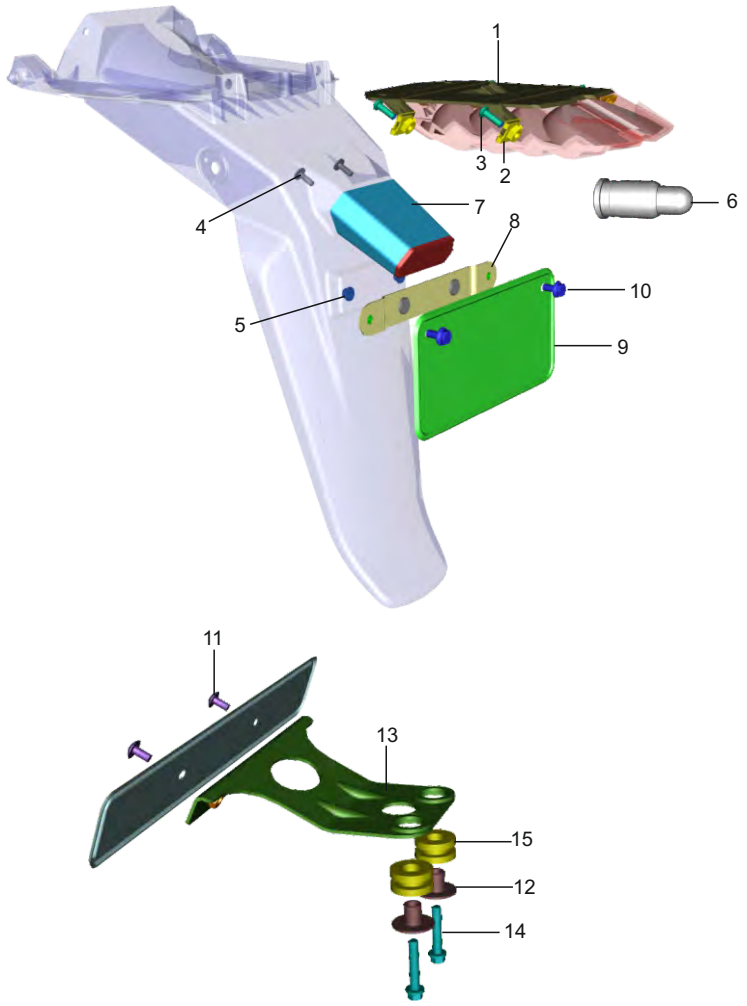

No.	Part No	Description	Qty	Remarks
1	DK 2010 03	Lamp Tail Assembly	1	
2	DK 1611 53	Clip Nut	4	
3	39 2592 01	Screw Pan Cross	4	
4	39 1907 01	Truss Screw	2	
5	39 1972 15	Bolt Flange	2	
6	GH 2010 12	Lamp :- 12V - 10W (Colour :- Amber)	1	
7	JW 4010 11	No. Plate Illumination	1	
8	DJ 1610 72	Rear No. Plate Bkt.	1	
9	DF 1612 52	Plate - Number :- Rear In Black	1	
10	KA DD06 12	Bolt Flanged	2	
11	39 1783 01	Truss Screw	2	
12	30 2110 05	Collar	2	
13	JC 1810 26	Number Plate Mounting Bracket	1	
14	39 1074 04	Bolt Flange	2	
15	DH 1612 93	Grommet For Number Plate Mtg	2	

THE WORLD'S FAVOURITE INDIAN

Tool Kit



No.	Part No	Description	Qty	Remarks
1	DJ 2210 19	Tool Kit	1	
2	DK 2210 24	O-Ring (Band Tool Kit)	2	

THE WORLD'S FAVOURITE INDIAN

Electrical Equipments

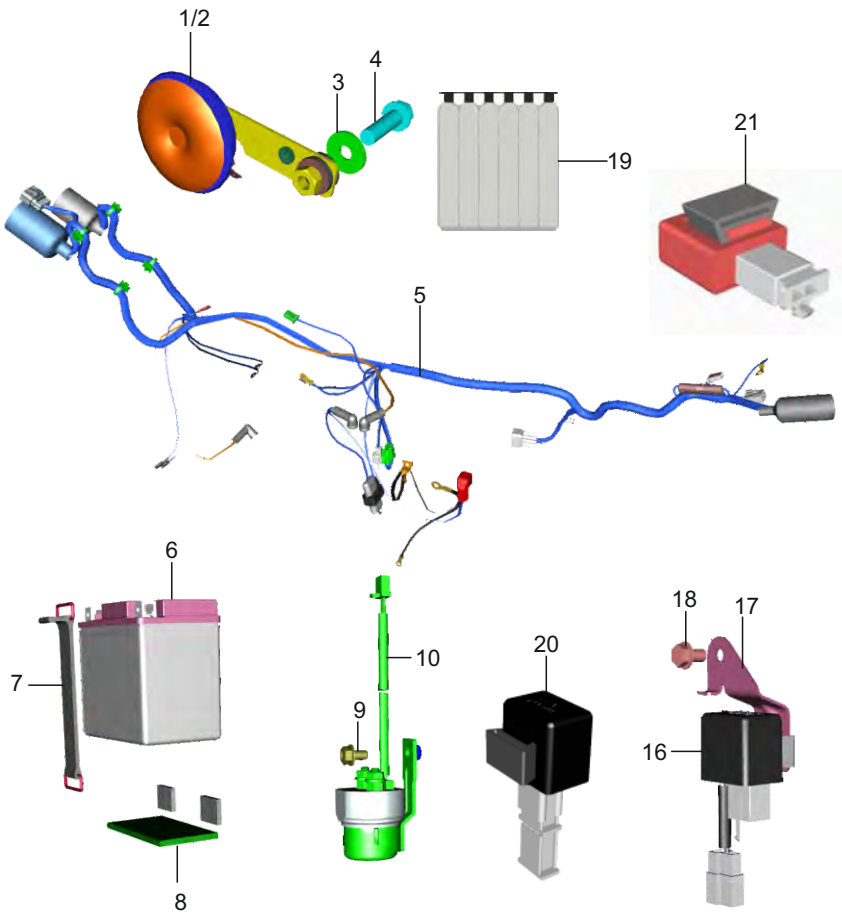

No.	Part No	Description	Qty	Remarks
1	DK 2010 37	Horn LH Dia 70	1	
2	DK 2010 38	Horn RH Dia 70	1	
3	39 1507 11	Plain Washer	1	
4	LA D000 18	Bolt Flanged M5x0.8x10	1	
5	DJ 2012 70	Harness Wiring	1	
6	JU 4018 03	Battery 8ah Vrla Dry W/o Acid Bottle	1	For Colombia
	JG 4018 02	12v 8ah Vrla Battery Dry Charged	1	For Peru
7	PA 4018 04	Band Battery 5ah	1	
8	DJ 1610 07	Pad Ii - Rubber :- Battery Bracket	3	
9	39 1944 04	Flange Bolt	1	
10	DH 2011 24	Relay Starter	1	
11	DK 2010 28	Cable - Battery To Earth	1	N.I.
12	JG 4022 02	Fuse Box Assembly / fuse	1	
13	DT 4022 26	Fuse 7.5a Mini	2	N.I.
14	DJ 2012 72	Cable Battery-Relay Starter	1	N.I.
15	30 1910 48	Cable Tie Lock	4	N.I.
16	JF 4020 06	Unit Regulator	1	
17	DJ 1613 27	Bkt Lcm Mtg	1	
18	39 1944 04	Bolt For Bkt Mtg (ug-5)	1	
19	JU 4018 02	Acid Bottle For 12v 8ah Dry Battery	1	
20	JL 4032 00	Termination Unit	1	
21	DS 2010 25	Flasher - D.C. :- Solid State	1	

Accessories / Grab Handle

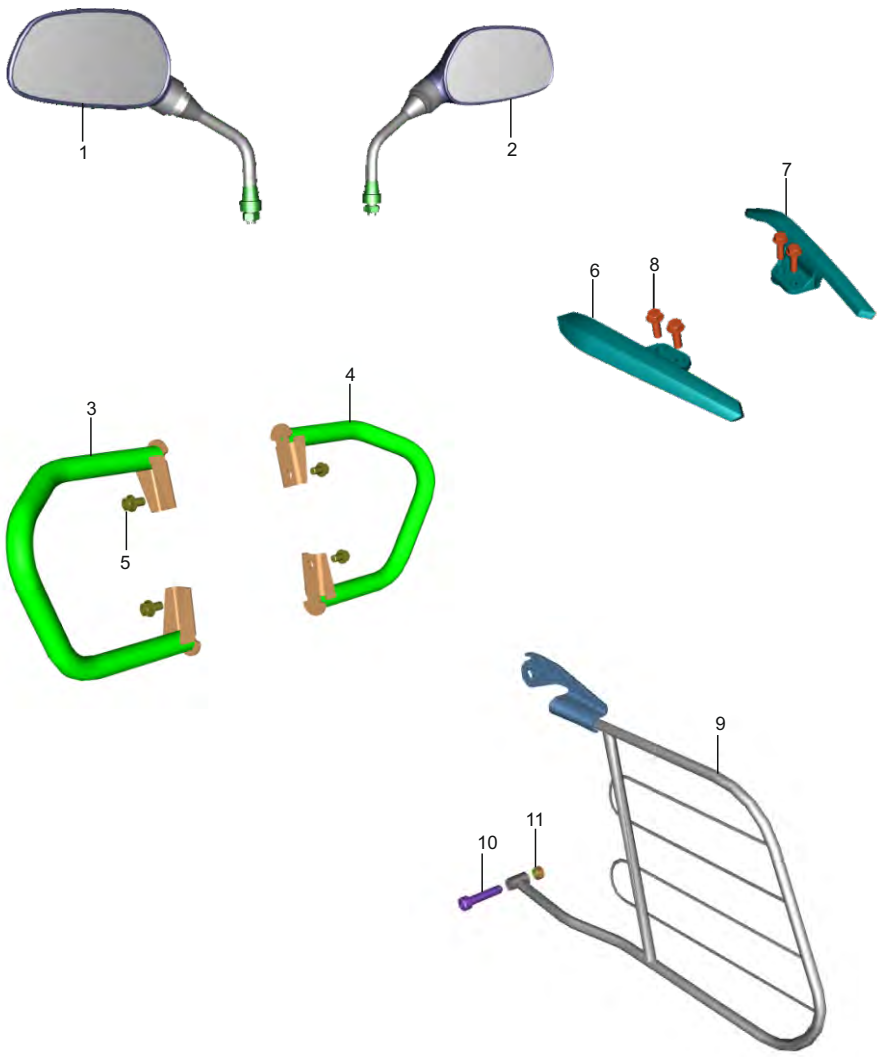

No.	Part No	Description	Qty	Remarks
1	DJ 2210 03	Mirror Assembly - LH	1	
2	DJ 2210 04	Mirror Assembly - RH	1	
3	DJ 2210 20	Leg Guard LH	1	
4	DJ 2210 21	Leg Guard RH	1	
5	KA DA08 14	Bolt Flanged	2	
6	56 DJ5U 9J	Grab Handle LH (DK161432)	1	Satin Red
7	56 DJ5V 9J	Grab Handle RH (DK161433)	1	Satin Red
8	KA DD08 25	Bolt Flange	4	
9	DK 1611 76	Saree Guard	1	
10	39 1608 04	Hex Socket Head Bolt	1	
11	39 0296 15	Nut	1	

THE WORLD'S FAVOURITE INDIAN

Non Painted Parts & Decals



No.	Part No	Description	Qty	Remarks
1	56 DJ23 23	Primer Painted Fuel Tank (DJ141085)	1	
2	DK 1610 87	Cover Side LH	1	
3	DH 1614 15	Cover Side RH	1	
4	DJ 1811 17	Fairing UG3	1	
5	DK 1612 02	Front Fender Assembly	1	
6	52 DK00 27	Seat Cowl With Grommet	1	
7	52 DJ03 73	Tank Flap Assembly LH K2 Unpainted	1	
8	52 DJ03 74	Tank Flap Assembly RH K2 Unpainted	1	
9	DH 0103 82	Decal Fairing Front Passion Red	1	
	DH 0104 01	Decal Fairing Platinum Silver	1	
	DH 0104 15	Decal Fairing Front S Orange	1	
10	DJ 0101 99	Decal Cowl Seat Ebony Black P Red	2	
	DJ 0102 00	Decal Cowl Seat EB Black Platinum Silver	2	
	DJ 0102 01	Decal Cowl Seat Ch. Black Sporty Orange	2	
11	DH 0103 84	Decal Wheel Passion Red	4	
	DH 0104 02	Decal Wheel Platinum Silver	4	
	DH 0104 16	Decal Wheel Sporty Orange	4	
12	DH 0103 88	Decal 3D Passion Red	2	
	DH 0104 05	Decal 3D Platinum Silver	2	
	DH 0104 19	Decal 3D Sporty Orange	2	

THE WORLD'S FAVOURITE INDIAN

Non Painted Parts & Decals



No.	Part No	Description	Qty	Remarks
13	DH 0103 90	Label Dome Tank Passion Red	1	
	DH 0104 03	Decal Dome Tank Platinum Silver	1	
	DH 0104 17	Decal Pad Tank Sporty Orange	1	

THE WORLD'S FAVOURITE INDIAN

Painted Parts & Decals



No.	Part No	Description	Qty	Remarks
1	52 DJ20 72	Fuel Tank EB.Blck+Pass.Red 3D Decal	1	
	52 DJ20 73	Fuel Tank EB.Blck+Pla.Silver 3D Decal	1	
	52 DJ20 74	Fuel Tank CH.Blk+Sp.Orange 3D Decal	1	
2	52 DH23 89	Side Cover LH Assly. Passion Red	1	
	52 DH24 47	Side Cover LH Assly. Platinum Silver	1	
	52 DH25 48	Side Cover LH Assly. Sporty Orange	1	
3	52 DH23 90	Side Cover RH Assly. Passion Red	1	
	52 DH24 48	Side Cover RH Assly. Platinum Silver	1	
	52 DH25 49	Side Cover RH Assly. Sporty Orange	1	
4	52 DJ05 66	Fairing With Chrome Decal	1	Pass.Red, Pla.Silver & Sporty Ornage
5	56 DK05 X3	Front Fender Ebony Black	1	
	56 DK05 6D	Front Fender Charcoal Black	1	
6	52 DJ18 00	Seat Cowl EB Black+P.Red 3D Decal	1	
	52 DJ18 06	Seat Cowl EB Black+P.Silver 3D Decal	1	
	52 DJ18 12	Seat Cowl CH.Black+Sport.Orag.Decal	1	
7	52 DH32 27	Tank Flap LH Assembly Ebony Black	1	
	52 DH32 29	Tank Flap LH Assembly Charcoal Black	1	
8	52 DH32 28	Tank Flap RH Assembly Ebony Black	1	
	52 DH32 30	Tank Flap RH Assembly Charcoal Black	1	
9	DH 0103 82	Decal Fairing Front Passion Red	1	
	DH 0104 01	Decal Fairing Front Platinum Silver	1	
	DH 0104 15	Decal Fairing Front Sporty Orange	1	

Painted Parts & Decals



No.	Part No	Description	Qty	Remarks
10	DJ 0101 99	Decal Cowl Seat Ebony Black Red	2	
	DJ 0102 00	Decal Cowl Seat E Black P Silver	2	
	DJ 0102 01	Decal Cowl Seat Ch. Black S Orange	2	
11	DH 0103 84	Decal Wheel Passion Red	4	
	DH 0104 02	Decal Wheel Platinum Silver	4	
	DH 0104 16	Decal Wheel Sporty Orange	4	
12	DH 0103 88	Decal 3D Passion Red	2	
	DH 0104 05	Decal 3D Platinum Silver	2	
	DH 0104 19	Decal 3D Sporty Orange	2	
13	DH 0103 90	Label Dome Tank Passion Red	1	
	DH 0104 03	Decal Dome Tank Platinum Silver	1	
	DH 0104 17	Decal Pad Tank Sporty Orange	1	

THE WORLD'S FAVOURITE INDIAN

Sr No	Kit Part No.	Kit Description	Consisting of Following Parts		
			Part No.	Description	Qty/Kit
1	36DK0007	Kit Centrifuigal Oil Filter	39220011	Washer - Plain (Primary Drive Gear)	1
			DH101234	Gasket -Centrifugal Oil Filter	1
			39226701	Screw - Slotted & Cross Recess Csk	3
			DH101066	Joint - Oil Delivery :- B	1
			DH101067	Spring - Oil Delivery :- B	1
			39219908	Pin - Snap (Oil Delivery Joint B)	1
2	36DK0038	Kit Set Primary Drive & Driven	DH101628	Gear Primary Drive	1
			DK101561	Housing Comp. Clutch	1
3	36PD0012	Kit Assly. Clutch Cover-A102	PD541228	Cover Clutch	1
			DK101738	Decal Cover RH	1
			39199020	Bearing - Needle	1
			39104119	Seal - Oil	1
			CB101220	Plug - Taper :- 6 X 7	2
4	36DK0159	Kit St. Cone With Grease	DK181050	Cage Bearing Steering Top	1
			DG181045	Bearing Cone :- Upper	1
			DG181005	Bearing Cone	1
			DG181003	Washer	1
			DG181004	Seal - Oil	1
			DK181051	Cage Bearing Steering Bottom	1
			DG181047	Bearing Race - Lower	1
			DG181046	Bearing Race - Upper	1
5	36DK0013	Kit Hardware Pillion Sup	DJ161186	Washer	2
			DH161061	Pin - Pillion Step	2
			30141031	Ring - O	2
			39104011	Washer - Plain	2
			39078408	Pin - Split	2
6	36DU1901	Cable Adj.kit - CT 100	30191017	Nut	2
			DD191147	Screw For Cable Adjuster	2
7	36DH4020	Kit Hardware Fairing Mounting	DJ181029	Collar - Fairing Mounting	6
			DJ181064	Grommet - Fairing Mounting	6
			39021111	Washer - Plain	4
			39155204	Bolt - Flange :- M6	4
8	36DJ4105	Valve Kit	DJ101808	Valve Intake	1
			DJ101125	Valve - Exhaust	1
9	36DH4245	Kit Cam Chain Guide	DH102539	Guide Chain Tight Side	1
			DH102538	Guide Chain Slack Side	1

Kit List

BAJAJ pulsar DTS-i 180 FI

Sr No	Kit Part No.	Kit Description	Consisting of Following Parts		
			Part No.	Description	Qty/Kit
10	36DJ4106	Block Piston Assembly	DJ101815	Piston Assembly	1
			DJ101780	Block Cylinder Assembly	1
11	36PD0107	Kit Friction Plate	DK101568	Clutch Friction Disk-B	1
			PD551419	Disk C Friction Clutch	1
			DK101566	Clutch Friction Disk (CFD)	3

THE WORLD'S FAVOURITE INDIAN

Page no.	Fig. no.	Old part no.	New part no.	Description	Updation date	Remarks

THE WORLD'S FAVOURITE INDIAN

Amendment Sheet

BAJAJ Pulsar DTS-i 180 FI

Page no.	Fig. no.	Old part no.	New part no.	Description	Updation date	Remarks

THE WORLD'S FAVOURITE INDIAN

Part Number	Figure No.	Page No.
22150241	10	50
30151082	17	66
30161157	2	56
30191048	15	96
30211005	12	92
31101173	4	12
31121006	8	10
31201079	8	72
36DH4020	8	88
36DH4245	4	8
36DJ4105	7	6
36DJ4106	1	10
36DK0007	7	12
36DK0013	5	52
36DK0036	6	66
36DK0038	9	12
36DK0069	2	70
36DK0070	2A	70
36DK0071	4	70
36DK0159	4	48
36DU1901	11	74
36PD0012	1	26
36PD0107	6	30
39029615	11	98
39071111	6	54
39071411	15	50
39075201	3	24
39090012	4	60
39099906	10	26
39104119	3	26
39104119	18	26
39106204	24	16
39106901	9	52
39107404	7	28

Part Number	Figure No.	Page No.
39107404	14	92
39118011	16	46
39118011	26	74
39118415	17	74
39122515	4	90
39128321	5	4
39128321	8	4
39150711	3	96
39155304	10	74
39155604	7	80
39160804	10	98
39162011	9	14
39166005	1	4
39167704	16	24
39168606	8	14
39168606	4	40
39177802	2	82
39178301	11	92
39188020	3	8
39190701	4	82
39190701	4	92
39193120	6	12
39194404	9	96
39194404	18	96
39197015	5	36
39197015	5	46
39197215	5	92
39199020	11	30
39199715	9	50
39199819	13	20
39201719	5	6
39203804	15	66
39213217	5	10
39214124	4	88

Part Index

BAJAJ pulsar DTS-i 180 FI

Part Number	Figure No.	Page No.
39215220	5	14
39215220	9	22
39215811	2	16
39215911	10	16
39215911	15	16
39216011	9	16
39216511	3	12
39218106	2	10
39219019	15	24
39219421	6	40
39220011	16	30
39220307	8	12
39228501	2	44
39236615	17	50
39238315	14	20
39239121	3	2
39242411	8	80
39244011	9	6
39244311	17	26
39248104	5	68
39253204	8	2
39254220	2	8
39258320	17	24
39259201	3	92
39260120	6	22
39260320	18	24
39260801	10	4
39264715	6	2
39266921	14	8
52DH0169	1	40
52DH0177	10	14
52DH2389	2	104
52DH2390	3	104
52DH2447	2	104

Part Number	Figure No.	Page No.
52DH2448	3	104
52DH2548	2	104
52DH2549	3	104
52DH3227	7	104
52DH3228	8	104
52DH3229	7	104
52DH3230	8	104
52DJ0373	7	100
52DJ0374	8	100
52DJ0566	4	104
52DJ1783	2	22
52DJ1800	6	104
52DJ1806	6	104
52DJ1812	6	104
52DJ2072	1	104
52DJ2073	1	104
52DJ2074	1	104
52DK0027	6	100
52JN0136	2	2
52PD1045	1	28
52PD1052	1	24
56DJ2323	1	100
56DJ3X1Y	1	52
56DJ3Y1Y	2	52
56DJ4E1Y	25	26
56DJ4E1Y	12	44
56DJ5U9J	6	98
56DJ5V9J	7	98
56DK056D	5	104
56DK05X3	5	104
56DK31Y9	3	74
56DK32Y9	2	74
56DK33Y9	17	76
56DK9D1Y	4	28

Part Number	Figure No.	Page No.
59020001	11	80
59040005	16	76
59040041	8	46
59040041	17	46
59040048	2	64
59050008	2	24
59200006	5	22
59200007	7	24
59200007	3	44
59200028	12	14
59200029	19	24
59210006	5	24
59210019	4	84
AA101437	8	22
AA101437	4	42
AA111141	19	42
AA141048	12	34
AA201375	7	78
AP101043	5	28
AZ591064	4	36
CS101128	13	8
DD101062	7	8
DD111012	15	42
DD121007	9	10
DD161071	9	36
DD161071	13	52
DD211003	6	38
DE151037	6	64
DE151043	7	64
DE151046	4	64
DE151046	10	70
DE151047	5	64
DE151047	11	70
DE151048	3	64

Part Number	Figure No.	Page No.
DE191028	14	62
DE191029	13	62
DE191030	10	62
DE191033	6	62
DE191036	15	62
DE191043	1	62
DF161252	9	92
DF181098	3	88
DG101029	4	6
DG101339	2	72
DG101418	7	26
DG101418	2	28
DG101456	14	24
DG101498	11	2
DG101498	10	24
DG111008	8	42
DG121002	10	34
DG151005	8	60
DG151007	9	60
DG151008	12	60
DG151008	2	66
DG161121	13	80
DG161124	10	36
DG171018	5	50
DG171019	3	50
DG171022	8	50
DG171034	6	50
DG171038	14	50
DG181045	22	76
DH010382	9	100
DH010382	9	104
DH010384	11	100
DH010384	11	106
DH010388	12	100

Part Index

BAJAJ pulsar DTS-i 180 FI

Part Number	Figure No.	Page No.
DH010388	12	106
DH010390	13	102
DH010390	13	106
DH010401	9	100
DH010401	9	104
DH010402	11	100
DH010402	11	106
DH010403	13	102
DH010403	13	106
DH010405	12	100
DH010405	12	106
DH010415	9	100
DH010415	9	104
DH010416	11	100
DH010416	11	106
DH010417	13	102
DH010417	13	106
DH010419	12	100
DH010419	12	106
DH101064	10	12
DH101072	2	14
DH101079	4	16
DH101084	8	16
DH101111	12	16
DH101141	4	26
DH101142	5	26
DH101146	3	18
DH101152	23	26
DH101154	12	26
DH101172	8	44
DH101195	11	12
DH101197	2	26
DH101203	20	24
DH101235	5	16

Part Number	Figure No.	Page No.
DH101275	20	26
DH101275	3	30
DH101295	8	6
DH101319	17	16
DH101355	12	12
DH101385	5	44
DH101389	6	18
DH101392	10	8
DH101393	3	20
DH101394	10	22
DH101396	2	12
DH101412	6	8
DH101424	6	14
DH101487	7	22
DH101493	4	18
DH101496	9	18
DH101508	3	4
DH101544	16	26
DH101581	8	24
DH101581	4	44
DH101607	12	36
DH101648	15	30
DH101714	15	20
DH101719	12	24
DH101896	3	22
DH101916	10	2
DH102118	7	4
DH102125	8	8
DH102189	8	18
DH102200	4	24
DH102201	5	2
DH102349	2	36
DH102351	11	36
DH102448	7	10

Part Number	Figure No.	Page No.
DH102457	6	34
DH102462	1	42
DH111013	16	42
DH111015	14	42
DH111016	17	42
DH111114	1	44
DH111122	2	42
DH111123	3	42
DH121010	3	40
DH121011	14	26
DH121012	15	26
DH121035	5	40
DH141020	6	78
DH141091	11	78
DH161046	4	38
DH161066	7	56
DH161100	15	52
DH161121	4	56
DH161133	1	80
DH161145	5	56
DH161146	8	56
DH161155	8	36
DH161155	11	52
DH161158	14	80
DH161233	9	38
DH161245	18	46
DH161293	15	92
DH161415	3	100
DH161416	13	34
DH161731	13	42
DH161758	2	46
DH161778	1	46
DH171019	7	50
DH171019	13	60

Part Number	Figure No.	Page No.
DH171019	20	66
DH181052	7	88
DH181119	24	74
DH191007	13	74
DH191008	12	74
DH191017	23	74
DH191037	12	88
DH191082	1	84
DH201111	5	74
DH201112	6	74
DH201124	10	96
DH211019	14	38
DJ010199	10	100
DJ010199	10	106
DJ010200	10	100
DJ010200	10	106
DJ010201	10	100
DJ010201	10	106
DJ101012	2	4
DJ101312	23	16
DJ101350	1	30
DJ101705	6	24
DJ101738	9	4
DJ101786	1	12
DJ101788	1	8
DJ101811	1	2
DJ101815	3	10
DJ101822	1	22
DJ101825	1	36
DJ121082	3	34
DJ121137	7	34
DJ121138	6	4
DJ121139	1	34
DJ121142	6	32

Part Index

BAJAJ pulsar DTS-i 180 FI

Part Number	Figure No.	Page No.
DJ121143	2	32
DJ121156	1	32
DJ141002	13	78
DJ141008	13	46
DJ141008	6	80
DJ151073	8	64
DJ151074	9	64
DJ151075	10	64
DJ151114	2	62
DJ161007	8	96
DJ161069	4	54
DJ161072	8	92
DJ161126	3	52
DJ161127	4	52
DJ161128	7	52
DJ161129	8	52
DJ161186	6	52
DJ161228	8	28
DJ161229	9	88
DJ161278	12	52
DJ161285	14	52
DJ161327	17	96
DJ161461	1	48
DJ171039	3	76
DJ171044	12	50
DJ181033	2	88
DJ181037	6	88
DJ181065	12	80
DJ181117	4	100
DJ181119	5	82
DJ181120	14	88
DJ191025	4	62
DJ191025	7	68
DJ191026	5	62

Part Number	Figure No.	Page No.
DJ191026	8	68
DJ191028	7	62
DJ191029	8	62
DJ191030	9	62
DJ191056	11	62
DJ191057	3	62
DJ191081	7	74
DJ191083	8	74
DJ191099	1	82
DJ201109	12	62
DJ201137	3	82
DJ201206	2	90
DJ201207	1	90
DJ201270	5	96
DJ201272	14	96
DJ221003	1	98
DJ221004	2	98
DJ221019	1	94
DJ221020	3	98
DJ221021	4	98
DK101063	6	10
DK101068	13	12
DK101072	13	30
DK101102	6	16
DK101103	3	16
DK101104	7	16
DK101105	14	16
DK101126	14	30
DK101135	10	18
DK101144	19	16
DK101159	1	18
DK101160	2	18
DK101176	7	44
DK101177	16	20

Part Number	Figure No.	Page No.
DK101180	9	20
DK101182	6	20
DK101185	11	20
DK101185	4	72
DK101186	10	20
DK101186	3	72
DK101187	12	20
DK101187	5	72
DK101245	21	16
DK101251	6	26
DK101253	4	20
DK101284	5	42
DK101314	6	36
DK101314	10	52
DK101326	6	6
DK101352	20	16
DK101380	13	24
DK101471	1	16
DK101480	13	26
DK101569	5	30
DK101570	17	30
DK101571	18	30
DK101573	12	30
DK101574	10	30
DK101717	11	16
DK101718	13	16
DK101719	18	16
DK101721	16	16
DK101722	2	20
DK101725	5	20
DK101733	1	20
DK101738	19	26
DK101738	6	28
DK101748	1	6

Part Number	Figure No.	Page No.
DK101751	2	6
DK101755	3	6
DK101898	5	34
DK101957	5	18
DK121015	4	34
DK151009	1	66
DK151012	3	66
DK151015	11	66
DK151022	13	66
DK151026	3	58
DK151028	7	60
DK151031	1	70
DK151034	2	68
DK151039	2	58
DK151040	5	58
DK151041	9	70
DK151042	5	70
DK151045	4	68
DK151050	4	58
DK151063	6	68
DK151070	3	70
DK151081	19	66
DK151082	18	66
DK151084	9	68
DK151085	12	70
DK151088	13	70
DK151089	6	70
DK151090	7	70
DK151095	1	60
DK151096	10	60
DK151097	14	66
DK151122	8	70
DK161085	1	54
DK161087	2	100

Part Index

BAJAJ pulsar DTS-i 180 FI

Part Number	Figure No.	Page No.
DK161098	8	54
DK161122	1	56
DK161123	9	80
DK161124	10	80
DK161153	2	92
DK161161	6	46
DK161163	7	72
DK161164	5	90
DK161171	15	80
DK161172	16	80
DK161176	9	98
DK161202	5	100
DK161250	1	86
DK161338	5	54
DK161476	10	38
DK161497	11	46
DK161498	12	46
DK161504	23	42
DK161519	6	56
DK171003	2	50
DK171006	4	50
DK171008	1	50
DK171014	13	50
DK181006	7	76
DK181007	6	76
DK181010	8	76
DK181011	10	76
DK181012	4	10
DK181017	27	76
DK181018	15	76
DK181020	26	76
DK181021	2	76
DK181022	12	76
DK181023	13	76

Part Number	Figure No.	Page No.
DK181024	23	76
DK181028	25	76
DK181036	27	74
DK181043	15	74
DK181050	5	48
DK181051	6	48
DK181073	11	76
DK181075	2	48
DK181076	3	48
DK181082	21	74
DK181086	22	74
DK181087	1	76
DK181090	4	76
DK181091	5	76
DK181092	9	76
DK181093	14	76
DK181099	1	78
DK191014	6	72
DK191042	1	72
DK191046	1	74
DK201003	1	92
DK201028	11	96
DK201037	1	96
DK201038	2	96
DK201161	3	78
DK211007	2	38
DK211008	11	38
DK211009	3	38
DK211012	1	38
DK211014	5	38
DK221024	2	94
DL181010	5	88
DL191014	9	74
DS101071	24	26

Part Number	Figure No.	Page No.
DS101084	7	2
DS101154	5	12
DS101166	4	2
DS101215	8	26
DS121116	15	34
DS121117	9	34
DS121126	11	34
DS151073	8	66
DS161125	3	54
DS161156	12	38
DS191052	14	74
DS201025	21	96
DS211004	8	38
DT171061	12	78
DT402226	13	96
DT561205	7	20
DU101223	11	24
DV101048	22	16
GH201012	13	88
GH201012	3	90
GH201012	6	92
JB401402	18	74
JB591068	13	36
JC101034	11	8
JC101145	9	44
JC141015	3	80
JC141016	4	80
JC141017	2	80
JC141034	14	78
JC151013	1	58
JC151016	9	66
JC151019	2	60
JC161023	2	86
JC181020	24	76

Part Number	Figure No.	Page No.
JC181022	20	76
JC181023	19	76
JC181024	21	76
JC181024	11	88
JC181026	13	92
JC191004	3	84
JC201043	2	84
JC201046	5	60
JC201051	1	88
JD131811	11	60
JE511237	5	8
JF402006	11	42
JF402006	16	96
JG131219	10	66
JG131821	1	68
JG401411	13	56
JG401802	6	96
JG402202	12	96
JG581076	8	34
JG581423	3	32
JG581424	5	32
JG601257	15	78
JG611206	4	32
JH171017	4	78
JH171803	8	78
JH171804	9	78
JH402222	16	78
JL351240	12	42
JL403200	20	96
JM171004	11	50
JP351439	20	42
JU401802	19	96
JU401803	6	96
JU581014	11	4

Part Index

BAJAJ pulsar DTS-i 180 FI

Part Number	Figure No.	Page No.
JW401011	7	92
JW591028	3	36
JY401404	20	74
JY401408	11	56
KAAA0610	21	42
KAAA0818	2	54
KAAD0860	3	46
KACA0516	2	78
KACA0812	14	46
KACA0820	7	46
KACF0650	16	74
KACF0835	18	76
KADA0608	9	72
KADA0814	5	98
KADD0610	13	38
KADD0610	9	42
KADD0612	3	86
KADD0612	10	92
KADD0618	10	42
KADD0622	8	20
KADD0622	7	38
KADD0622	5	80
KADD0625	18	42
KADD0825	8	98
KADD0860	4	46
KADD0865	10	46
KADD08A0	9	46
KADD08C5	15	46
KADF0825	3	68
KADS0516	12	56
KAED0620	12	8
KAED0620	7	54
KAED0625	11	14
KAED0625	22	26

Part Number	Figure No.	Page No.
KAED0625	9	30
KAED0625	2	40
KAEW0635	9	2
KBBA0408	3	60
KBBA0508	14	34
KBBA0525	2	34
KCBA0605	10	88
KCBK1006	4	66
KCGA0505	5	78
KDBA1022	7	36
KDDB1018	16	50
KEAB1010	7	14
KHAA3225	3	56
KHDA0408	7	18
KJAC1824	4	4
KPAC6005	7	66
KPAF6004	4	22
KPBC6202	6	60
KPBC6202	12	66
KPBC6302	16	66
LAC00020	25	74
LAC00059	4	74
LAC00102	10	78
LAD00018	4	96
LAD00231	9	56
LAD00244	19	74
LAE00014	7	42
LAE00018	9	26
LAE00018	11	44
LAE00042	3	14
LAE00042	9	24
LCH00001	10	56
LDB00023	22	42
PA401804	7	96

Part Number	Figure No.	Page No.
PD131853	1	64
PD511084	9	8
PD531229	4	14
PD531232	1	14
PD541279	21	26
PD541279	2	30
PD541280	11	26
PD541291	3	28
PD541292	6	42
PD551421	4	30
PD551427	8	30
PD551439	7	30
PD551453	6	44
PD621203	10	44
PF131220	5	66
YDH19002	6	82

Part Number	Figure No.	Page No.

Part Index

BAJAJ pulsar DTS-i 180 FI

Part Number	Figure No.	Page No.

Part Number	Figure No.	Page No.

THE WORLD'S FAVOURITE INDIAN