pulsar NS160 EURO III / IV

BAJAJ
Distinctly Ahead

pulsar NS160 EURO III / IV

Spare Parts Catalogue



Notice

All information contained in this manual is based on the latest product information at the time of publication. Bajaj Auto Limited accepts no liability for any inaccuracies or omissions in this publication, although every possible care has been taken to make it as complete and accurate as possible. All procedures and specifications subject to change without prior notice. The right is reserved to make such changes at any time without prior notice and without incurring an obligation to make such changes to product manufactured previously. Contact your authorized Bajaj Dealer for the latest information on product improvements incorporated after this manual was issued.

REV. JULY. 2020

Copy rights : All rights reserved. No part of this publicatin may be reproduced, stored in a retrival system, Or transmitted in any form or by any means, electromic mechanical photocopying, recording or otherwise, without the prior written permission of Bajaj Auto LTD.

Foreword

We have pleasure in presenting the Spare Parts Catalogue for "**Pulsar NS 160 Euro III & IV Single & Twin Disc**" Motorcycle. This catalogue has been specially designed to assist you in selecting the correct parts for procurement to maintain 100% availability.

The Bajaj spares are subjected to the stringent quality control standards to ensure longer life of the vehicle. It is therefore necessary that only the Genuine Bajaj Spares are used.

In a continual effort to improve Performance and Efficiency of the vehicles, Specifications, Diagrams, Illustrations and Part Numbers can change without notice. Consequently, the description in this Spare Parts Catalogue cannot therefore be final and binding on us.

The modifications / alterations which are carried out after the issue of this catalogue, will be conveyed to you through our Service Circulars. You are requested to make necessary corrections in the Parts Catalogue as per the circulars so as to keep your catalogue up-to-date. This will ensure the appropriate and speedy delivery of the Spare Parts as the order placed will bear the latest part numbers.

In case, if you need any technical assistance contact the concerned Regional Office or write to us on the following address :

Bajaj Auto Limited
Spares - International Business
Akurdi, Pune 411 035 India

Instructions

pulsar NS160 EURO III / IV

1. How to Read the Catalogue : Open the catalogue and from the pictorial index locate the group in which the part you want to find is present. Turn over to the concerned page number (as given by pictorial index). Now find out the figure of the part you wish to order. Write down the part number against that particular figure number from the text.

   In case, if you have the part number and you need the other details, the part index can be used. The part index (at the end of the catalogue) will give you the figure and page number of the part you wish to order.

2. How to Order Spare Parts : The part number and the description of the part required should be invariably mentioned in the order as per the catalogue text.

   The latest part number as conveyed through our service circulars should only appear on the order. In case of ordering painted components, colour shade of the components should be mentioned.

   The quantity shown against the part number is the quantity per vehicle for that group so that particular quantity should be multiplied by the number of sets required.

3. Part Number System : We have used 8 digit system for part numbers. The model or hardware item is indicated by first two digits or alphanumeric, the next two or four digits indicate main group and the last four or two digits indicate serial number in main group or serial number or subgroup of fastener respectively. Thus the part numbers will be indicated by 2-2-4 or 2-4-2 digit system. Understanding this system will enable you to identify the spare parts easily.

4. Abbreviations : The following abbreviations are used in this catalogue.

Assly	Assembly	V	Volts
N.I.	Not illustrated	W	Watts
C'case	Crankcase	Accl.	Accelerator
Cyl	Cylinder	Comp.	Complete
O/s	Over size	Fr.	Front
Rr.	Rear	Std.	Standard
L	Length	A/t.	Alternate
R.H.	Right hand	L.H.	Left hand
Hex.	Hexagonal	AR	As required

Index

Plate No.	Description	Page No.
1	Cover Cylinder Head	2
2	Cylinder Head	4
3	Valve	6
4	Camshaft / Tensioner	8
5	Cylinder and Piston	10
6	Crankshaft	12
7	Balancer Assly	14
8	Transmission - Single Disc	16
9	Transmission - Twin Disc	18
10	Change Drum / Shift Fork	20
11	Gear Change Mechanism	22
12	Engine Assembly / Crankcase RH	24
13	Crankcase LH	26
14	Oil Pump	28
15	Kick Assembly	30
16	Cover Clutch	32
17	Oil Cooler	34
18	Cover Magneto	36
19	Clutch Assly	38
20	Starter Assembly	40
21	Regulator Assembly & H T Coil	42
22	Throttle Body	44
23	Air Cleaner Complete	46
24	EVAP EURO IV	48
25	Silencer Assembly	50
26	Seat Assembly / Seat Lock	52
27	Engine Mountings	54
28	Frame and Frame Fittings	56
29	Swing Arm / Rear Shock Absorber	58
30	Pillion Foot Rest / Holder	60
31	Mudguard - Front & Rear	62
32	Stand Assembly	64

pulsar NS150 EURO III / IV

Plate No.	Description	Page No.
33	Tube / Tyre / Rim	66
34	Front Hub Non ABS EURO III	68
35	Front Hub ABS EURO IV	70
36	Front Master Cylinder	72
37	Rear Master Cylinder	74
38	Front Caliper	76
39	Rear Caliper	78
40	Anti Brake Lock System - Single Disc	80
41	Anti Brake Lock System - Twin Disc	82
42	Rear Hub - Single Disc	84
43	Rear Hub - Twin Disc	86
44	Rear Brake Pedal	88
45	Handle Bar Assembly	90
46	Front Fork	92
47	Radiator Covers	94
48	Fuel Tank Assembly	96
49	Fuel Pump Assly	98
50	Fittings - Petrol Tank Cover & Flap	100
51	Fittings - Side Cover & Seat Cowl	102
52	Meter Assembly	104
53	Control Cables	106
54	Chain Case & Hugger Rear	108
55	Belly Pan Mounting	110
56	Head Lamp & Fairing	112
57	Indicator Light Assembly	114
58	Tail Lamp Assly / Front Number Plate	116
59	Electrical	118
60	Electrical Equipments	120
61	Tool Kit	122
62	Accessories / Grab Handle	124

Index

Plate No.	Description	Page No.
63	Painted Parts	126,128
64	Decals Sets	130,132
	Kit List	133,136
	Amendment Sheet	137,138
	Parts Index	139,154

pulsar NS160 EURO III / IV

Plate No.	Description	Page No.

Pictorial Index

PLATE NO. : 1 COVER CYLINDER HEAD	PAGE NO. 1

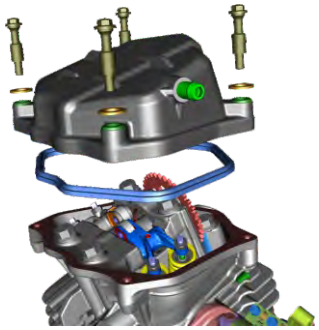

PLATE NO. : 2 CYLINDER HEAD	PAGE NO. 3

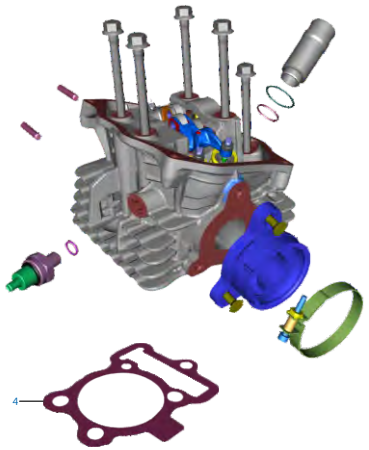

PLATE NO. : 3 VALVE	PAGE NO. 5

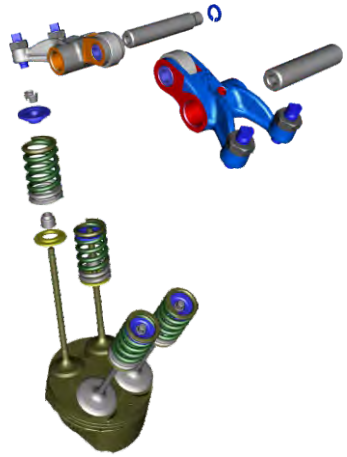

PLATE NO. : 4 CAMSHAFT / TENSIONER	PAGE NO. 7

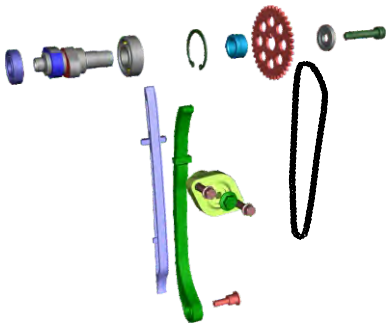

Pictorial Index

pulsar NS160 EURO III / IV

PLATE NO. : 5 CYLINDER & PISTON	PAGE NO. 9

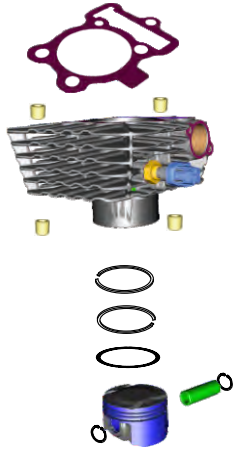

PLATE NO. : 6 CRANKSHAFT	PAGE NO. 11

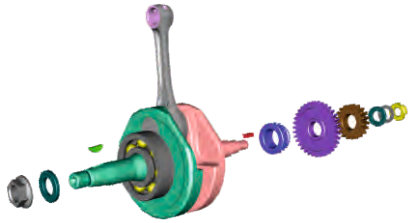

PLATE NO. : 7 BALANCER ASSEMBLY	PAGE NO. 13

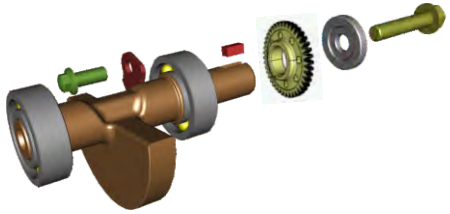

PLATE NO. : 8 TRANSMISSION	PAGE NO. 15



PLATE NO. : 9 TRANSMISSION - TWIN DISC	PAGE NO. 17



PLATE NO. : 10 CHANGE DRUM / SHIFT FORK	PAGE NO. 19

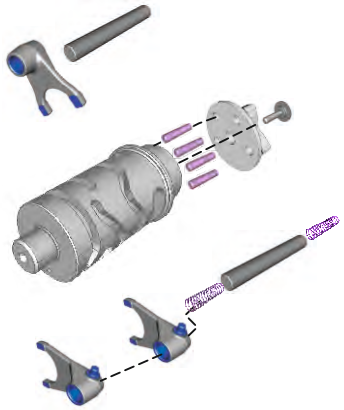

PLATE NO. : 11 GEAR CHANGE MECHANISM	PAGE NO. 21

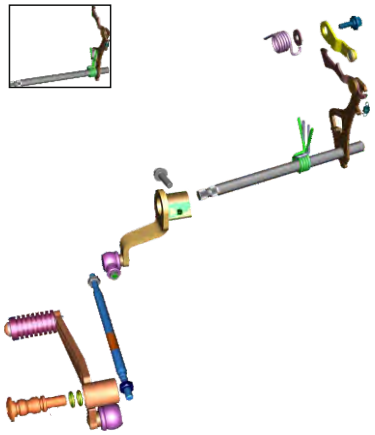

PLATE NO. : 12 ENGINE ASSEMBLY CRANKCASE RH	PAGE NO. 23

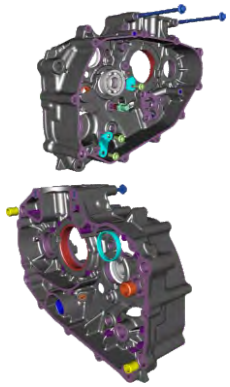

Pictorial Index

pulsar NS160 EURO III / IV

PLATE NO. : 13 CRANKCASE LH	PAGE NO. 25



PLATE NO. : 14 OIL PUMP	PAGE NO. 27

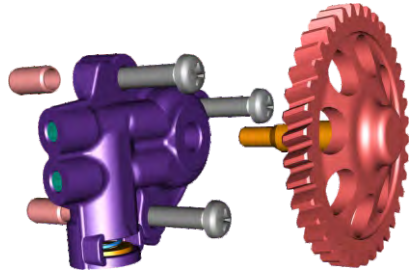

PLATE NO. : 15 KICK ASSEMBLY	PAGE NO. 29

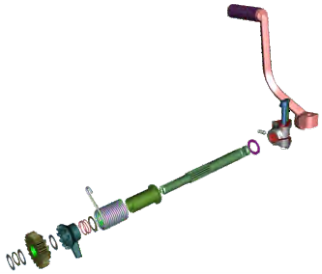

PLATE NO. : 16 COVER CLUTCH	PAGE NO. 31

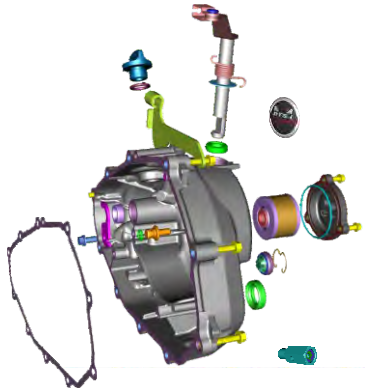

PLATE NO. : 17 OIL COOLER	PAGE NO. 33

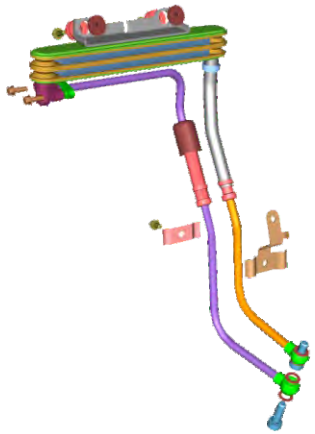

PLATE NO. : 18 COVER MAGNETO	PAGE NO. 35

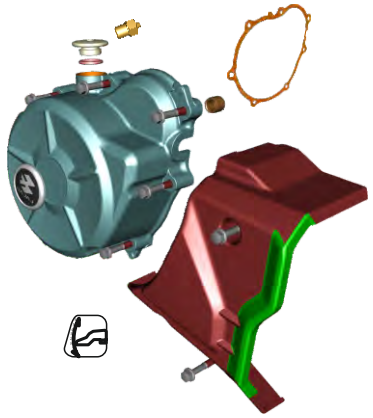

PLATE NO. : 19 CLUTCH ASSEMBLY	PAGE NO. 37

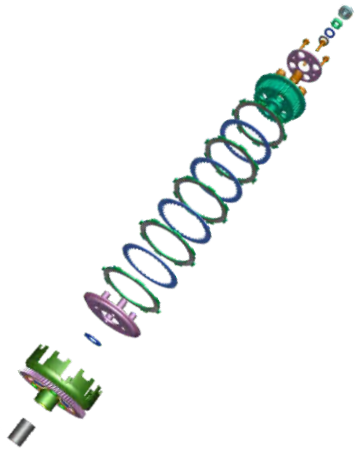

PLATE NO. : 20 STARTER ASSEMBLY	PAGE NO. 39

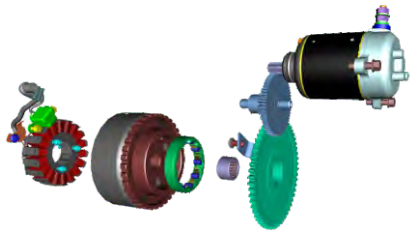

Pictorial Index

pulsar NS160 EURO III / IV

PLATE NO. : 21 REGULATOR ASSEMBLY & H T COIL	PAGE NO. 41

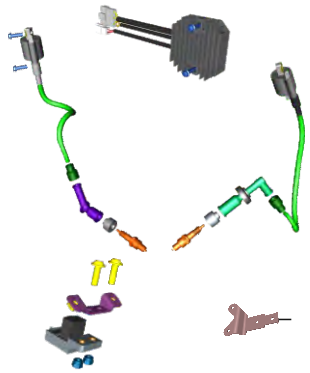

PLATE NO. : 22 THROTTLE BODY	PAGE NO. 43

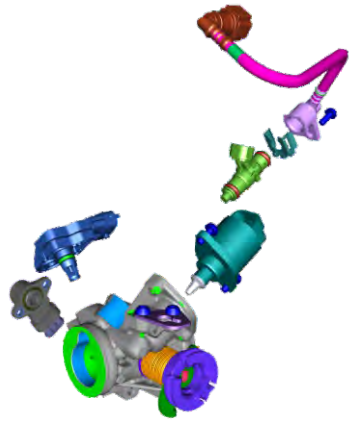

PLATE NO. : 23 AIR CLEANER COMPLETE	PAGE NO. 45

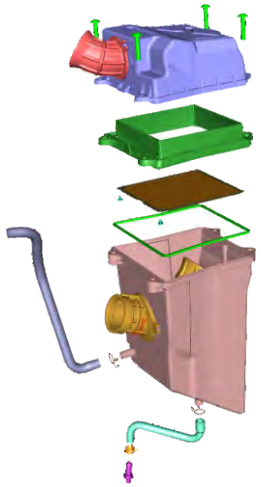

PLATE NO. : 24 EVAP EURO IV	PAGE NO. 47

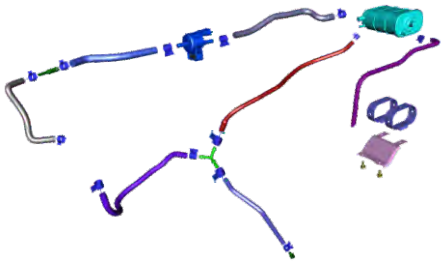

PLATE NO. : 25 SILENCER ASSEMBLY	PAGE NO. 49

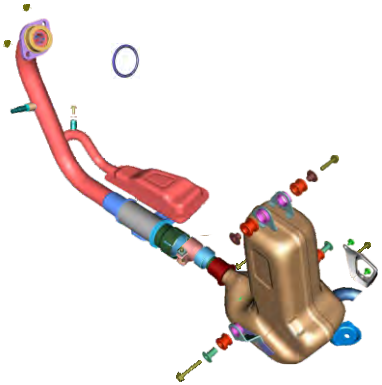

PLATE NO. : 26 SEAT ASSEMBLY / SEAT LOCK	PAGE NO. 51

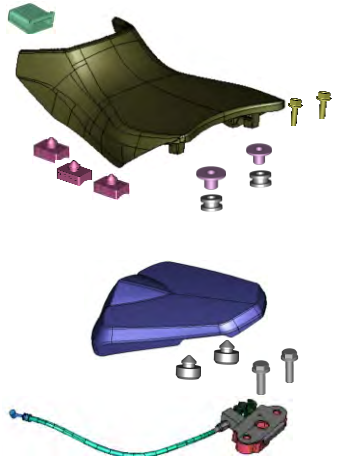

PLATE NO. : 27 ENGINE MOUNTINGS	PAGE NO. 53

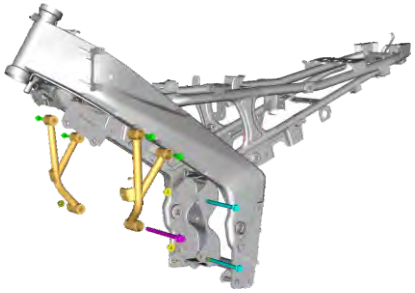

PLATE NO. : 28 FRAME & FRAME FITTINGS	PAGE NO. 55

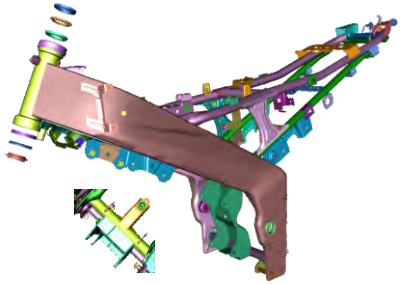

Pictorial Index

pulsar NS160 EURO III / IV

PLATE NO. : 29 SWING ARM/REAR SHOCK ABSORBER	PAGE NO. 57

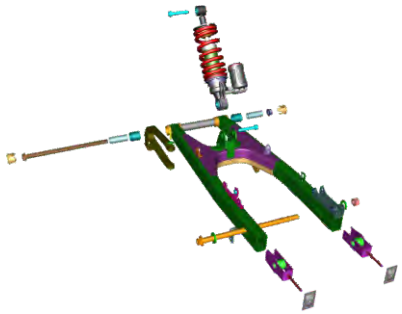

PLATE NO. : 30 PILLION FOOT REST / HOLDER	PAGE NO. 59

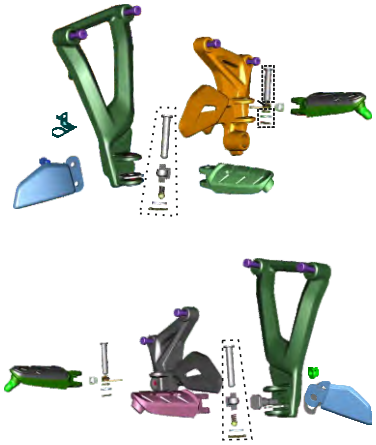

PLATE NO. : 31 MUD GUARD - FRONT & REAR	PAGE NO. 61

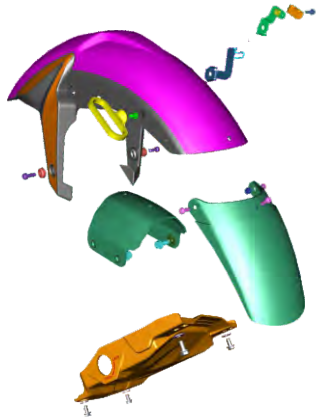

PLATE NO. : 32 STAND ASSEMBLY	PAGE NO. 63

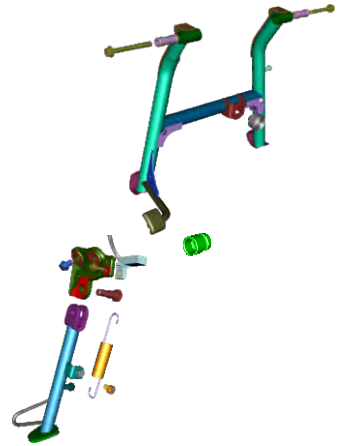

PLATE NO. : 33 TUBE / TYRE / RIM	PAGE NO. 65



PLATE NO. : 34 FRONT HUB NON ABS EURO III	PAGE NO. 67



PLATE NO. : 35 FRONT HUB ABS EURO IV	PAGE NO. 69



PLATE NO. : 36 FRONT MASTER CYLINDER	PAGE NO. 71

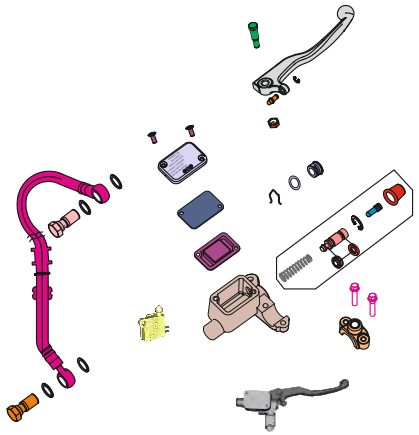

Pictorial Index

pulsar NS160 EURO III / IV

PLATE NO. : 37 REAR MASTER CYLINDER	PAGE NO. 73



PLATE NO. : 38 FRONT CALIPER	PAGE NO. 75

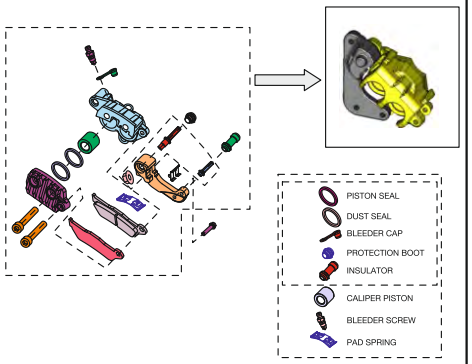

PLATE NO. : 39 REAR CALIPER	PAGE NO. 77



PLATE NO. : 40 ANTI BRAKE LOCK SYSTEM (SINGLE DISC)	PAGE NO. 79

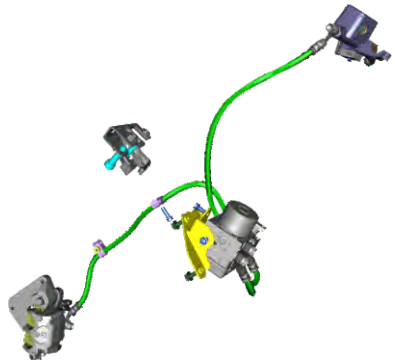

PLATE NO. : 41 ANTI BRAKE LOCK SYSTEM (TWIN DISC)	PAGE NO. 81

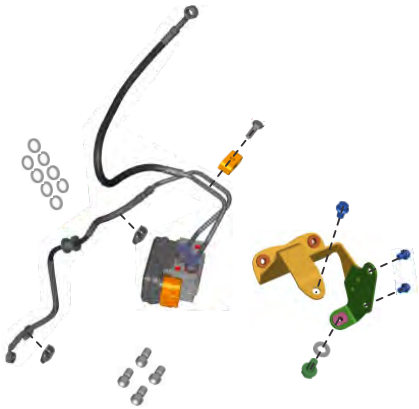

PLATE NO. : 42 REAR HUB - SINGLE DISC	PAGE NO. 83

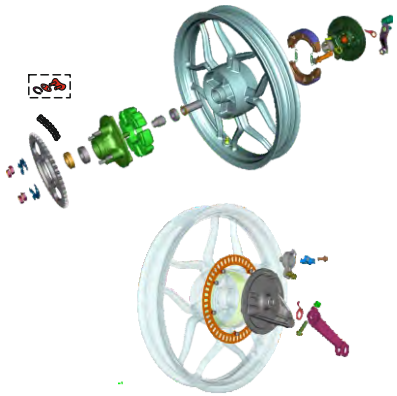

PLATE NO. : 43 REAR HUB - TWIN DISC	PAGE NO. 85

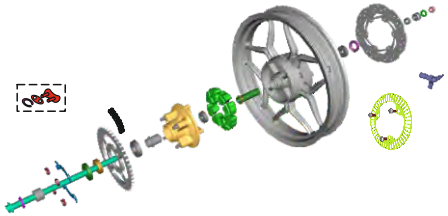

PLATE NO. : 44 REAR BRAKE PEDAL	PAGE NO. 87

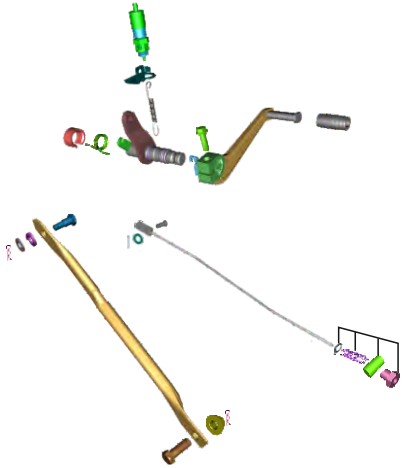

Pictorial Index

pulsar NS160 EURO III / IV

PLATE NO. : 45 HANDLE BAR ASSEMBLY	PAGE NO. 89

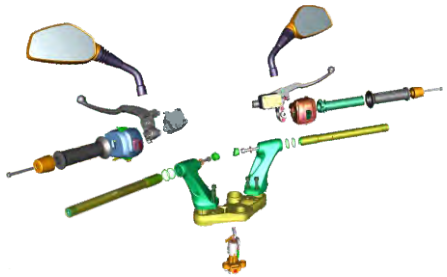

PLATE NO. : 46 FRONT FORK	PAGE NO. 91

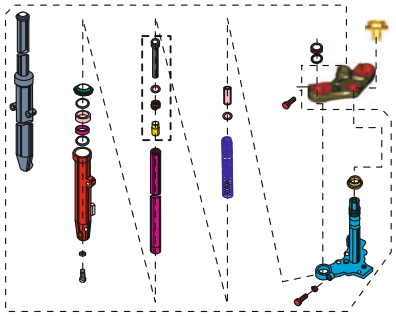

PLATE NO. : 47 RADIATOR COVERS	PAGE NO. 93

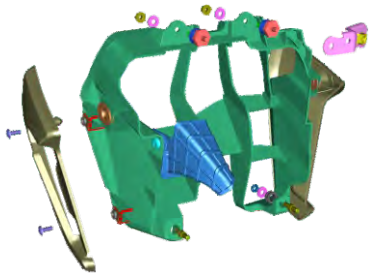

PLATE NO. : 48 FUEL TANK ASSEMBLY	PAGE NO. 95



PLATE NO. : 49 FUEL PUMP ASSLY	PAGE NO. 97



PLATE NO. : 50 FITTING - PETROL TANK COVER & FLAP	PAGE NO. 99

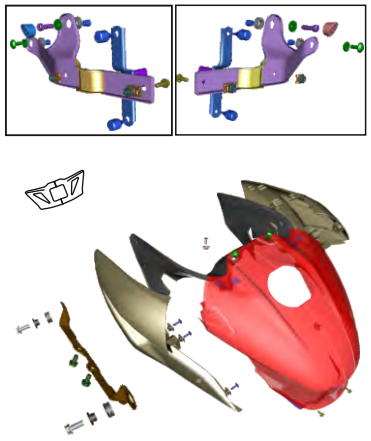

PLATE NO. : 51 FITTING - SIDE COVER & SEAT COWL	PAGE NO. 101

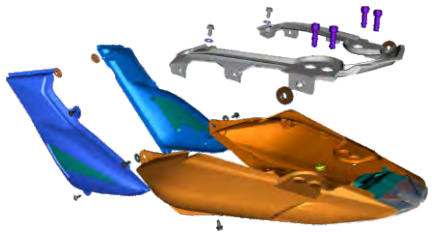

PLATE NO. : 52 METER ASSEMBLY	PAGE NO. 103

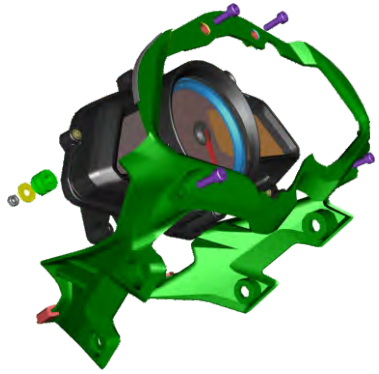

Pictorial Index

pulsar NS160 EURO III / IV

PLATE NO. : 53 CONTROL CABLES	PAGE NO. 105

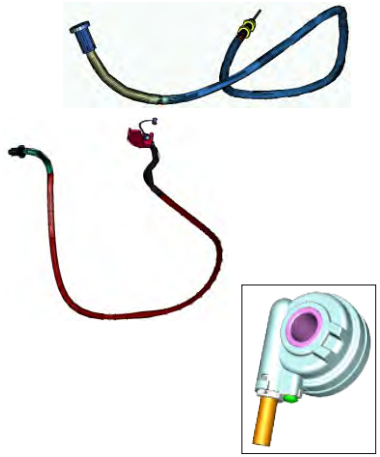

PLATE NO. : 54 CHAIN CASE & HUGGER REAR	PAGE NO. 107

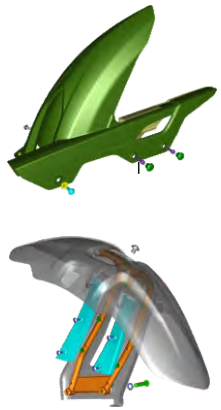

PLATE NO. : 55 BELLY PAN MOUNTING	PAGE NO. 109

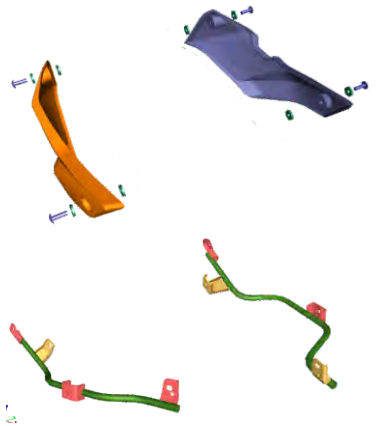

PLATE NO. : 56 HEAD LAMP & FAIRING	PAGE NO. 111

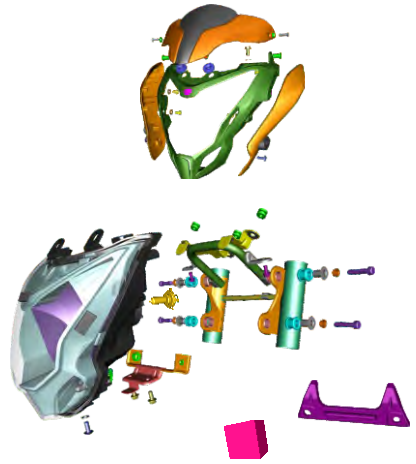

PLATE NO. : 57 INDICATOR LIGHT ASSEMBLY	PAGE NO. 113

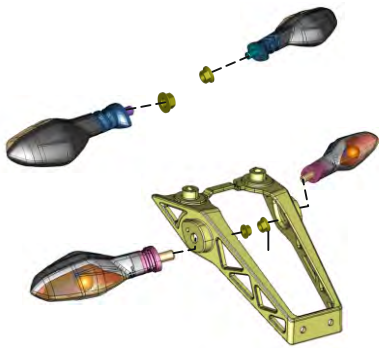

PLATE NO. : 58 TAIL LAMP ASSEMBLY / FRONT NUMBER PLATE	PAGE NO. 115

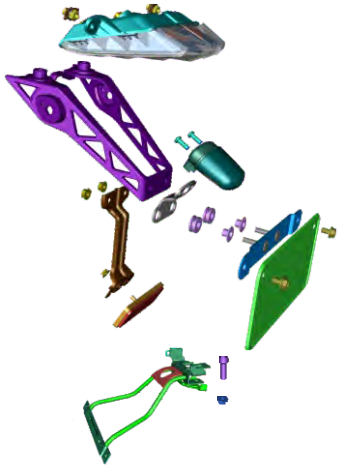

PLATE NO. : 59 ELECTRICAL	PAGE NO. 117

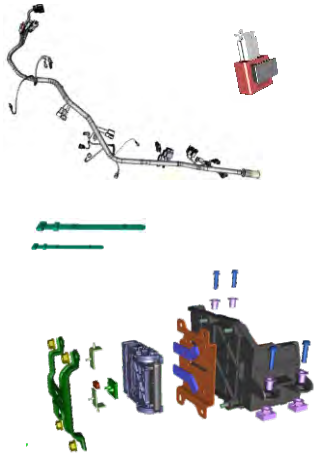

PLATE NO. : 60 ELECTRICAL EQUIPMENTS	PAGE NO. 119

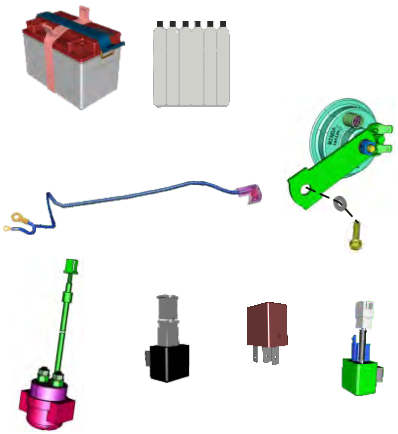

Pictorial Index

pulsar NS160 EURO III / IV

PLATE NO. : 61 TOOL KIT	PAGE NO. 121

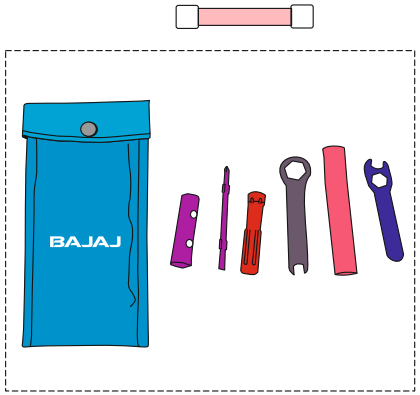

PLATE NO. : 62 ACCESSORIES / GRAB HANDLE	PAGE NO. 123

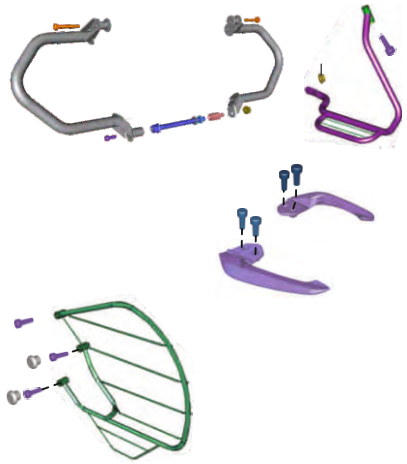

PLATE NO. : 63 PAINTED PARTS	PAGE NO. 125,127

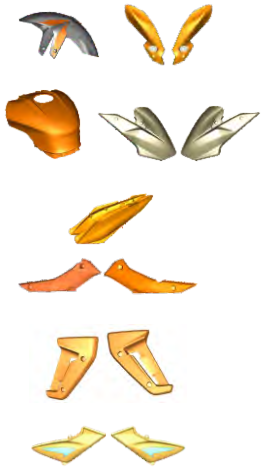

PLATE NO. : 64 DECALS SETS	PAGE NO. 129,132

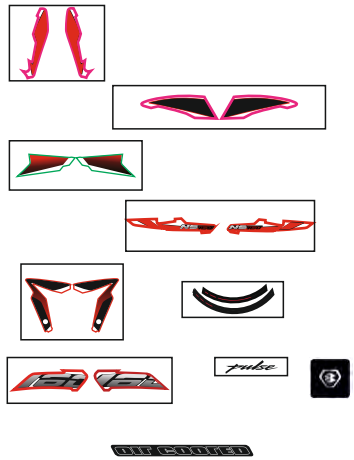

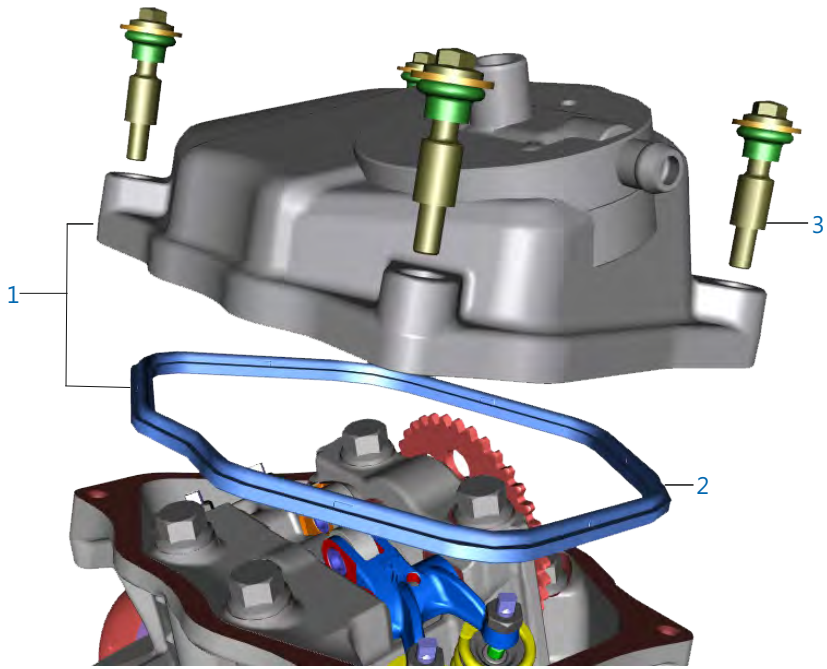

Plate No.: 1

Cover Cylinder Head

No.	Part No.	Description	Single Disc	Twin Disc	Remarks
1	52 JE02 31	Assembly Cover Cylinder Head	1	–	
	52 JE00 74	Assembly Head Cover Without Gasket	–	1	
2	JE 5110 38	Gasket Head Cover	1	1	
3	JE 5110 53	Assembly Bolt Head Cover	4	4	

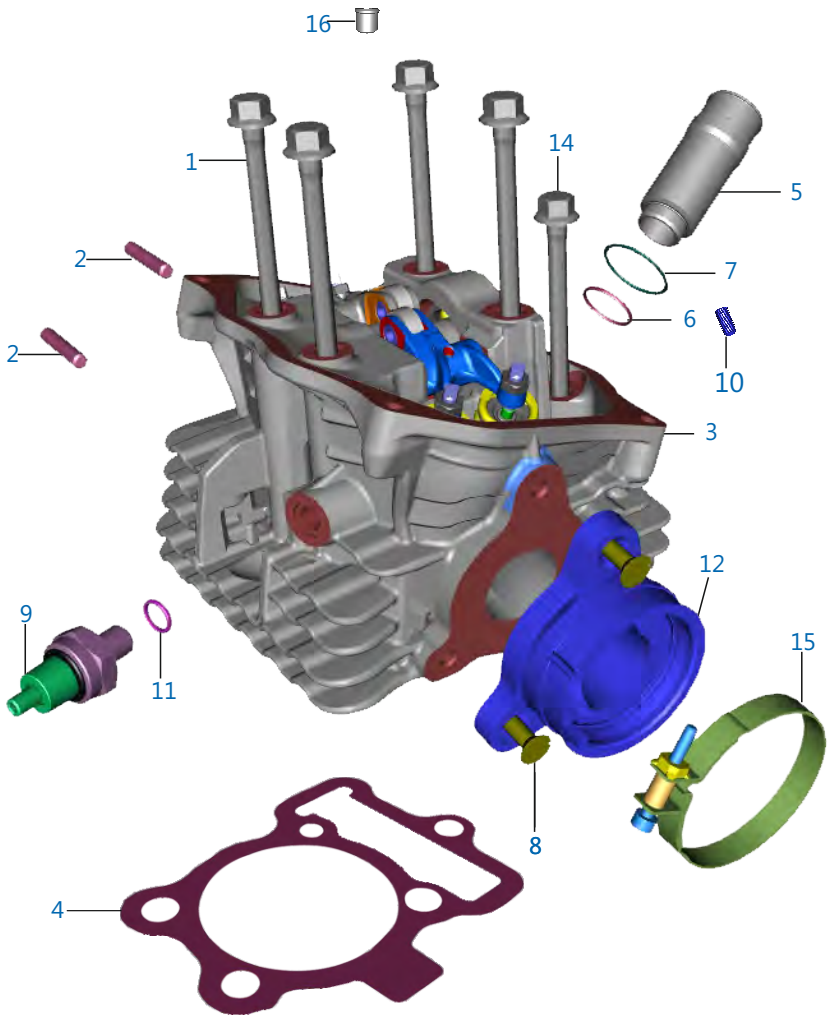

Plate No.: 2

Cylinder Head

No.	Part No.	Description	Single Disc	Twin Disc	Remarks
1	JE 5110 47	Hex Flange Head Bolt M10	4	4	
2	39 1660 05	M6 Stud Bolt	2	2	
3	JE 5110 59	Cylinder Head	1	1	
4	JE 5110 85	Gasket Cylinder Head	1	1	
5	JB 5110 18	Sleeve Spark Plug	1	–	
	JF 5110 52	Sleeve Spark Plug	–	1	
6	39 2629 21	O Ring	1	–	
	KJ AC18 24	O Ring	–	1	
7	39 1283 21	'O' Ring Sleeve	1	1	
8	LB C000 02	Screw CSK Cross	3	3	
9	JE 3514 00	Switch Oil Pressure	1	1	
10	39 2608 01	Grub Screw	1	1	
11	DK 1013 40	O Ring	1	1	
12	JE 5814 09	Pipe Intake	1	1	
13	JG 5814 07	O Ring Manifold	1	1	N.I
14	59 0400 50	Bolt	1	1	
15	JU 5810 06	Clamp Connecting Tube	2	2	
16	JE 5110 52	Nozzle Head	1	1	

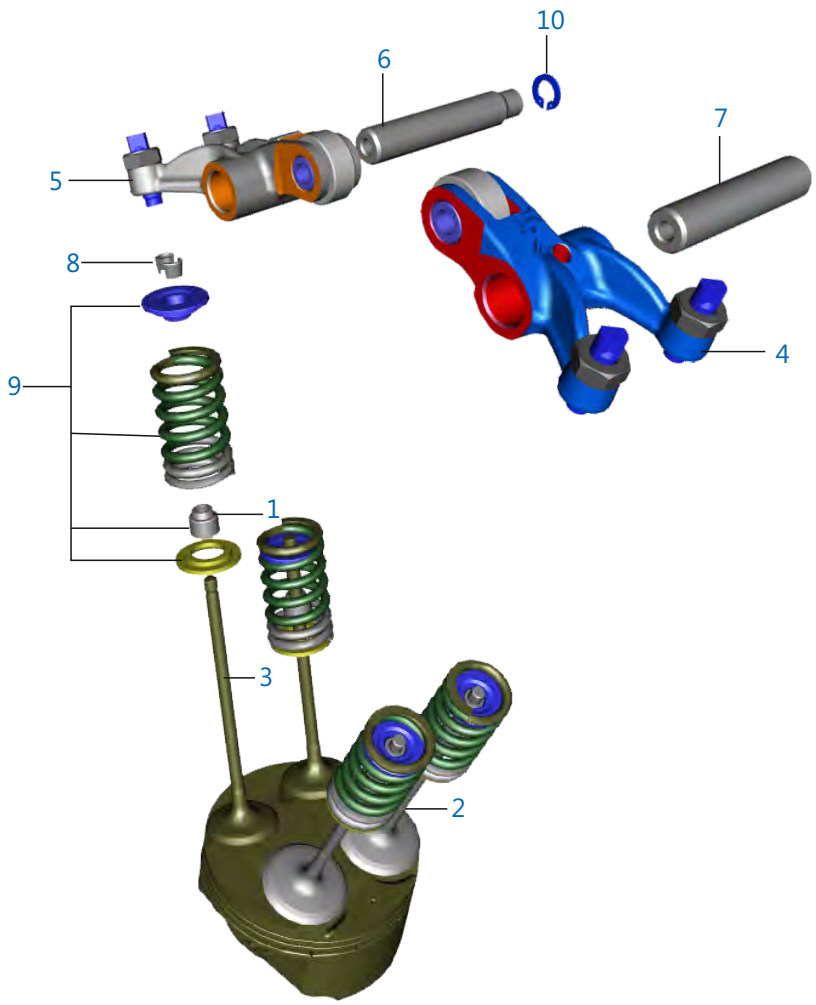

Plate No.: 3

Valve

No.	Part No.	Description	Single Disc	Twin Disc	Remarks
1	39 2017 19	Seal - Oil	4	4	
2	JE 5112 08	Valve Intake	2	2	
3	JE 5112 09	Valve Exhaust	2	2	
4	JE 5112 12	Assembly Rocker Arm Intake	1	1	
5	JE 5112 13	Assembly Rocker Arm Exhaust	1	1	
6	JE 5112 25	Shaft Rocker Exhaust	1	1	
7	JE 5112 21	Shaft Rocker	1	1	
8	DG 1010 29	Cotter Valve	8	8	
9	36 JF00 25	Valve Repair Kit	1	1	
10	JE 5110 60	Circlip	1	1	

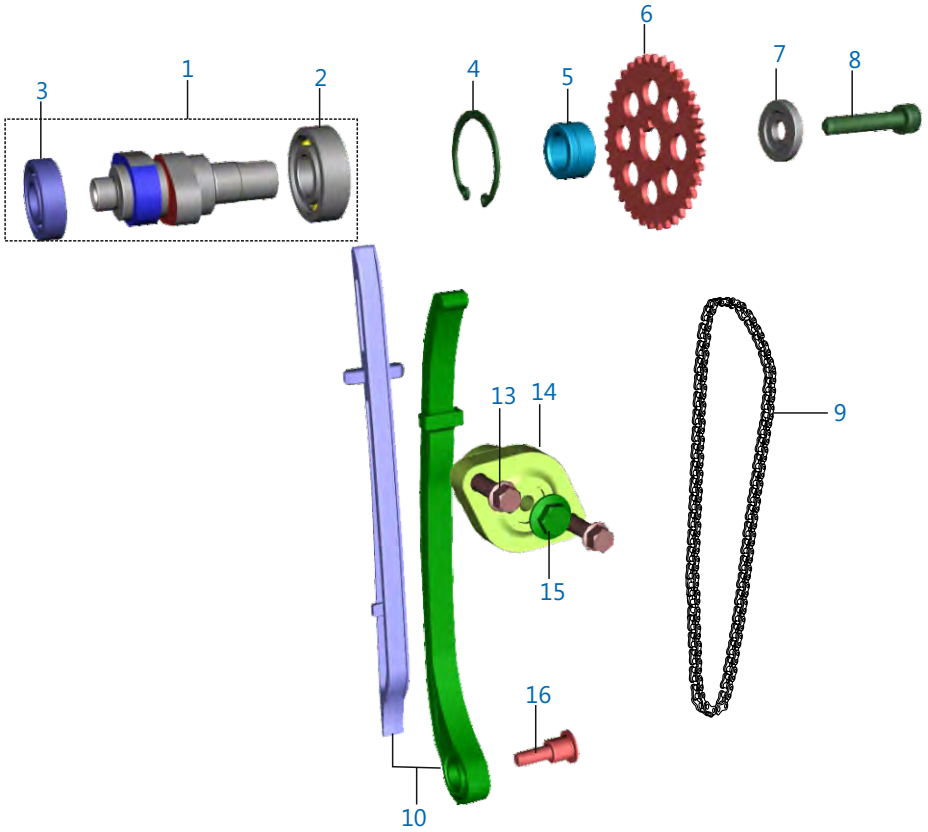

Plate No.: 4

Camshaft / Tensioner

No.	Part No.	Description	Single Disc	Twin Disc	Remarks
1	JE 5112 51	Camshaft Assembly	1	–	
	JE 5112 45	Camshaft Assembly	–	1	
2	JG 5312 20	Bearing - Ball 6202/HN3	1	1	
3	AP 1012 36	Bearing - Ball :- 12 X 28 X 8	1	1	
4	39 0594 17	Circlip - Internal	1	1	
5	JE 5112 41	Spacer Camshaft	1	1	
6	JE 5112 34	Sprocket Camshaft	1	1	
7	DH 1010 48	Special Camshaft Washer	1	1	
8	DK 1013 86	Hex Socket Head Cap Bolt	1	1	
9	JE 5112 33	Timing Chain	1	1	
10	36 JF00 05	Kit Chain Guide	1	1	
11	CS 1011 28	Gasket	1	1	N.I
12	39 2669 21	Ring - O (Tensioner Bolt)	1	1	N.I.
13	39 1673 04	Bolt Hexagonal	2	2	
14	JE 5210 16	Chain Tensioner	1	1	
15	DD 1010 62	Bolt Tensioner	1	1	
16	DH 1013 92	Cam Chain Tensioner Pivot Bolt	1	1	

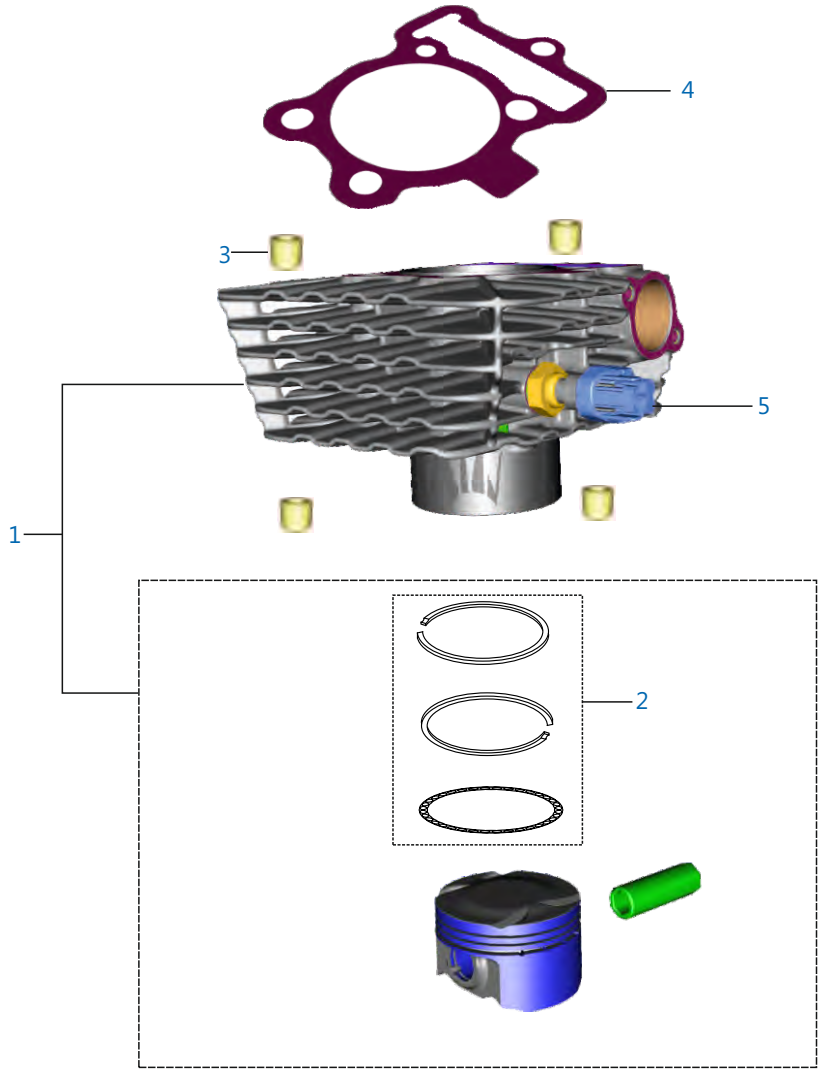

Plate No.: 5

Cylinder and Piston

No.	Part No.	Description	Single Disc	Twin Disc	Remarks
1	36 JF01 17	Kit Asly Block Piston	1	1	
2	36 JF00 42	Kit Piston Ring	1	1	
3	39 1000 06	Pin - Hollow Dowel :- 14 X 20	4	4	
4	JE 5210 30	Gasket Cylinder Block	1	1	
5	JE 3514 03	Thermal Sensor	1	1	

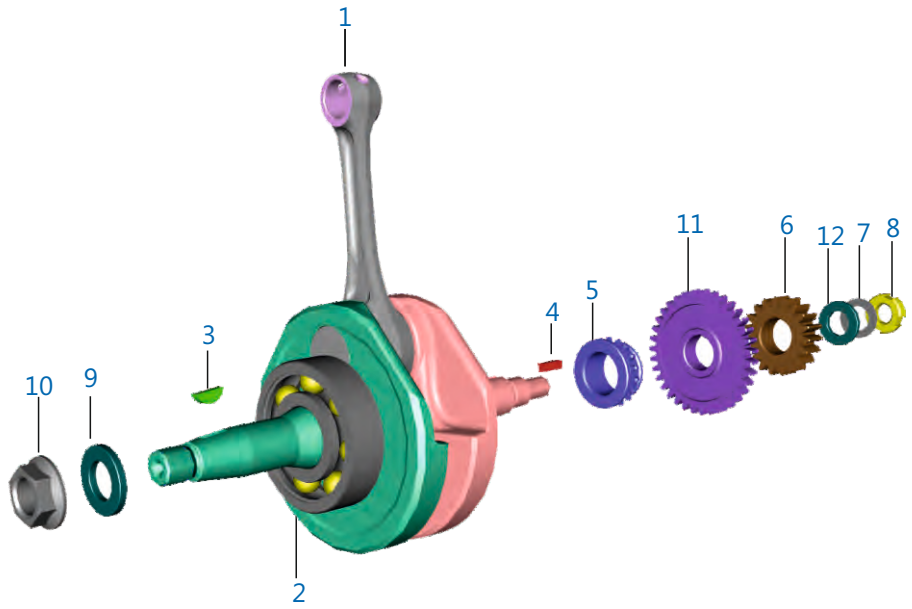

Plate No.: 6

Crankshaft

No.	Part No.	Description	Single Disc	Twin Disc	Remarks
1	JE 5310 40	Crankshaft Assembly	1	–	
	JE 5310 52	Crankshaft Assembly	–	1	
2	KP BF63 05	Bearing Ball C3 Clearance	2	2	
3	31 1011 73	Key Wood Ruff	1	1	
4	LF B000 01	Key Sunk	1	1	
5	JE 5310 33	Sprocket Crank Shaft	1	1	
6	JE 5310 45	Gear Primary Driven	1	1	
7	39 2200 11	Washer Primary Drive Gear	1	1	
8	LC D000 01	Nut Primary Drive Lock	1	1	
9	DH 1010 48	Washer	1	1	
10	59 1500 14	Nut Flange	1	1	
11	JE 5512 13	Balancer Gear	1	1	
12	LD A000 25	Plain Washer	1	1	

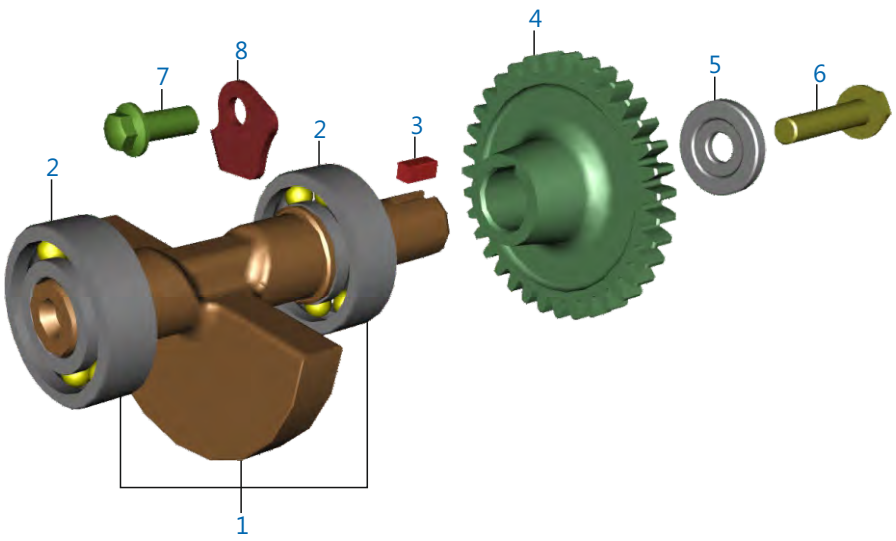

Plate No.: 7

Balancer Assembly

No.	Part No.	Description	Single Disc	Twin Disc	Remarks
1	JE 5312 02	Assembly Balancer	1	1	
2	JG 5312 20	Bearing Ball	1	1	
3	DS 1011 54	Key	1	1	
4	JE 5512 14	Balancer Driven Gear	1	1	
5	DH 1010 48	Special Camshaft Washer	1	1	
6	LA D001 04	Bolt Flanged	1	1	
7	LA E000 15	Bolt Falnged	1	1	
8	JA 5410 10	Stopper Plate Input Bearing	1	1	

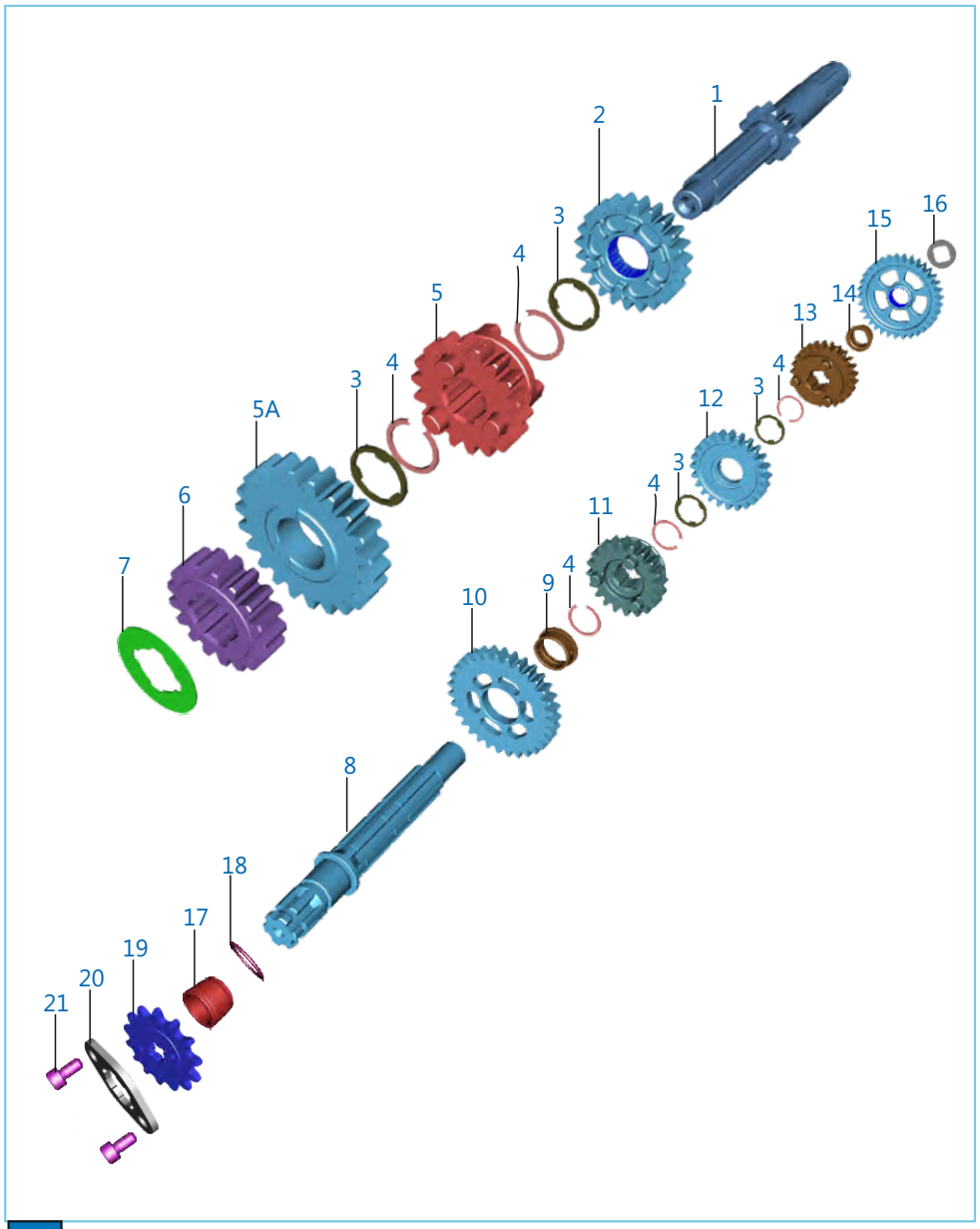

Plate No.: 8

Transmission - Single Disc

No.	Part No.	Description	Single Disc	Twin Disc	Remarks
1	JE 5510 01	Shaft Input	1	–	
2	JE 5512 02	Gear 4th Drive	1	–	
3	JA 5510 02	Spline Washer	4	–	
4	39 0987 17	Ring - Snap	5	–	
5	JE 5512 01	Gear 3rd Drive	1	–	
5A	JE 5512 03	Gear 5th Drive	1	–	
6	JE 5512 00	Gear 2nd Drive	1	–	
7	JA 5510 04	Washer Thrust 2nd Drive	1	–	
8	JZ 5510 08	Shaft Output	1	–	
9	JZ 5512 10	Bush Gear 2nd Driven	1	–	
10	JE 5512 05	Gear 2nd Driven	1	–	
11	JE 5512 08	Gear 5th Driven	1	–	
12	JE 5512 06	Gear 3rd Driven	1	–	
13	JE 5512 16	Gear 4th Driven	1	–	
14	JZ 5512 05	Bush 1st Driven	1	–	
15	JE 5512 15	Gear 1st Driven	1	–	
16	JA 5510 08	Washer Thrust	1	–	
17	JA 5510 09	Collar Sprocket Drive	1	–	
18	59 2100 24	'O' Ring	1	–	
19	JV 5510 00	Sprocket Output	1	–	
20	DU 1012 13	Plate Lock-Sprocket Output	1	–	
21	LA C000 69	Bolt Flanged	1	–	

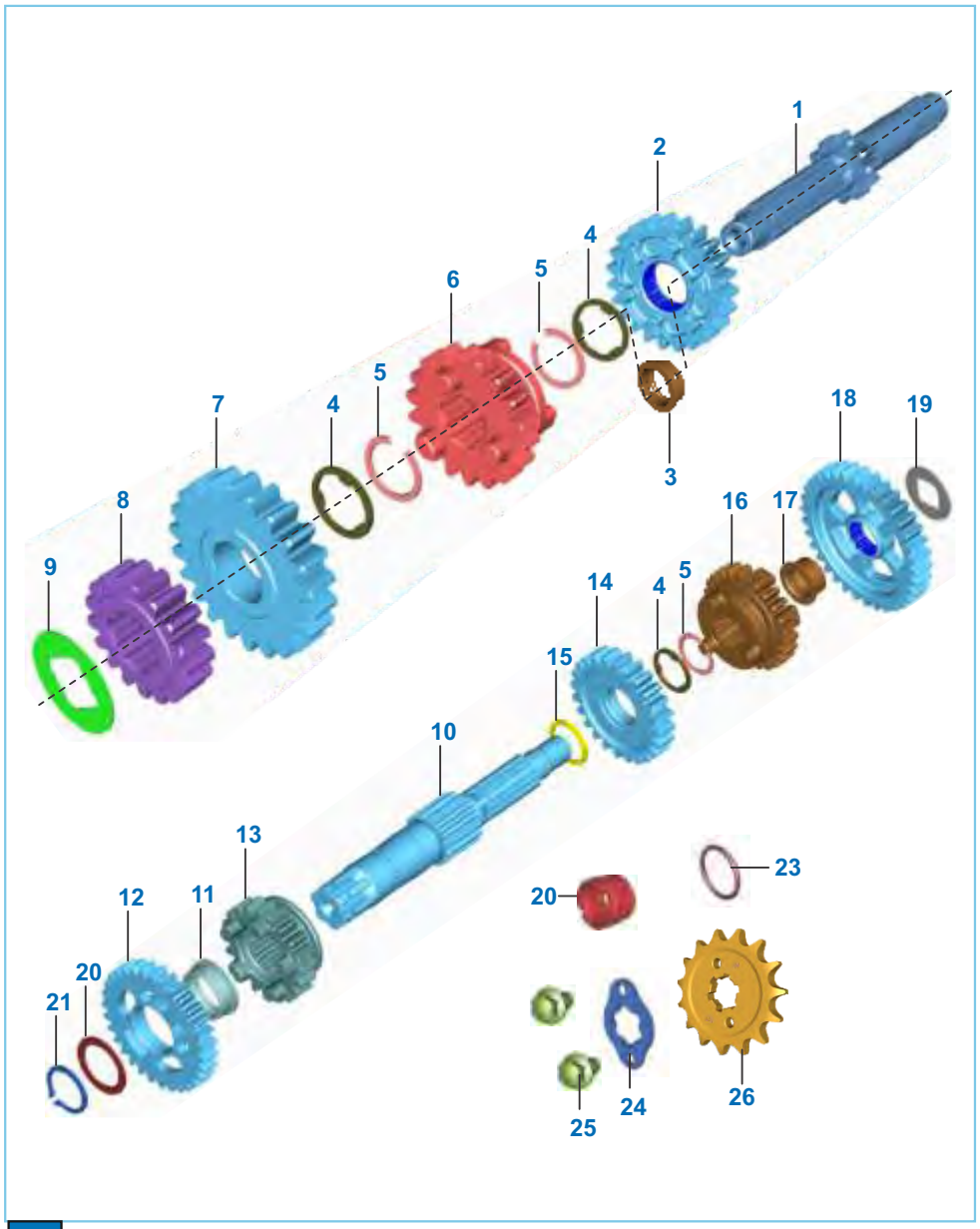

Plate No.: 9

Transmission - Twin Disc

No.	Part No.	Description	Single Disc	Twin Disc	Remarks
1	JE 5510 01	Shaft Input	–	1	
2	JE 5512 02	Gear 4th Drive	–	1	
3	JH 5512 05	Bush Gear 2nd Driven	–	1	
4	JA 5510 02	Spline Washer	–	4	
5	39 0987 17	Ring Snap	–	5	
6	JE 5512 01	Gear 3rd Drive	–	1	
7	JE 5512 03	Gear 5th Drive	–	1	
8	JE 5512 00	Gear 2nd Drive	–	1	
9	JA 5510 04	Washer Thrust 2nd Drive	–	1	
10	JH 5510 01	Shaft output	–	1	
11	JH 5512 05	Bush 2nd driven	–	1	
12	JH 5512 04	Gear 2nd Driven	–	1	
13	JH 5512 06	Gear 5th Driven	–	1	
14	JE 5512 06	Gear 3rd Driven	–	1	
15	JH 5512 03	Washer gear 3rd driven	–	1	
16	JE 5512 16	Gear 4th Driven	–	1	
17	JE 5512 12	Bush 1st Gear driven	–	1	
18	JE 5512 15	Gear 1st Driven	–	1	
19	JE 5512 11	Washer 1MM	–	1	
20	39 2166 11	Washer - Plain	–	2	
21	DH 1012 35	Circlip ext	–	1	
22	JH 5510 02	Collar Sprocket Drive	–	1	
23	30 1010 61	O-Ring	–	1	
24	JH 5512 02	Plate Lock - Sprocket Output	–	1	
25	DS 1013 55	Bolt Socket	–	2	
26	JH 5512 09	Sprocket Output 15T	–	1	

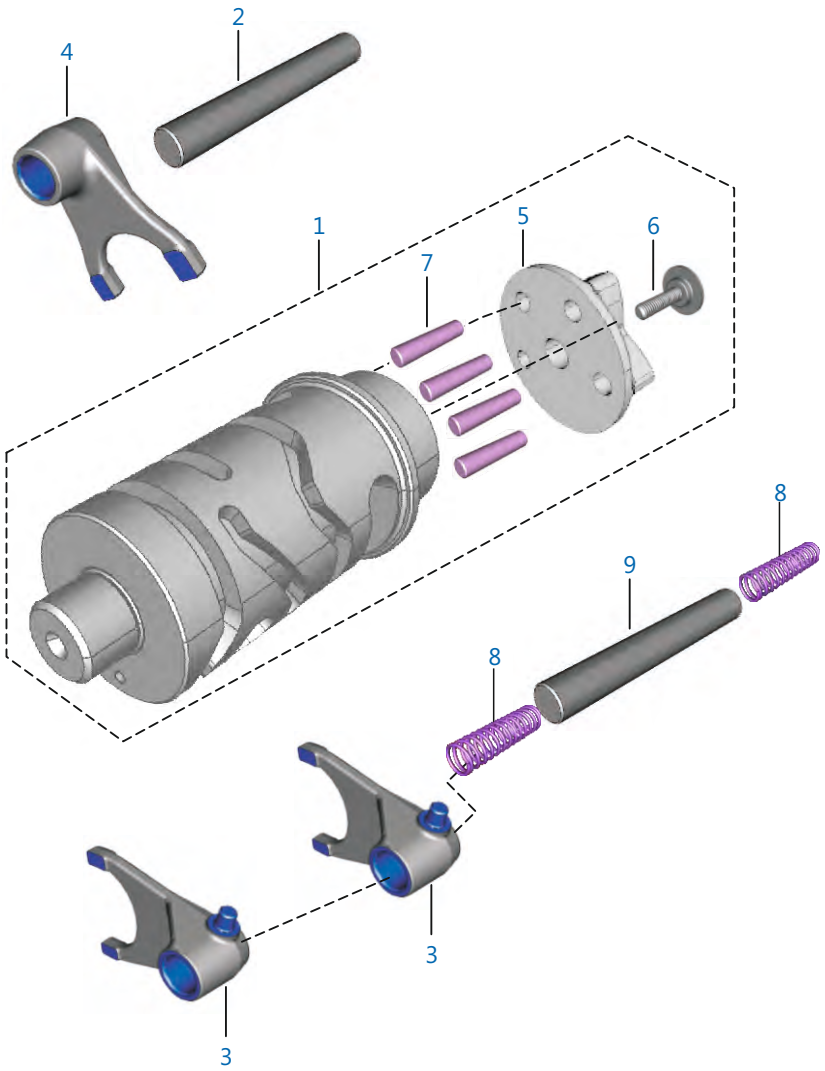

Plate No.: 10

Change Drum / Shift Fork

No.	Part No.	Description	Single Disc	Twin Disc	Remarks
1	JE 5610 06	Drum Comp Gear Shift	1	1	
2	JD 5610 06	Shaft Gear Fork Shift	1	1	
3	JD 5610 04	Fork Gear Shift Output	2	2	
4	JZ 5610 02	Fork Input Disco-H	1	1	
5	JE 5610 05	Cam Drum Change	1	1	
6	JD 5610 11	Special bolt	1	1	
7	39 0992 06	Dowel	4	4	
8	JY 5410 39	Spring	2	2	
9	JE 5610 04	Shaft Output	1	1	

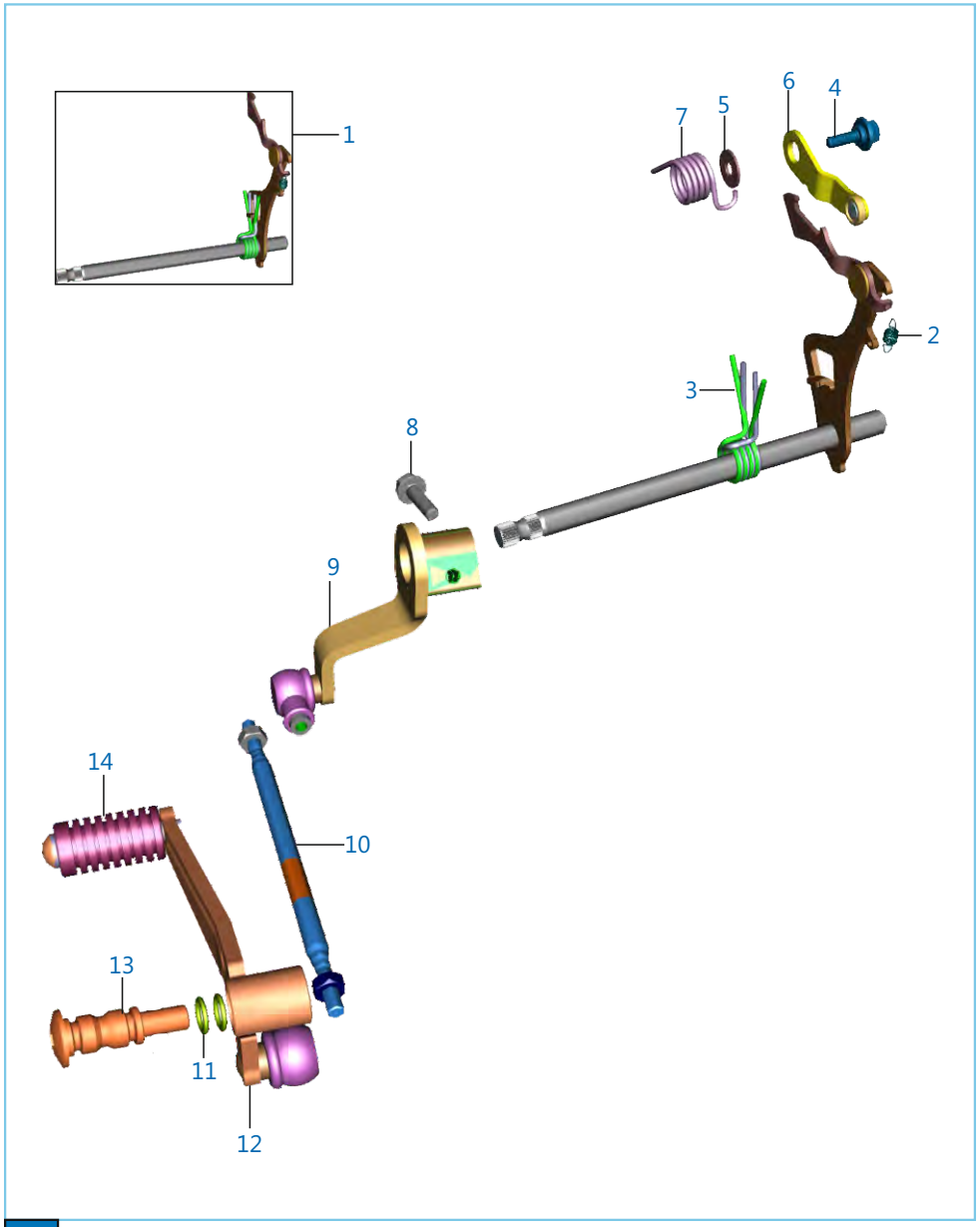

Plate No.: 11

Gear Change Mechanism

No.	Part No.	Description	Single Disc	Twin Disc	Remarks
1	52 JZ02 64	Lever Comp Gear Shift	1	–	
	52 JF00 21	Lcgs With Spring Assly K11	–	1	
2	JW 5612 06	Extension Spring	1	1	
3	JE 5612 00	Spring Gear Shift Return	1	1	
4	BF 5612 19	Bolt Detent Lever	1	1	
5	LD B000 44	Washer (Spring Steel)	1	1	
6	PA 5612 09	Inhibitor Comp Gear Shift	1	1	
7	JD 5612 04	Spring (Inhibitor)	1	1	
8	LA D001 31	Bolt Flanged-m10x1.5xl50xolv Grn	1	1	
9	JF 5612 04	Arm Change Ball Joint Assly	1	1	
10	52 JF00 89	Rod Tie	1	1	
11	01 1009 05	'O' Ring	2	2	
12	JF 5612 05	Lever Assly Gear Shift Comp	1	1	
13	JL 5614 09	Bolt Gear Change Lever	1	1	
14	DH 1015 09	Damper	1	1	

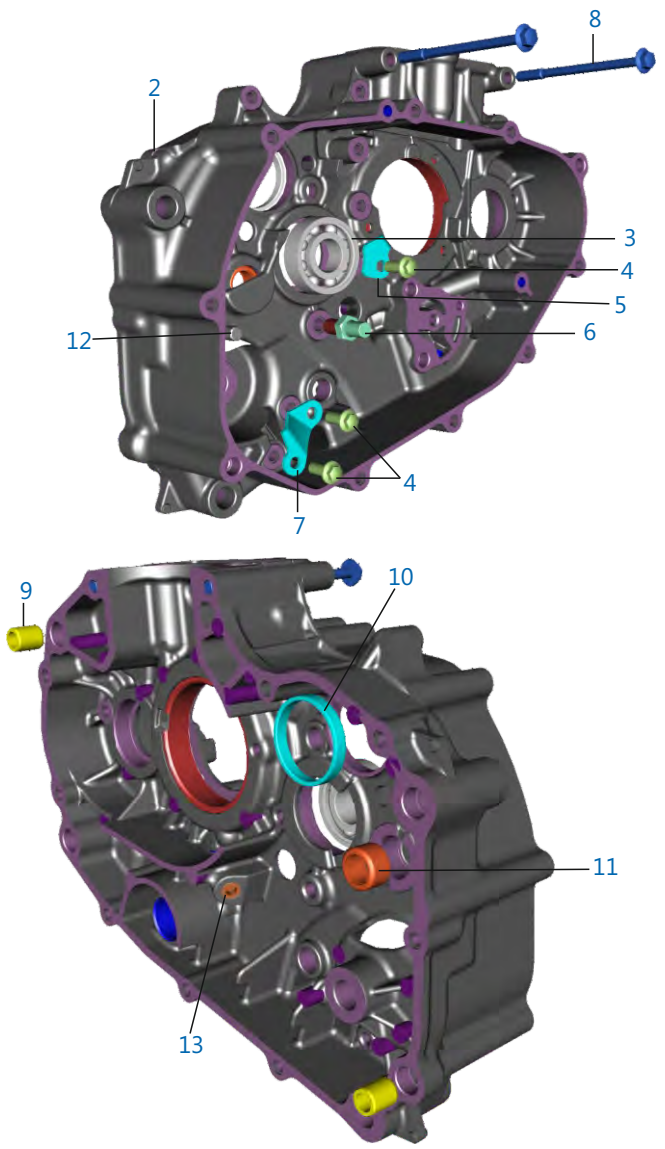

Plate No.: 12

Engine Assembly / Crankcase RH

No.	Part No.	Description	Single Disc	Twin Disc	Remarks
1	JE 5010 19	Assembly Engine K15	1	–	N.I.
	JE 5010 74	Engine Assembly	–	1	
2	36 JF01 30	Kit Crankcase RH	1	1	
3	59 2000 36	Bearing 28 X 68 X 18	1	1	
4	LA E000 15	Bolt Flange	3	3	
5	JA 5410 10	Stopper Plate Input Bearing	1	1	
6	52 JA00 29	Bolt Shift Change	1	1	
7	JA 5410 12	Kick Guide	1	1	
8	LA E000 25	Bolt	2	2	
9	39 0999 06	Dowel Pin	2	2	
10	PF 5410 18	Bushing Drum	1	1	
11	39 2562 20	Needle Roller Bearing	1	1	
12	JE 5410 28	Pin	1	1	
13	BA 1020 04	Plug	1	1	

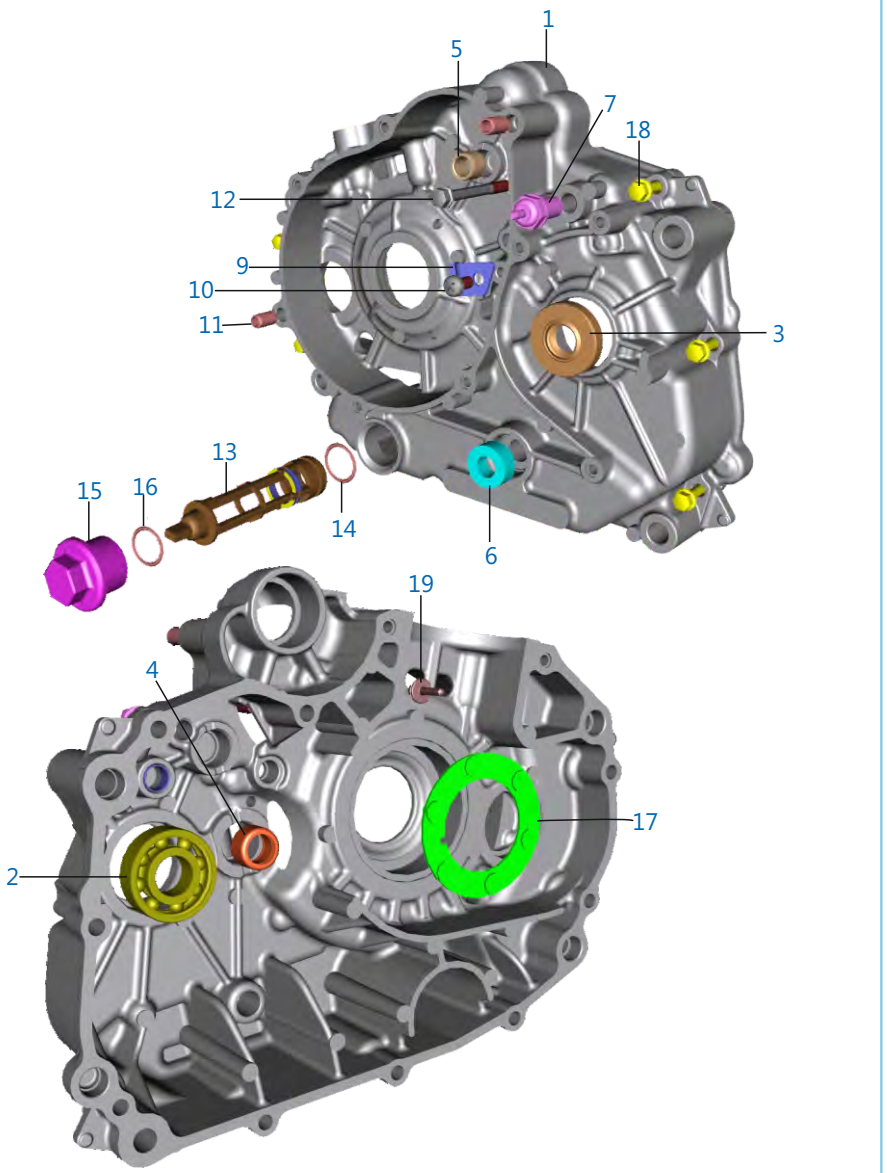

Plate No.: 13

Crankcase LH

No.	Part No.	Description	Single Disc	Twin Disc	Remarks
1	36 JF01 31	Kit Crankcase LH	1	–	
	JE 5410 82	Crankcase LH	–	1	
2	59 2000 36	Ball Bearing	1	1	
3	39 1715 19	Seal - Oil	1	–	
	39 2189 19	Seal - Oil	–	1	
4	39 2562 20	Bearing - Needle Roller	1	1	
5	JA 5410 05	Bush Bendix	1	1	
6	39 2190 19	Seal - Oil	1	1	
7	31 2010 81	Switch - Neutral	1	1	
8	DH 1017 84	Neutral Switch AL Washer	1	1	N.I
9	JE 6214 05	Stopper Gear Starter-	1	1	
10	DH 1013 80	Screw Pan Head- M6	1	1	
11	39 0999 06	Pin - Hollow Dowel	2	2	
12	LA E000 24	Bolt - M6 X 55	1	1	
13	JG 5710 24	Mesh Oil Filter Assy_G2	1	1	With 'O' ring
14	LJ A000 04	'O' Ring-Strainer	1	1	
15	JA 5410 21	Cap Strainer	1	1	
16	59 2100 23	'O' Ring Cap Strainer	1	1	
17	JE 5410 48	Damper	1	–	
18	JV 5410 07	Bolt Flanged-m6x1xl35xcl 8.8xbrt	8	8	
19	JE 5410 51	Nozzle Oil Jet	1	1	
20	JE 5410 63	Gasket Crankcase K11 UG	1	1	

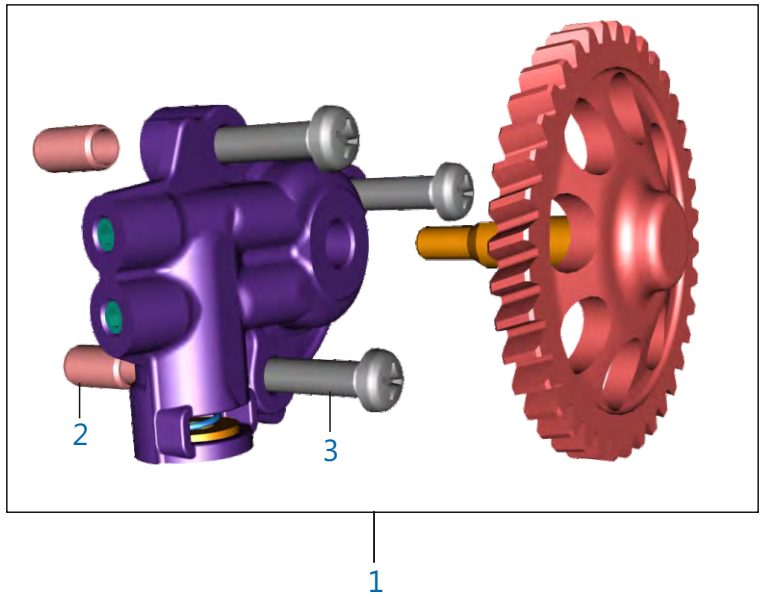

Plate No.: 14

Oil Pump

No.	Part No.	Description	Single Disc	Twin Disc	Remarks
1	JE 5710 09	Oil Pump Assy Comp	1	1	
2	39 0999 06	Pin - Hollow Dowel	2	2	Not a part of Assly
3	FD 1010 78	Pan Head Screw	3	3	Not a part of Assly

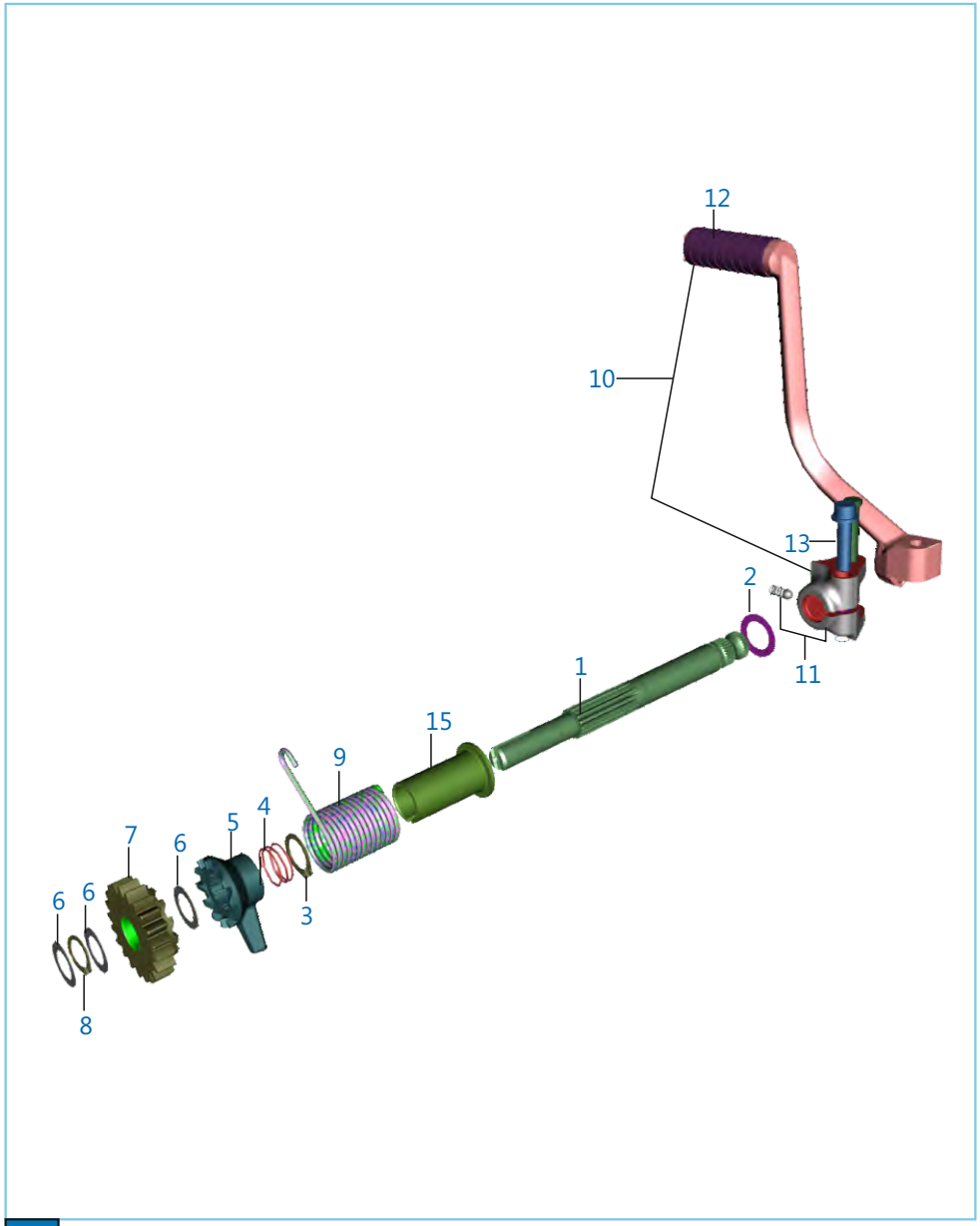

Plate No.: 15

Kick Assembly

No.	Part No.	Description	Single Disc	Twin Disc	Remarks
1	JE 6210 02	Kick Shaft	1	1	
2	JA 6210 06	Washer Thrust	1	1	
3	39 0738 17	Circlip	1	1	
4	DS 1011 17	Spring Kick Starter Ratchet	1	1	
5	JA 6210 02	Ratchet	1	1	
6	39 0993 11	Washer Plain	3	3	
7	JZ 6210 00	Assly Gear Starter Pinion	1	1	
8	39 2408 17	External Circlip	1	1	
9	JE 6210 03	Spring Kick Return	1	1	
10	JE 6212 03	Assembly Kick Lever	1	1	
11	36 JF00 07	Kit Boss Kick Lever	1	1	
12	DD 1010 97	Damper	1	1	
13	JA 6212 06	Bolt	1	1	
14	22 1502 41	Plain Washer	1	1	N.I
15	JE 6210 04	Sleeve	1	1	

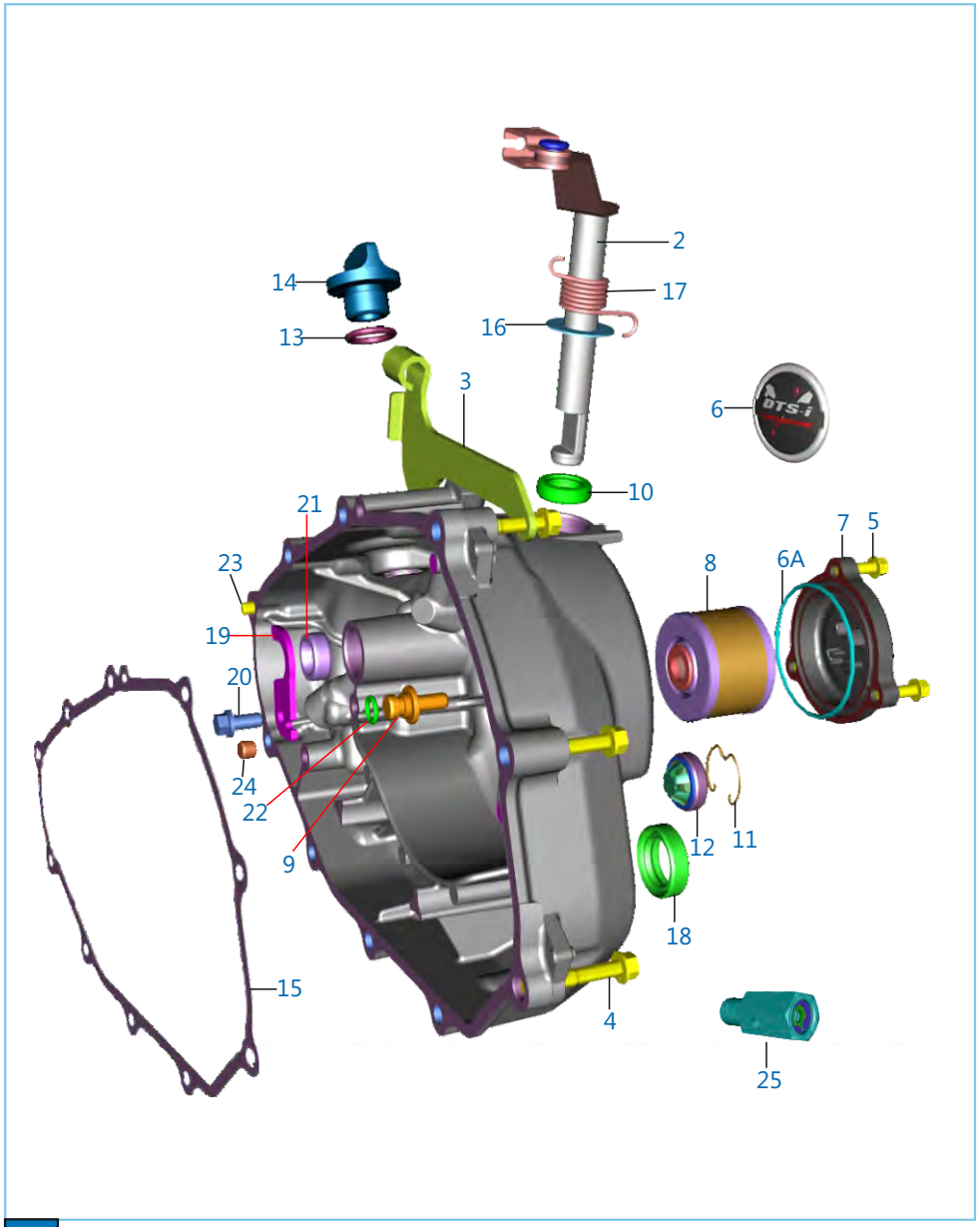

Plate No.: 16

Cover Clutch

No.	Part No.	Description	Single Disc	Twin Disc	Remarks
1	36 JE00 29	Kit Clutch Cover Slate Grey	1	1	
2	JV 5412 08	Shaft Clutch Release Assembly	1	–	
	JE 5412 71	Shaft Clutch Release Assembly	–	1	
3	JE 5412 44	Bracket Clutch Cable	1	1	
4	59 0400 38	Bolt - Flange	10	10	
5	39 1673 04	Bolt	3	3	
6	JE 5412 67	Decal Clutch Cover	1	1	
6A	39 1671 21	Ring - 'O'	1	1	
7	56 JE1X 3V	Cap Oil Filter (JE541234) "Slate Grey"	1	1	
8	JE 5710 07	Element Oil Filter	1	1	
9	JE 5514 08	Rod-Push	1	1	
10	39 1041 19	Seal - Oil	1	1	
11	DS 1012 15	Clip - Wire	1	1	
12	JL 5412 27	Gauge	1	1	
13	JA 5412 25	O Ring Cap Oil Filler	1	1	
14	JA 5412 11	Cap Oil Filler	1	1	
15	JE 5412 41	Gasket Clutch Cover	1	1	
16	39 2443 11	Plain Washer	1	1	
17	JH 5412 10	Spring Clutch Release Shaft	1	1	
18	30 1011 42	Seal - Oil	1	1	
19	JE 5412 49	Position Plate	1	1	
20	AA 1014 37	Bolt-Position Plate	1	1	
21	JE 5412 42	Seal Oil Crankshaft	1	1	
22	39 1561 21	O-Ring-Push Rod	1	1	
23	39 0999 06	Dowel pin	2	2	
24	BA 1020 04	Plug	1	1	
25	JE 5712 13	Assembly Pressure Relief Valve	1	1	

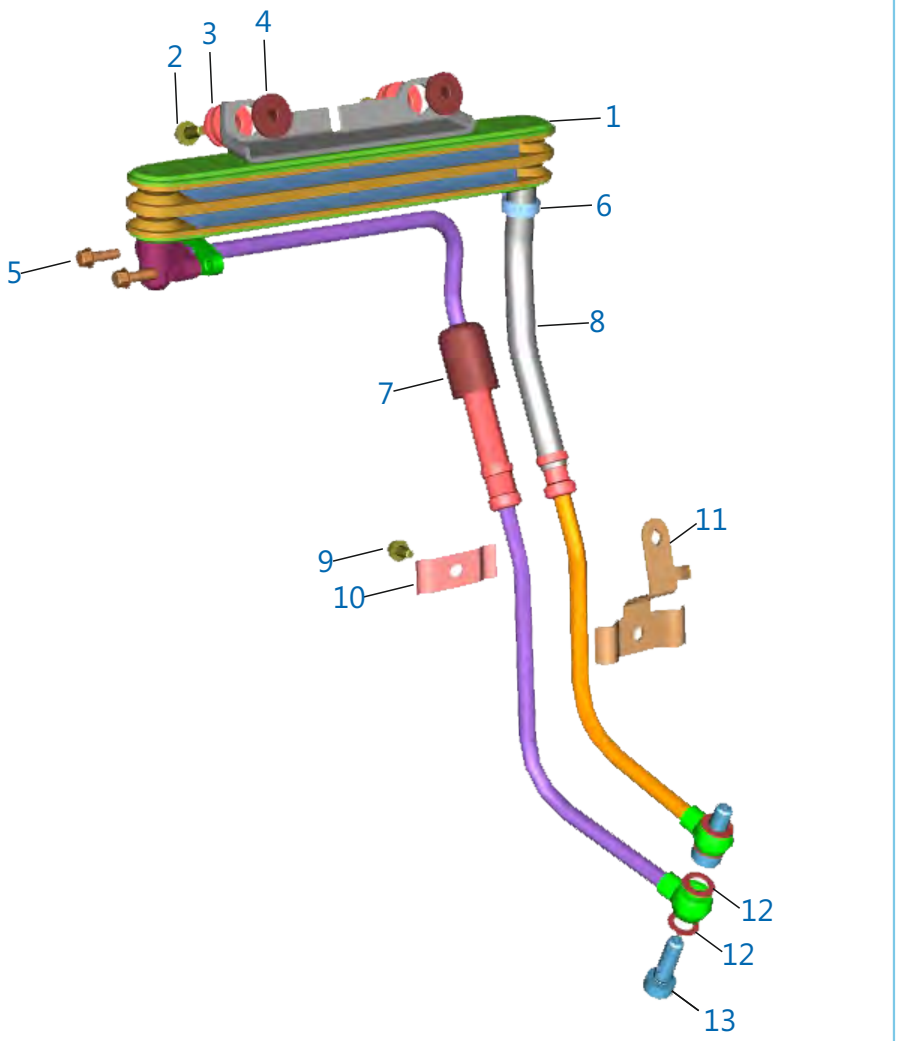

Plate No.: 17

Oil Cooler

No.	Part No.	Description	Single Disc	Twin Disc	Remarks
1	JE 5712 15	Assembly 3 Layer Oil Cooler K11 UG	1	1	
2	KA DF06 14	Bolt-Flange-kad St-f Dia-06 L-14	2	2	
3	JE 5712 23	Grommet Bkt Oil Cooler K11 UG	2	2	
4	JE 5712 27	Sleeve Bkt Oil Cooler K11 UG	2	2	
5	39 1672 04	Bolt - Flange :- M6 X 16	2	2	
6	JE 5712 39	Clamp -Oil Cooler	1	1	
7	JE 5712 19	Assembly Pipe Inlet 3 Layer Oil Cooler	1	1	
8	JE 5712 16	Assembly Pipe Outlet 3 Layer Oil Cooler	1	1	
9	KA DA06 10	Bolt-Flange-kad St-a Dia-06 L-10	1	1	
10	JE 5712 25	Bracket Lower Oil Cooler K11 UG	1	1	
11	JE 5712 24	Bracket Upper Oil cooler K11 UG	1	1	
12	DK 1012 37	Washer Copper Oil Cooler	4	4	
13	DK 1013 66	Bolt Special Banjo	1	1	

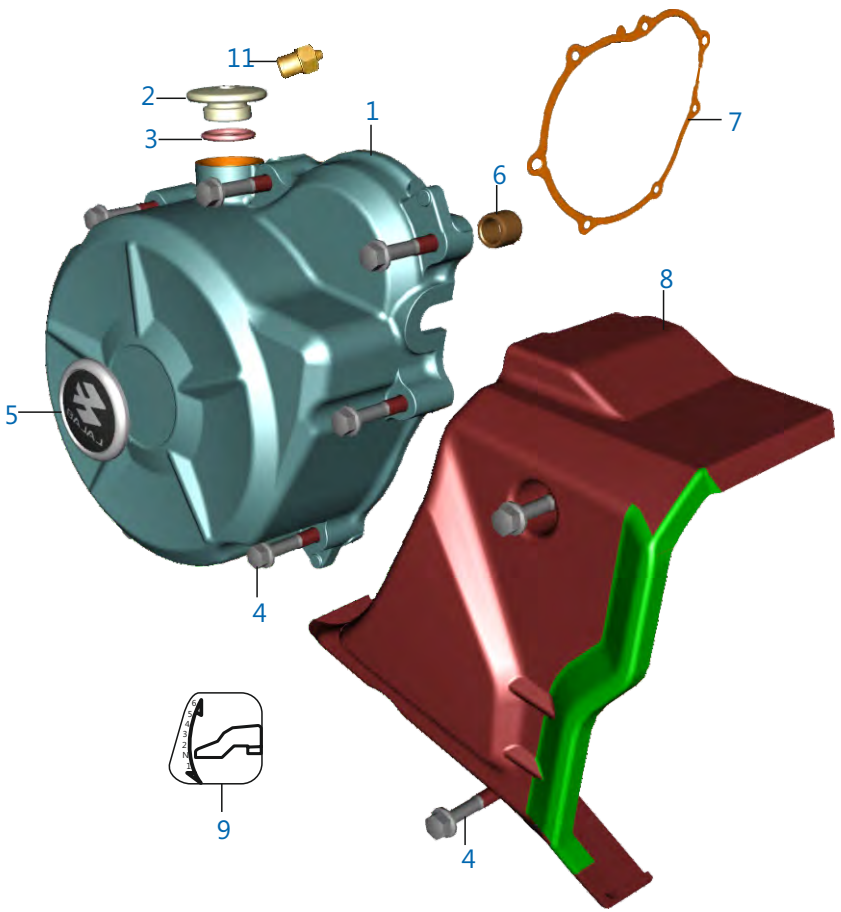

Plate No.: 18

Cover Magneto

No.	Part No.	Description	Single Disc	Twin Disc	Remarks
1	52 JE01 82	Assembly Cover Magneto	1	1	
2	JA 5412 33	Cap TDC Finder	1	1	
3	30 1011 95	Ring - O	1	1	
4	59 0400 38	Bolt - Flanged : Small `	9	9	
5	JL 5412 23	Label Mag Cover	1	1	
6	JA 5410 05	Bush Bendix	1	1	
7	JE 5412 40	Gasket Magneto Cover	1	1	
8	JE 5412 28	Cover RR assly	1	1	With Gear Shift Label
10	DJ 1612 28	Gear Shift Label	1	1	
11	JG 5410 74	Oil Nozzle	1	1	

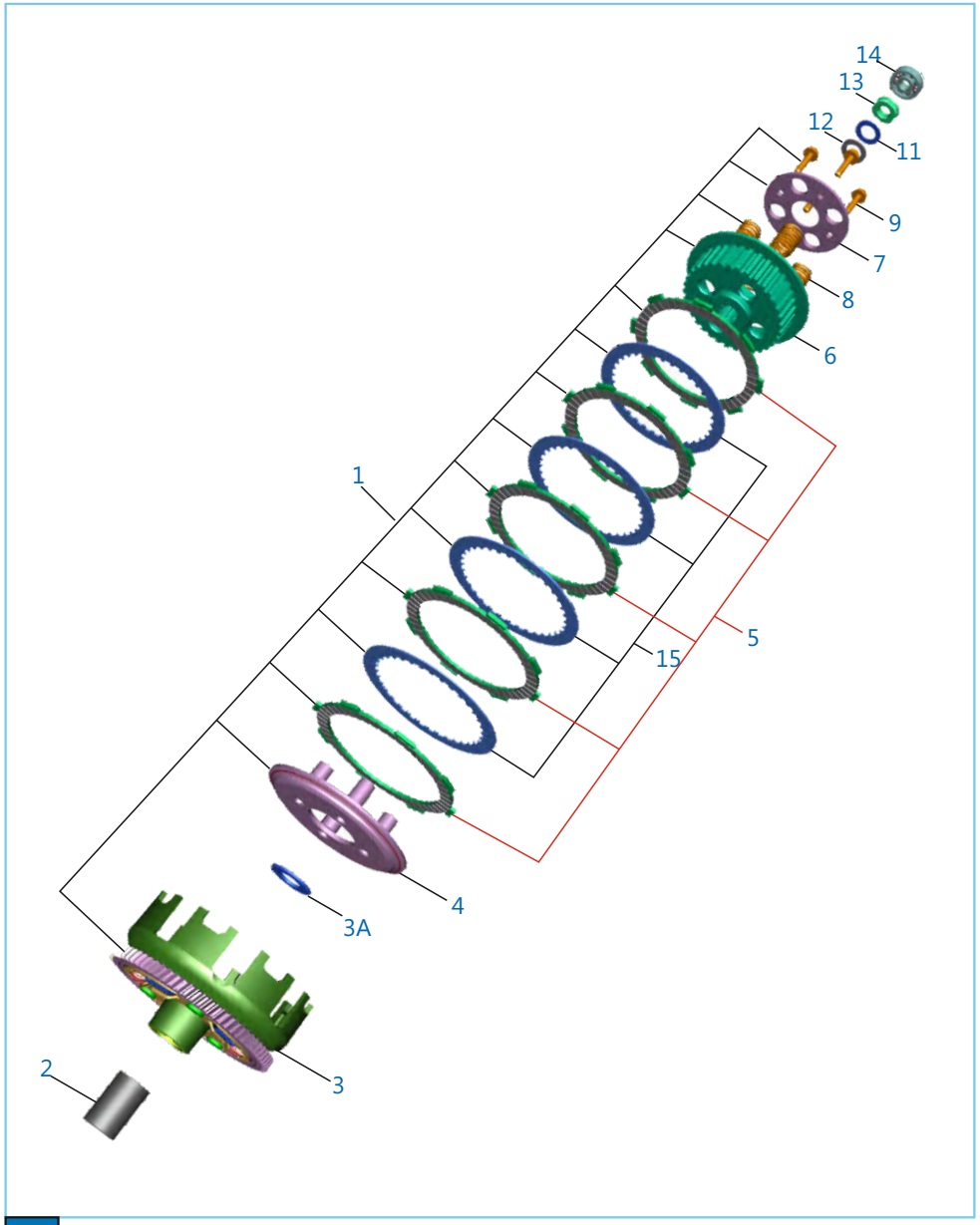

Plate No.: 19

Clutch Assembly

No.	Part No.	Description	Single Disc	Twin Disc	Remarks
1	JE 5514 28	Assembly Clutch	1	1	
2	JA 5514 06	Collar Clutch	1	1	
3	JE 5514 30	Clutch Housing Assly	1	1	
3A	JG 5514 28	Washer - Clutch	1	1	
4	JE 5514 14	Wheel Clutch	1	1	
5	36 JZ01 21	Kit Friction Plate	1	1	
6	JE 5514 13	Clutch Center	1	1	
7	JE 5514 15	Plate Clutch Lifter	1	1	
8	JZ 5514 12	Compression Spring	4	4	
9	39 1553 04	Bolt Upset	4	4	
10	JD 5514 00	Spacer Clutch Assembly	1	1	N.I
11	39 2200 11	Washer Plain	1	1	
12	39 0240 11	Washer Plain	1	1	
13	DH 1016 48	Nut Crankshaft M14	1	1	
14	14 1510 33	Bearing - Ball	1	1	
15	DT 5514 08	Plate Clutch	4	4	

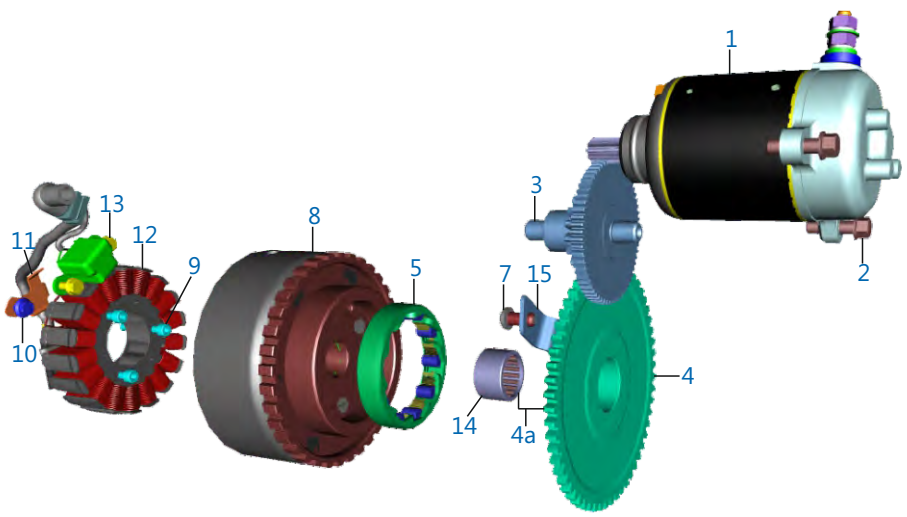

Plate No.: 20

Starter Assembly

No.	Part No.	Description	Single Disc	Twin Disc	Remarks
1	JE 3516 00	Starter Motor Assembly	1	1	
2	39 1673 04	Bolt Flange St Motor Mtg	2	2	
3	JE 6214 07	Starter Drive Assembly K15	1	1	
4	JE 6214 04	Gear Starter Clutch	1	–	
4a	JE 6214 09	Gear Assembly Starter Clutch	–	1	
5	GL 6214 14	One Way Clutch	1	1	
6	36 JZ01 32	Kit Starter Clutch Repair	1	1	N.I.
7	DH 1013 80	Screw Pan Cross	2	2	
8	JE 3510 11	Rotor Assembly	1	–	
	JE 3510 40	Rotor Assembly	–	1	
9	DK 1012 84	Bolt Socket	3	3	
10	LA D000 18	Bolt Flanged M5x0.8x10	1	1	
11	JE 5412 50	Bracket Harness K15 Fi	1	1	
12	JE 3510 13	Stator Assembly	1	–	
	JE 3510 31	Stator Assembly	–	1	
13	LA E000 10	Bolt Flange	2	2	
14	JE 6214 03	Needle Roller Bearing	1	–	
	JE 6214 11	Bearing Needle	–	1	
15	JE 6214 05	Stopper Gear Starter K11	1	1	

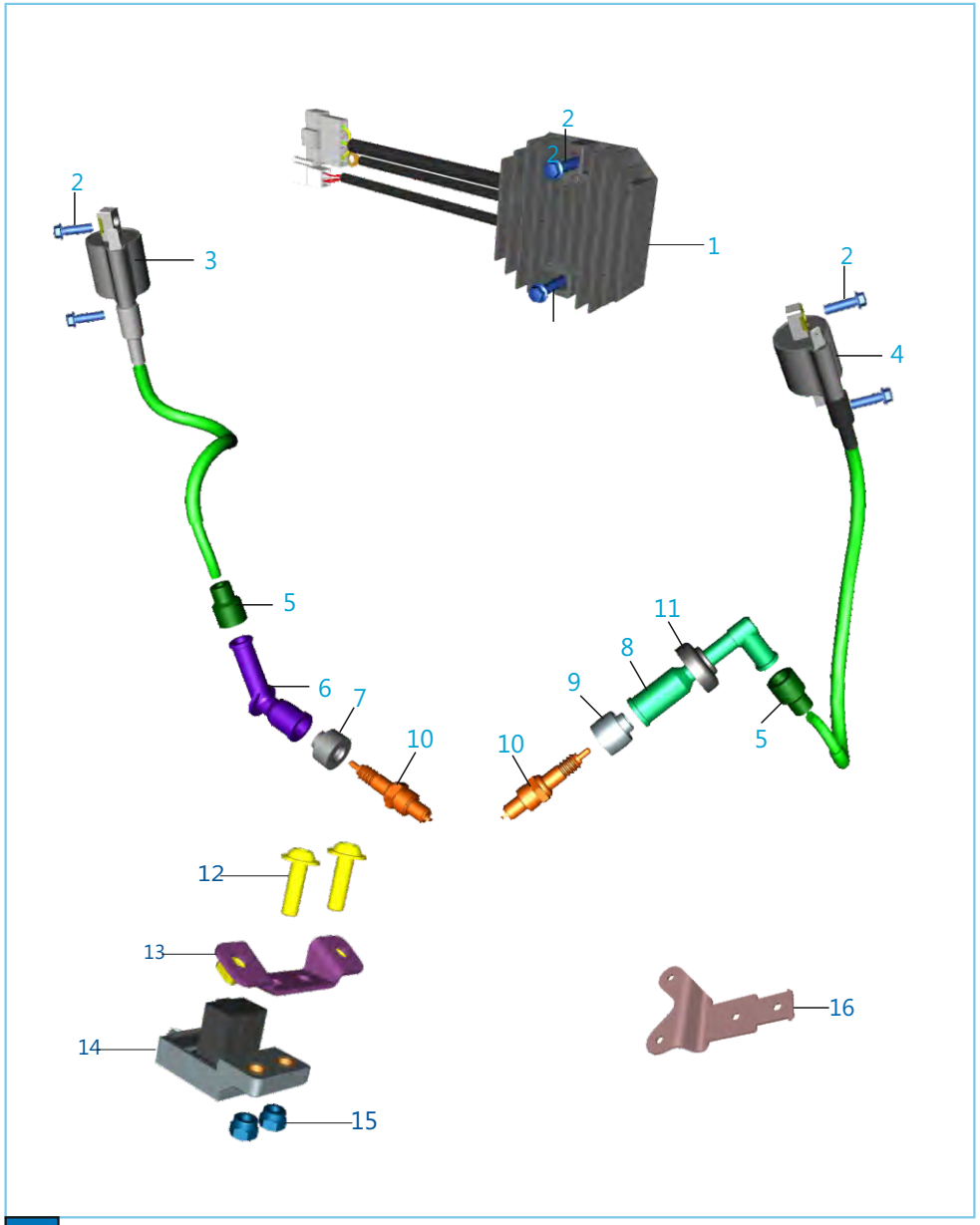

Plate No.: 21

Regulator Assembly & H T Coil

No.	Part No.	Description	Single Disc	Twin Disc	Remarks
1	JL 4020 03	Regulator Assembly	1	1	
2	KA ED06 30	Bolt-Flange-Kae St-d Dia-06 L-30	6	6	
3	JE 3512 50	Coil HT - 1	1	1	
4	JE 3512 52	Coil HT - 2	1	1	
5	DD 1110 12	Grommet HT coil	2	2	
6	JE 3512 12	Spark Plug Cap LH	1	1	
7	DD 1110 11	Grommet Spark Plug Cap LH	1	1	
8	AN 1110 15	Cap Spark Plug RH	1	1	
9	DH 1110 13	Grommet Spark Plug Cap RH	1	1	
10	DD 1110 18	Plug - Spark Champion	2	2	
11	JD 3512 06	Grommet Sleeve Plug Cap RH	1	1	
12	LA C000 08	Screw Button Head-m6x1xl20xblack	2	2	
13	JF 1138 42	Bracket Roll Over Sensor Mtg	1	1	
14	JY 4036 04	Sensor Roll Over My16	1	1	
15	KC HA06 08	Nut Nyloc	1	1	
16	JL 1138 36	Bracket Mtg Loose	1	1	

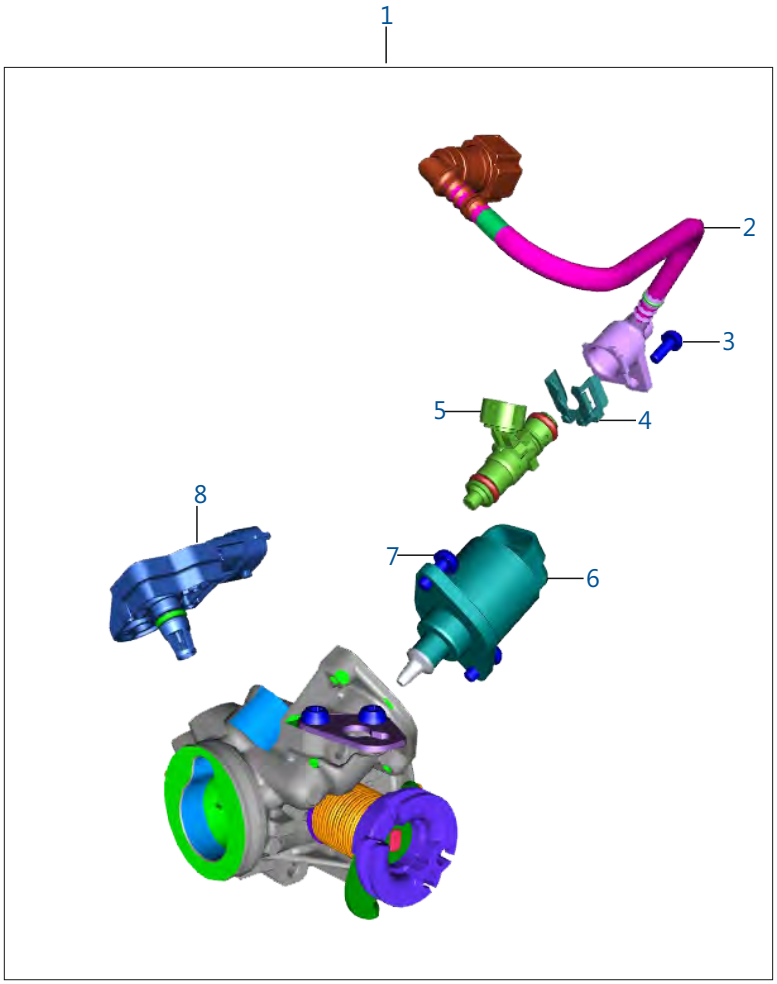

Plate No.: 22

Throttle Body

No.	Part No.	Description	Single Disc	Twin Disc	Remarks
1	JE 6112 03	Body Assembly Throttle	1	1	EURO III
	JE 6112 05	Body Assembly Throttle	1	1	EURO IV
2	JE 6110 01	Assembly Conectr-Tub-Cap Injectr	1	1	
3	JG 5814 24	Fixing Screw	1	1	
4	JG 6110 06	Clip Injector Clip	1	1	
5	JY 6110 03	Fuel Injector	1	1	
6	JG 6112 06	Motor Stepper (Iacv)	1	1	
7	JG 5814 24	Fixing Screw	2	2	
8	JG 3518 05	Sensor Tmap	1	1	

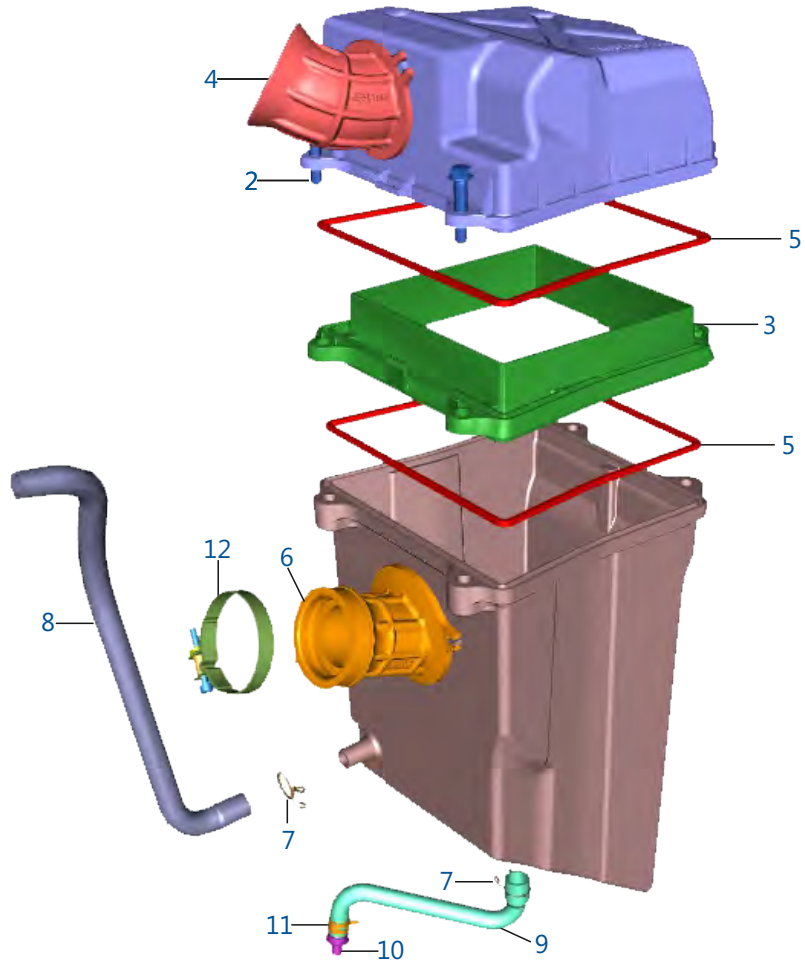

Plate No.: 23

Air Cleaner Complete

No.	Part No.	Description	Single Disc	Twin Disc	Remarks
1	JE 5810 56	Assembly Air Filter	1	1	
2	KA EQ06 30	Bolt Flange	4	4	
3	DT 5810 62	Filter Element	1	1	
4	JE 5810 84	Duct	1	1	
5	DT 5810 28	Seal Top Cover	2	2	
6	JE 5810 18	Tube Connecting K15	1	1	
7	JG 5810 56	Clamp (Breather Tube)	3	3	
8	JE 5810 11	Tube Breather K11	1	–	
	JE 5810 93	Tube Breather	–	1	
9	JL 5810 55	Tube Drain	1	1	
10	DS 1211 26	Plug	1	1	
11	DG 1210 02	Clamp	1	1	
12	JG 5814 42	Clamp	1	1	

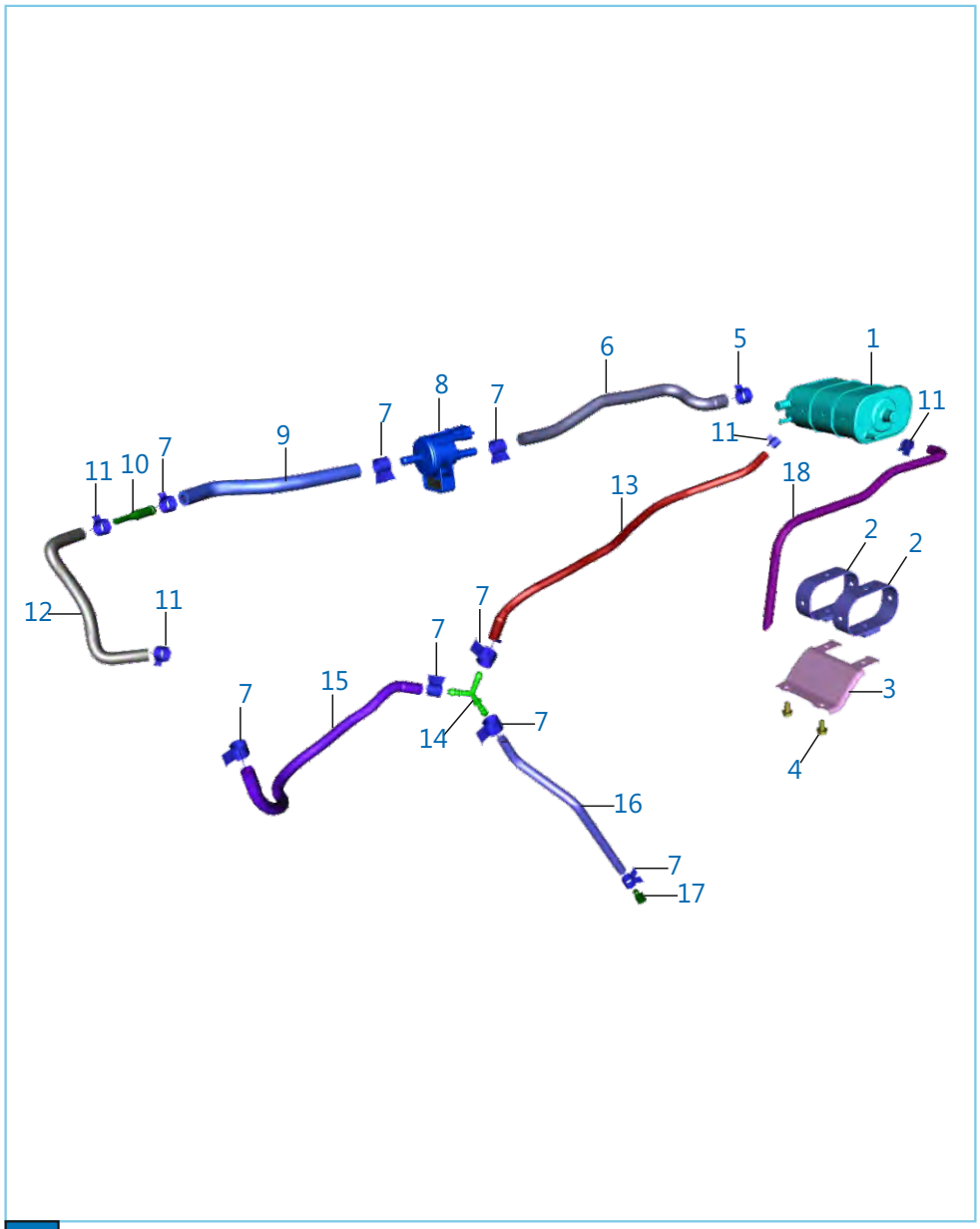

Plate No.: 24

EVAP EURO IV

No.	Part No.	Description	Single Disc	Twin Disc	Remarks
1	JY 1710 77	Canister	1	1	
2	JZ 1710 55	Strap Canister	2	2	
3	JL 1138 30	Bracket Canister Mtg	1	1	
4	KA DA06 12	Bolt Flanged	2	2	
5	JY 1710 69	Spring Band Clamp 15x10	1	1	
6	JL 1718 39	Tube Canister To Purge Valve	1	1	
7	JY 1710 90	Spring Band Clamp 13x12	8	8	
8	JG 1716 01	Valve Purge	1	1	
9	JL 1718 54	Tube Purge Valve To Connector	1	1	
10	JG 1710 86	Connector Tube Evap	1	1	
11	JY 1710 70	Spring Band Clamp 9 X8.4	4	4	
12	DT 1718 47	Tube Conn. To Throttle Body	1	1	
13	JL 1718 37	Tube Y-connector To Canister	1	1	
14	JY 1138 42	Connector Y Shape	1	1	
15	JL 1718 36	Tube Tank To Y Connector-	1	1	
16	JF 1716 07	Tube Connector To Plug	1	1	
17	JY 1718 25	Plug Fuel Drain	1	1	
18	JF 1718 07	Tube Canister Drain	1	1	

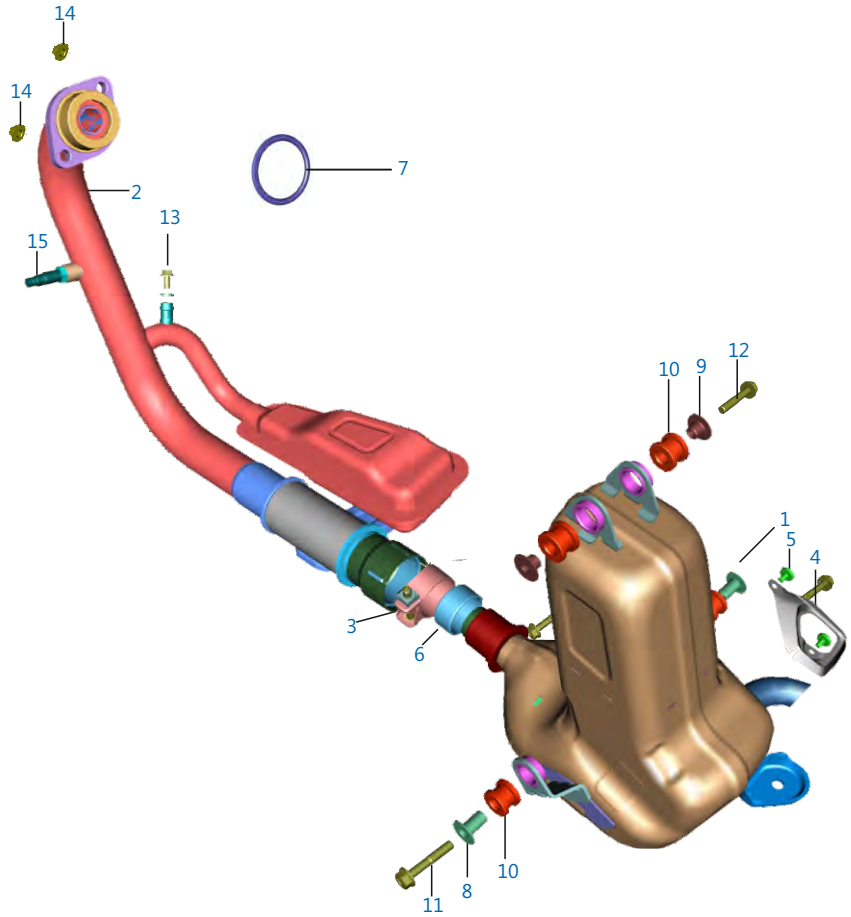

Plate No.: 25

Silencer Assembly

No.	Part No.	Description	Single Disc	Twin Disc	Remarks
1	JE 5910 48	Assembly Muffler	1	1	
2	JE 5910 43	Pipe A Assembly	1	1	
3	JG 5910 38	Band Clip	1	1	
4	JE 5910 46	Heat Shield	1	1	
5	DH 1016 07	Truss Screw	2	2	
6	JG 5910 39	Gasket Muffler Pipe-A	1	1	
7	DJ 1010 64	Gasket Exhaust	1	1	
8	JL 5911 57	Sleeve Bottom	2	2	
9	JL 5911 56	Sleeve Top	4	4	
10	JL 5911 65	Damper Silencer Mounting	4	4	
11	39 2312 04	Bolt - Hexagon Head With Flange :- M8	2	2	
12	KA DD06 30	Bolt Flanged	2	2	
13	KA DA05 10	Bolt Hex	1	1	
14	JA 5910 40	Flange Nut M8x1.25	2	2	
15	JG 5110 10	O2 Sensor	1	1	

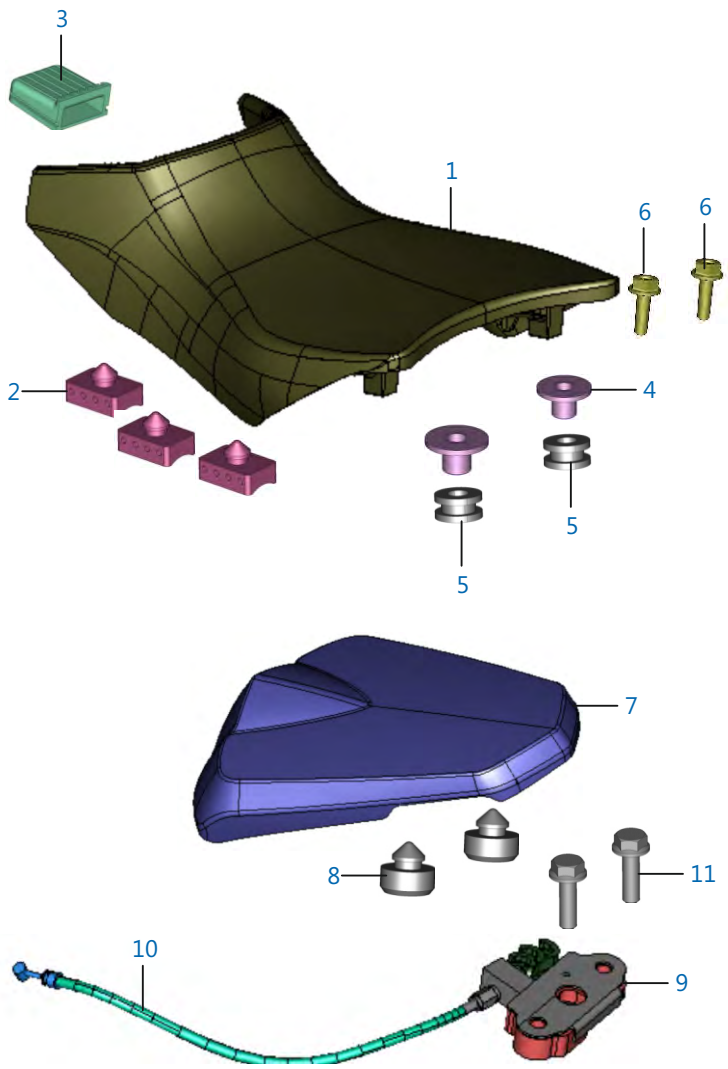

Plate No.: 26

Seat Assembly / Seat Lock

No.	Part No.	Description	Single Disc	Twin Disc	Remarks
1	JL 1910 01	Seat Assy Comp Front	1	1	
2	JL 1910 17	Seat Damper Front	6	6	
3	DK 2110 07	Damper Seat Front	1	1	
4	JG 1910 08	Collar -Seat	2	2	
5	FD 2110 06	Grommet - Seat	2	2	
6	DS 1612 87	Flange Bolt - M6	2	2	
7	JL 1910 04	Seat Assy Comp Rear	1	1	
8	JD 1910 06	Damper Round	2	2	
9	JG 2326 01	Lock Assy Seat Rear	1	1	
10	JG 2326 06	Seat Lock Cable	1	1	
11	KC JD12 12	Nut	2	2	
12	JL 2326 04	Cover Seat Lock	1	1	

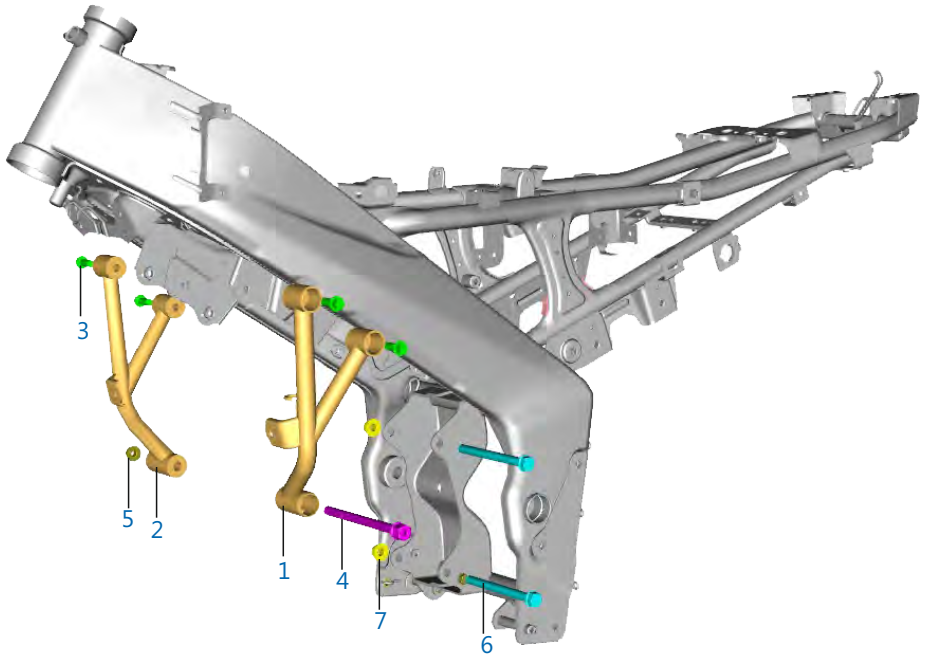

Plate No.: 27

Engine Mountings

No.	Part No.	Description	Single Disc	Twin Disc	Remarks
1	JF 1134 18	Engine Stay LH	1	1	
2	JF 1134 19	Engine Stay RH	1	1	
3	39 1956 04	Bolt - Flanged Small	4	4	
4	JL 1110 54	Eng Mtg Bolt	1	1	
5	KC GD08 08	Nut Hex Flanged	1	1	
6	JF 1134 12	Bolt Eng Mtg Rear	2	2	
7	39 2723 15	Hex Nut	2	2	

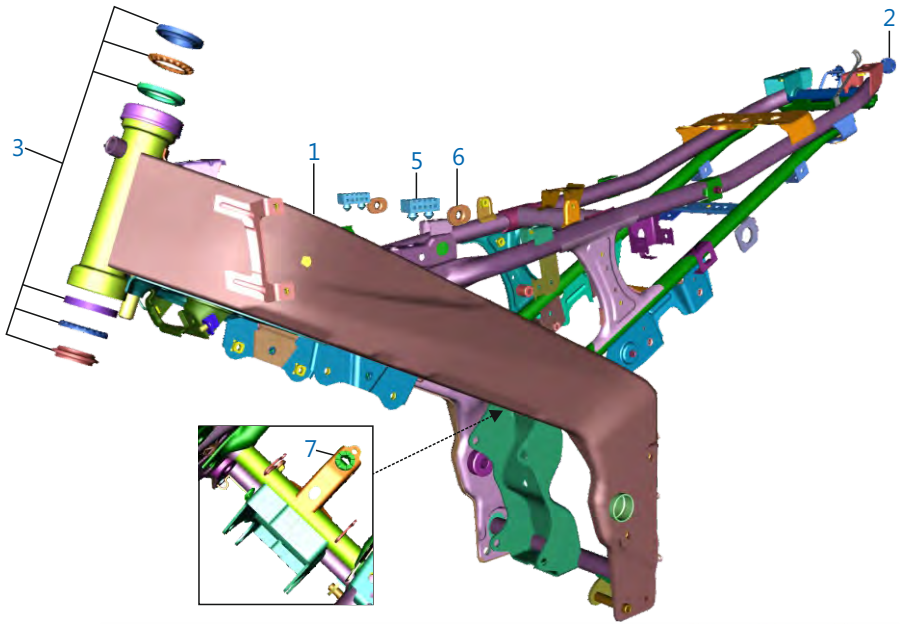

Plate No.: 28

Frame and Frame Fittings

No.	Part No.	Description	Single Disc	Twin Disc	Remarks
1	JF 1111 83	Frame Assly Complete	1	1	
2	JL 1111 03	Cap Tube End	2	2	
3	36 JG00 11	Kit Steering & Bearing	1	1	
4	JB 1812 23	Beading	2	2	N.I
5	DS 2110 04	Damper Seat I	2	2	
6	DS 1410 12	Grommet Side Cover	2	2	
7	JL 1138 09	Grommet Air Filter Resting	1	1	

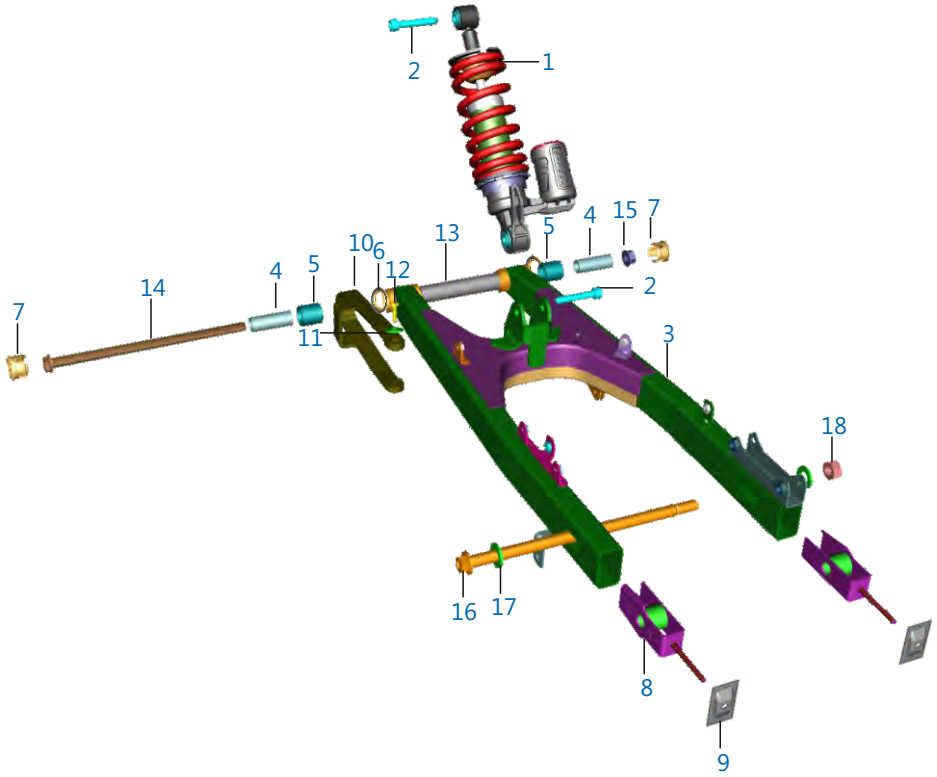

Plate No.: 29

Swing Arm / Rear Shock Absorber

No.	Part No.	Description	Single Disc	Twin Disc	Remarks
1	JL 1220 06	Shock Absorber Mono	1	1	
2	LA C000 19	Bolt Socket M10 X 1.25 X 55	2	2	
3	JF 1220 05	Assembly Swing Arm Comp	1	–	
	JF 1220 72	Arm Assembly Swing	–	1	
4	DG 1710 16	Sleeve	2	2	
5	DG 1710 18	Bearing - Needle	2	2	
6	DG 1710 19	Seal - Oil	4	4	
7	DT 1138 48	Cap Swing Arm Tube	2	2	
8	JZ 1220 08	Adjuster Chain LH & RH	2	2	
9	JZ 1220 12	Plate Adjuster Chain	2	2	
10	JF 1220 06	Slider Chain	1	1	
11	39 0454 11	Washer - Plain	2	2	
12	39 0553 02	Screw - Self Tapping	2	–	
	KB RC35 13	Screw Tapping Pan	–	2	
13	JL 1220 08	Spacer Central Swing Arm	1	1	
14	JL 1220 26	Shaft - Swing Arm	1	1	
15	39 1053 15	Nut	1	1	
16	JF 1312 10	Axel	1	–	
	JF 1310 08	Axle Front	–	1	
17	LD B000 29	Washer Rear Axel	2	2	
18	LC J000 02	Nut	1	1	

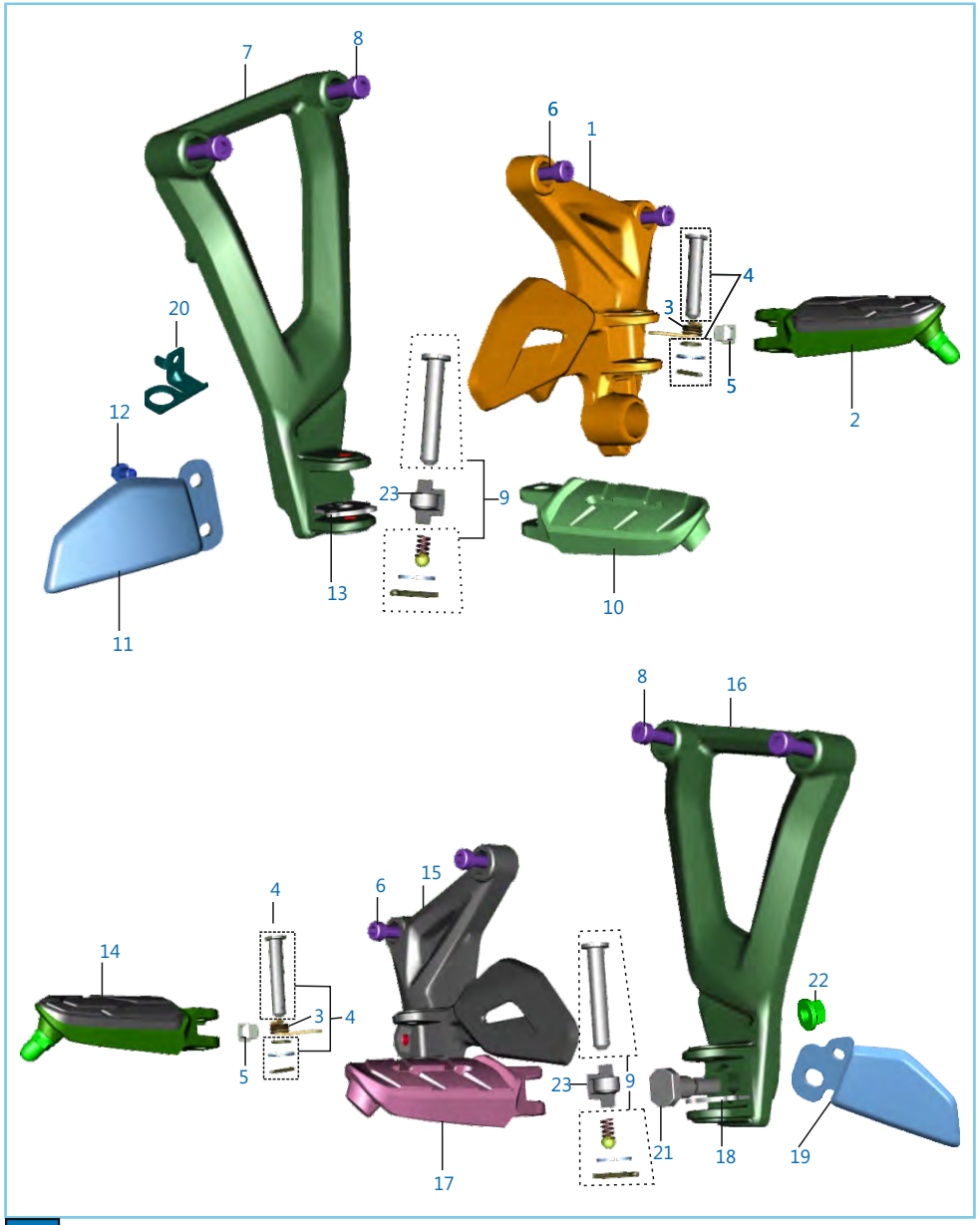

Plate No.: 30

Pillion Foot Rest / Holder

No.	Part No.	Description	Single Disc	Twin Disc	Remarks
1	56 JL3Y 1Y	Holder Step RH Slate Grey	1	1	
2	52 JL10 35	Step Assly Main RH Slate Grey	1	1	
3	JL 1130 12	Spring Torsion	1	1	
4	36 JL00 41	Kit Main Step Hardware	2	2	
5	JF 1130 07	Damper Footrest	2	2	
6	KA CA08 20	Bolt-Socket Dia-08 L-20	4	4	
7	56 JL4K 1Y	Step Holder Pillion RH Slate Grey	1	1	
8	39 2722 04	Bolt - Socket Head :- M8 (olive Green)	4	4	
9	36 JL00 15	Kit Pillion Hardware	2	2	
10	56 JF19 1Y	Step Pillion RH Slate Grey	1	1	
11	56 JL4M 1Y	Flap Holder RH Slate Grey	1	1	
12	KA DF06 10	Bolt Flanged	4	4	
13	DT 1130 15	Lock Plate RH	1	1	
14	52 JL10 24	Step Assly Main LH Slate Grey	1	1	
15	56 JL3X 1Y	Holder Step LH Slate Grey	1	1	
16	56 JL4J 1Y	Step Holder Pillion Slate Grey	1	1	
17	56 JF18 1Y	Step Pillion LH K10 Slate Grey	1	1	
18	DT 1130 14	Lock Plate LH	1	1	
19	56 JL4L 1Y	Flap Pillion Holder LH	1	1	
20	JL 1130 33	Bracket Rear Brake Switch	1	1	
21	JL 1130 38	Step Bolt	1	1	
22	39 1225 15	Nut Hex. with Flange- M10	1	1	
23	JZ 1130 61	Rubber Pad Step	2	2	

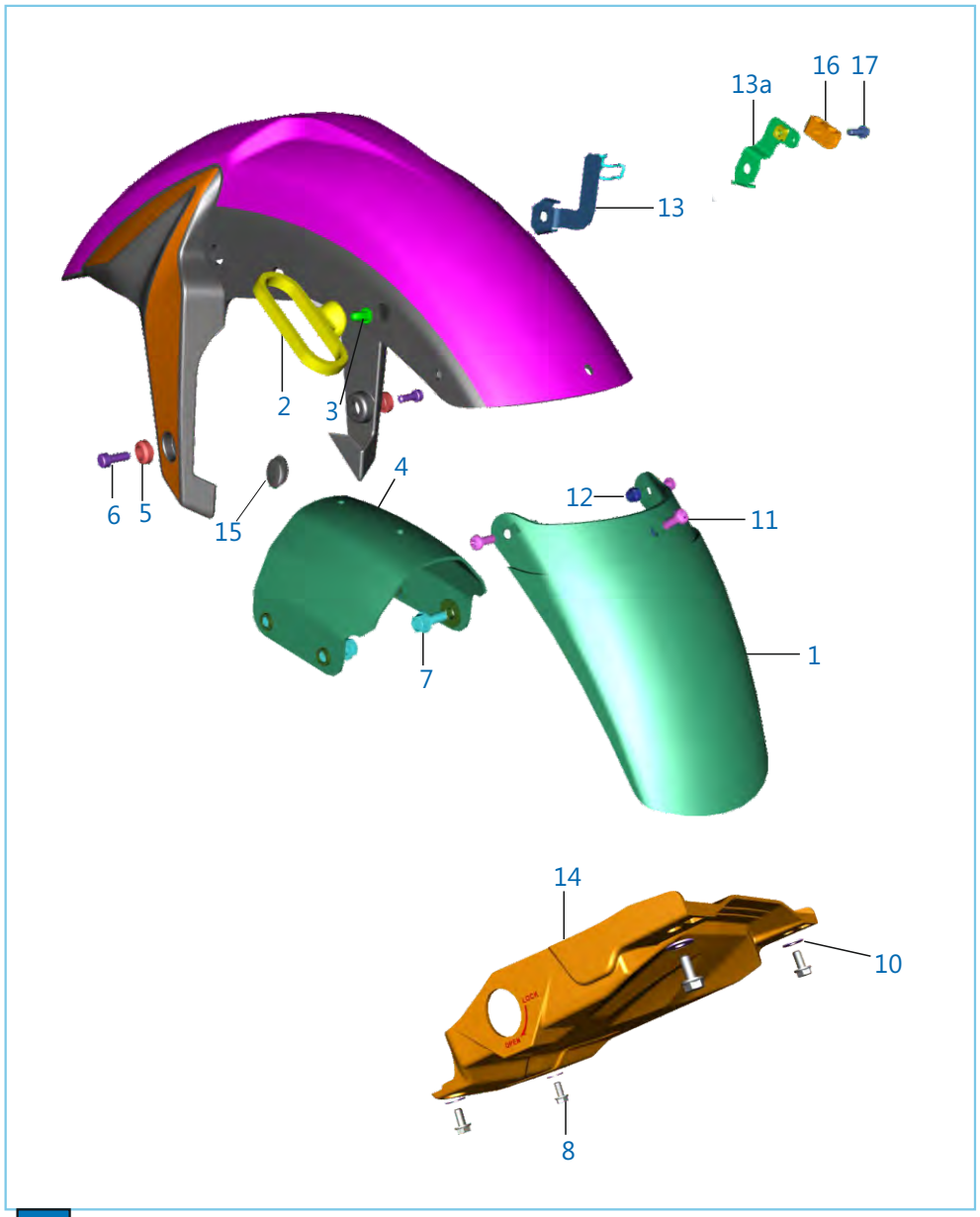

Plate No.: 31

Mudguard - Front & Rear

No.	Part No.	Description	Single Disc	Twin Disc	Remarks
1	JF 1814 03	Mudflap - Front	1	1	
2	DS 1611 25	Guide - Cable	1	1	EURO III
3	DJ 1610 69	Nail - Cable Guide	1	1	EURO III
4	JF 1814 02	Bracket Brace Fender	1	1	
5	JL 1814 11	Washer Front-Fender-Mtg	2	2	
6	KA CA06 16	Bolt - Hexagon Socket Head :- M6	2	2	
7	KA DF08 20	Bolt - Flanged M8	4	4	
8	39 1943 04	Bolt - Flanged	4	4	
9	KD AA05 10	Washer - Plain	6	6	N.I.
10	LD B000 23	Washer Plain	4	4	
11	39 2420 01	Screw - Pan Head :- M5	3	3	
12	39 0326 15	Nut - Nyloc M5 X 0.8	3	3	
13	JF 1318 55	Bracket -Hose Clamp	1	1	EURO III
13a	JF 1318 52	Bracket ABS Brake Clamp	1	1	EURO IV
14	JL 1812 09	Fender Rear Front	1	1	
15	DT 1814 33	Plug Front Fender Rear	1	1	EURO IV
16	DT 1318 75	Clamp Brake Hose - K8	1	1	EURO IV
17	KA ED06 18	Bolt Flange-kae St-d Dia-06 L-18	1	1	EURO IV

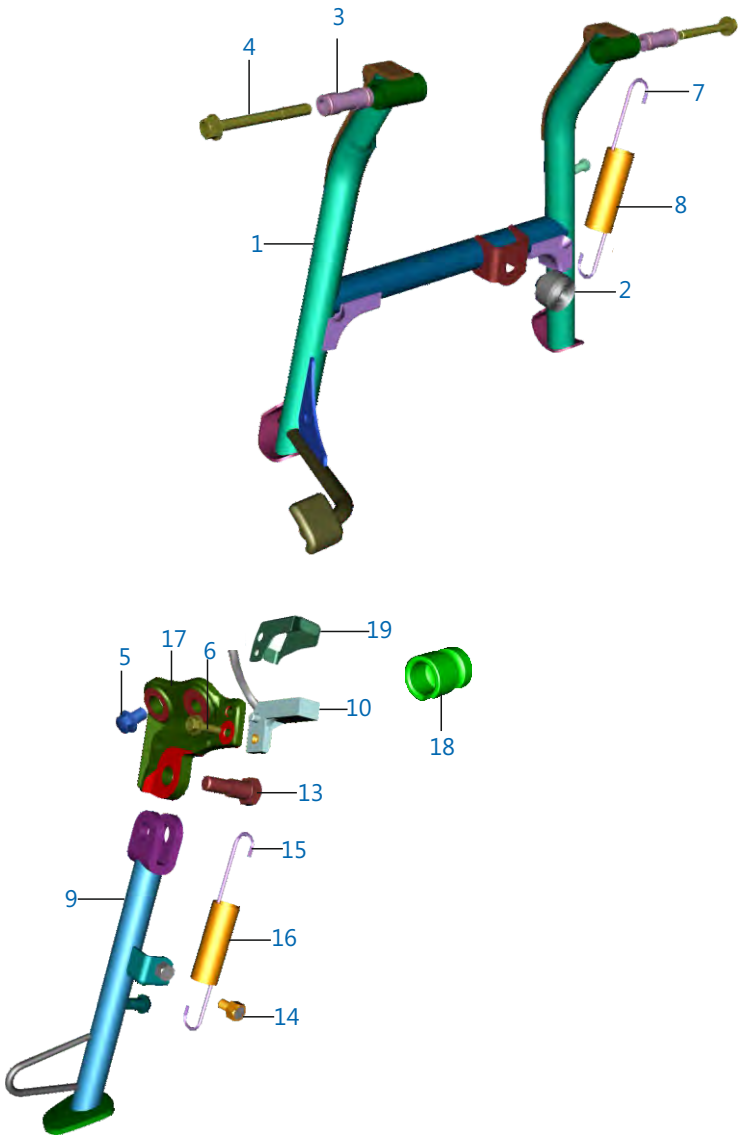

Plate No.: 32

Stand Assembly

No.	Part No.	Description	Single Disc	Twin Disc	Remarks
1	JF 1132 02	Center Stand	1	1	
2	DG 1611 24	Damper	1	1	
3	JL 1132 10	Bush Main Stand LH	2	2	
4	LA D001 34	Bolt - Flanged M8	1	1	
5	39 1689 04	Bolt - Hexagon M8 X 1.25	1	1	
6	LA D001 35	Bolt Flanged	1	1	
7	JL 1132 07	Spring Main Stand	1	1	
8	JL 1132 12	Cover Spring Main Stand	1	1	
9	JL 113201	Assly Side Stand	1	1	
10	JF 4014 05	Side Stand Switch - K10	1	1	
11	39 0422 15	Nut - Nyloc	1	1	
12	DF 1611 02	Bolt for Side Stand Mtg	1	1	
13	KA DB05 16	Bolt Flanged	1	1	
14	JL 4036 00	Magnet Assly	1	1	
15	JL 1132 09	Spring Side Stand	1	1	
16	DH 1611 46	Cover Spring Side Stand	1	1	
17	52 JL00 72	Bracket Side Stand Mtg	1	1	
18	JL 1132 23	Bush Anchor Pin	1	1	
19	JL 1138 18	Cover Side Stand Switch	1	1	

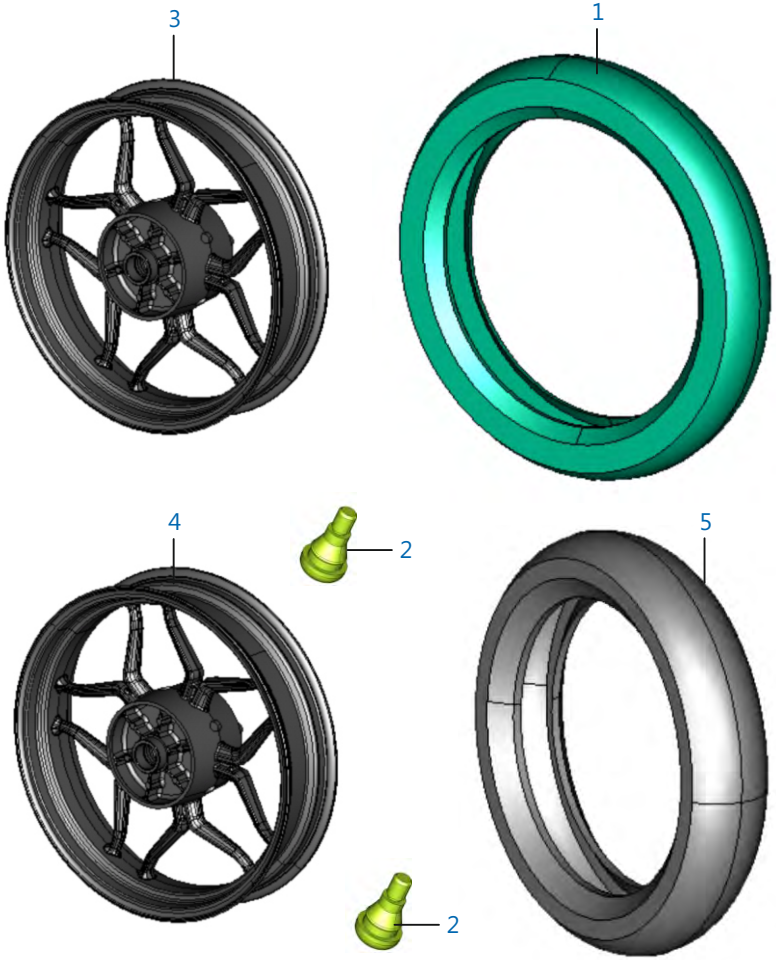

Plate No.: 33

Tube / Tyre / Rim

No.	Part No.	Description	Single Disc	Twin Disc	Remarks
1	JF 1310 10	Tyre Front Tubeless	1	–	
	DK 1510 39	Tyre 90/90-17 Tubeless Hi-grip	–	1	
2	DK 1510 26	Valve Tubeless Tyre	2	2	
3	JF 1310 11	Wheel Rim 1.85X17	1	1	
4	JF 1312 06	Wheel Rim 2.15X17	1	–	
	JF 1312 33	Wheel Rear Mt 2.50x17	–	1	
5	JF 1312 22	Tyre Rear 110/80-17	1	–	
	DK 1510 40	Tyre 120/80-17 Tubeless Hi Grip	–	1	

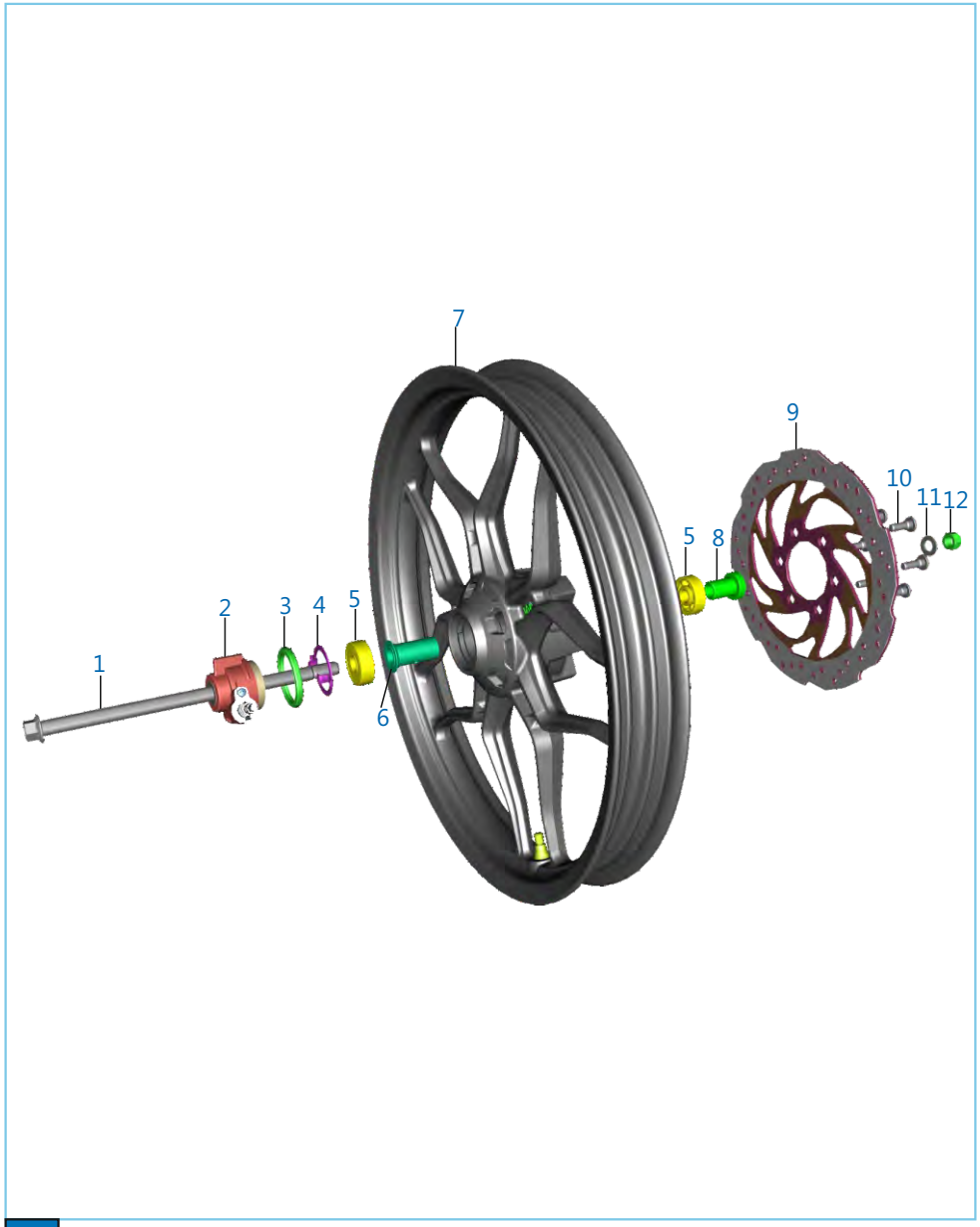

Plate No.: 34

Front Hub Non ABS EURO III

No.	Part No.	Description	Single Disc	Twin Disc	Remarks
1	JF 1310 08	Axel Front	1	1	
2	DH 2010 79	Sensor Speed Assly	1	1	
3	30 1510 33	Oil Seal	1	1	
4	DE 1510 12	Plate Drive	1	1	
5	KP BB63 01	Bearing Ball C3 Clearance	2	2	
6	JF 1310 18	Assembly Collar Fr Wheel	1	1	
7	JF 1310 11	Wheel front	1	1	
8	JF 1310 16	Spacer	1	1	
9	JF 1318 00	Disc Front	1	1	
10	JD 1318 11	Special Bolt	6	6	
11	39 0781 11	Washer - Plain	1	1	
12	59 1500 03	Nut	1	1	

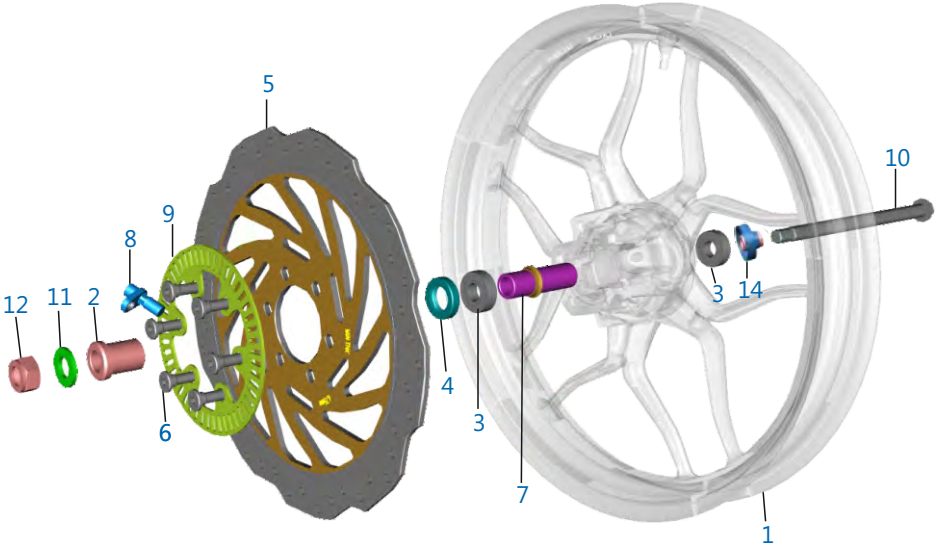

Plate No.: 35

Front Hub ABS EURO IV

No.	Part No.	Description	Single Disc	Twin Disc	Remarks
1	JF 1310 11	Wheel Front 1.85x17 Tl	1	1	
2	JF 1310 16	Spacer FR Wheel	1	1	
3	KP BB63 01	Bearing-Ball-C3 Clearance	2	2	
4	30 1510 33	Seal - Oil	1	1	
5	JF 1318 33	Disc Front Dia 260	1	1	
6	JD 1318 11	Special Bolt M8	6	6	
7	JF 1310 18	Assembly Collar Fr Wheel	1	1	
8	DT 4024 04	Wheel Speed Sensor (ABS)	1	1	
9	JU 1318 01	Sensor Disc Front	1	1	
10	JF 1310 08	Axle Front	1	1	
11	LD B000 29	Washer Rear Axle RH	1	1	
12	LC J000 02	Nut U	1	1	
13	39 1943 04	Bolt - Flanged (Speed Sensor Mtg)	1	1	N.I.
14	JF 1310 22	Assembly Collar-FR Wheel	1	1	

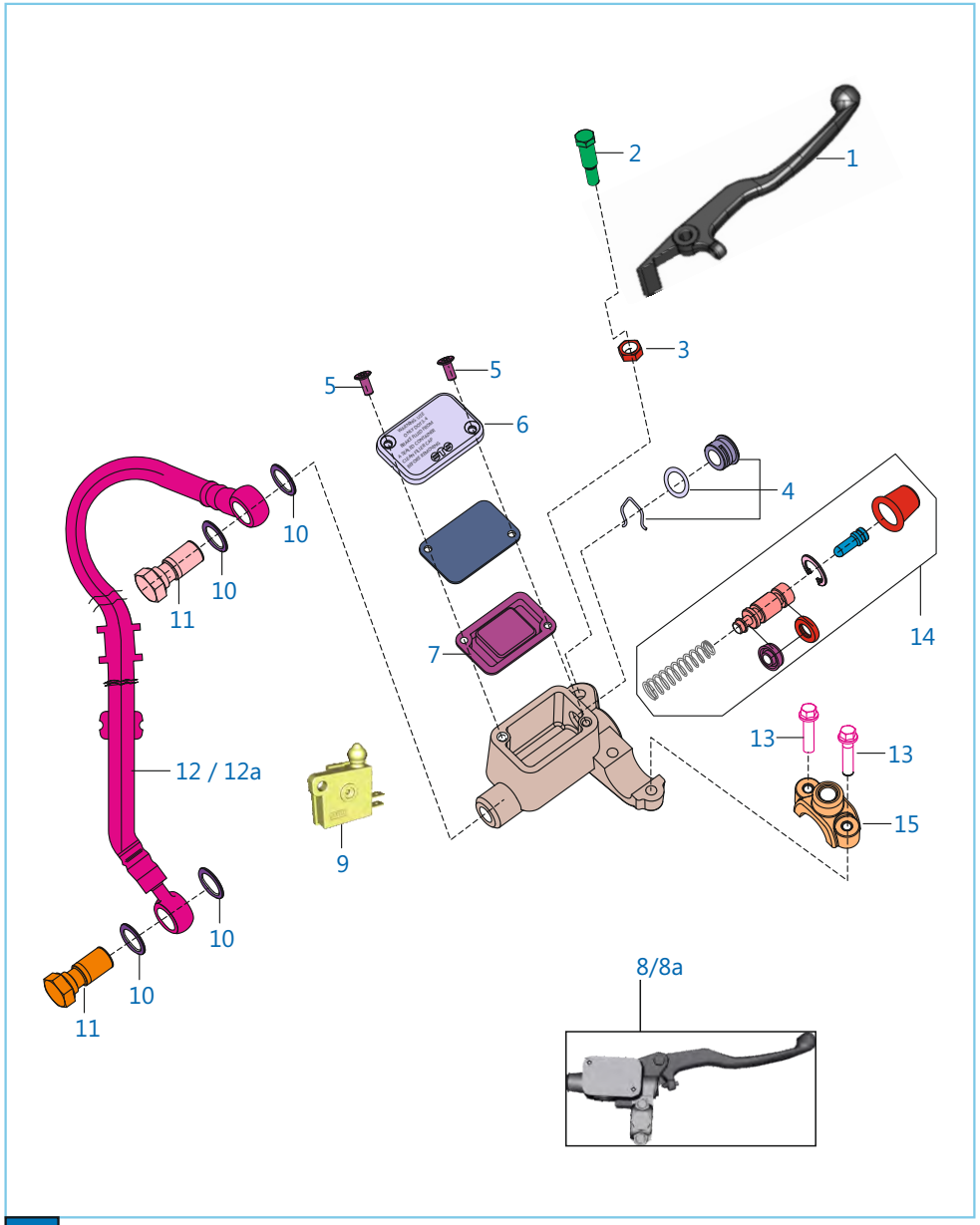

Plate No.: 36

Front Master Cylinder

No.	Part No.	Description	Single Disc	Twin Disc	Remarks
1	JG 1610 10	Lever Front Brake	1	1	
2	DJ 1910 29	Bolt Front Bracket I	1	1	
3	DJ 1910 30	Nut	1	1	
4	DH 1910 62	Oil Window Kit	1	1	
5	DJ 1910 31	Screw	2	2	
6	DE 1910 29	Cover Reservoir	1	1	
7	DE 1910 28	Diaphragm	1	1	
8	JF 1318 07	Master Cylinder with Lever	1	1	EURO III
8a	JF 1318 16	Master Cylinder with Lever	1	1	EURO IV
9	DJ 2011 09	Brake Switch	1	1	
10	DE 1910 10	Washer-Copper	4	4	
11	DK 1510 69	Bolt- Benjo	2	2	
12	JF 1318 02	Hose Assly	1	1	EURO III
12a	36 JL01 41	Hose Master Cyl to ABS Unit	1	1	EURO IV
13	LA D000 37	Bolt Flanged	2	2	
14	36 JF00 44	Kit M Cylinder Major	1	1	EURO III
	36 DT00 34	Kit M Cylinder Major	1	1	EURO IV
14a	36 JF00 45	Kit M Cylinder Minor	1	1	N.I
15	DE 1910 33	Clamp Holder RH	1	1	
	36 JF00 81	Kit Clamp Kit Mast Cyl	1	1	EURO IV
16	36 JF00 82	Pushrod Assembly Kit	1	1	N.I. EURO IV



Plate No.: 37

Rear Master Cylinder

No.	Part No.	Description	Single Disc	Twin Disc	Remarks
1	36 DH41 73	Minor Kit - Master Cylinder	–	1	
2	36 DH41 72	Major Kit - Master Cylinder	–	1	
3	YJ F220 06	Master Cylinder	–	1	
4	YJ F220 04	Hose Reservoir With Clamps	–	1	
5	YJ F220 02	Reservoir With Cap & Diaphragm	–	1	
6	YJ F220 01	Cap Reservoir & Diaphragm	–	1	
7	LA D000 77	Bolt flanged M6 X 16	–	2	
8	KA DT06 12	Bolt Flanged	–	1	
9	JL 1318 41	Bracket- Reservoir mounting	–	1	
10	JL 1318 78	Bracket Reservoir cap	–	1	
11	KA DD06 14	Flanged Bolt	–	1	N.I

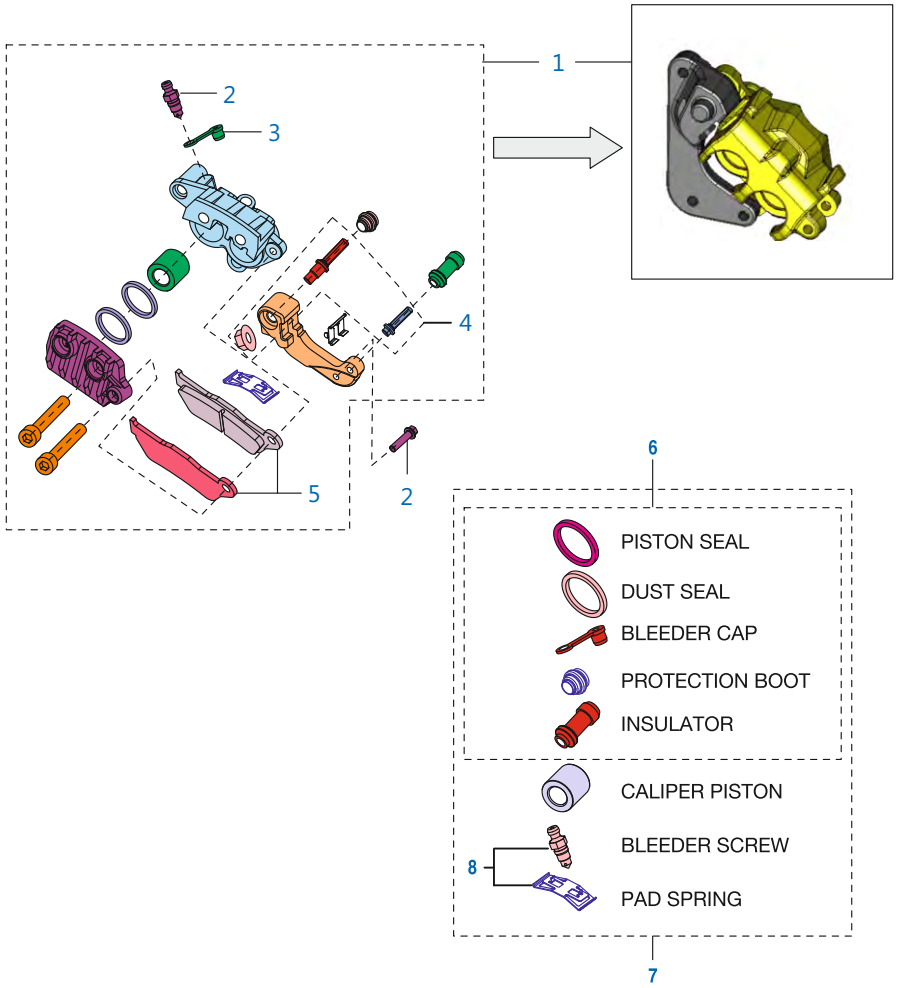

Plate No.: 38

Front Caliper

No.	Part No.	Description	Single Disc	Twin Disc	Remarks
1	JF 1318 06	Caliper Assy Brake Front	1	1	EURO III
	JF 1318 34	Caliper Assy Brake Front	1	1	EURO IV
2	DJ 1510 69	Screw Bleeder	1	1	
3	DJ 1510 70	Bleeder Cap	1	1	
4	JW 1318 10	Anchor Pin Kit	1	1	
5	JW 1318 07	Disc Pad	1	1	
6	36 JF00 16	Minor With Grease	1	1	
7	36 JF00 15	Major With Grease	1	1	
8	36 JF00 17	Mini With Grease	1	1	



Plate No.: 39

Rear Caliper

No.	Part No.	Description	Single Disc	Twin Disc	Remarks
1	YJ F220 09	Caliper Assembly	–	1	
2	36 DH41 74	Disc Pad Set Rear Caliper	–	1	
3	36 DH41 75	Major Kit Rear Caliper	–	1	
4	36 DH41 77	Kit Minor Rear Caliper	–	1	
5	36 DH41 76	Kit Piston Seal Rear Caliper	–	1	
6	36 DH41 78	Kit Bleeder Screw End	–	1	
7	36 DH41 79	Kit Caliper Hardwares End	–	1	
8	36 DH41 80	Kit Holder Bracket Caliper End	–	1	
9	JF 1318 78	Hose Pipe	–	1	
10	JL 1138 28	Clamp SAI Hose mtg	–	1	

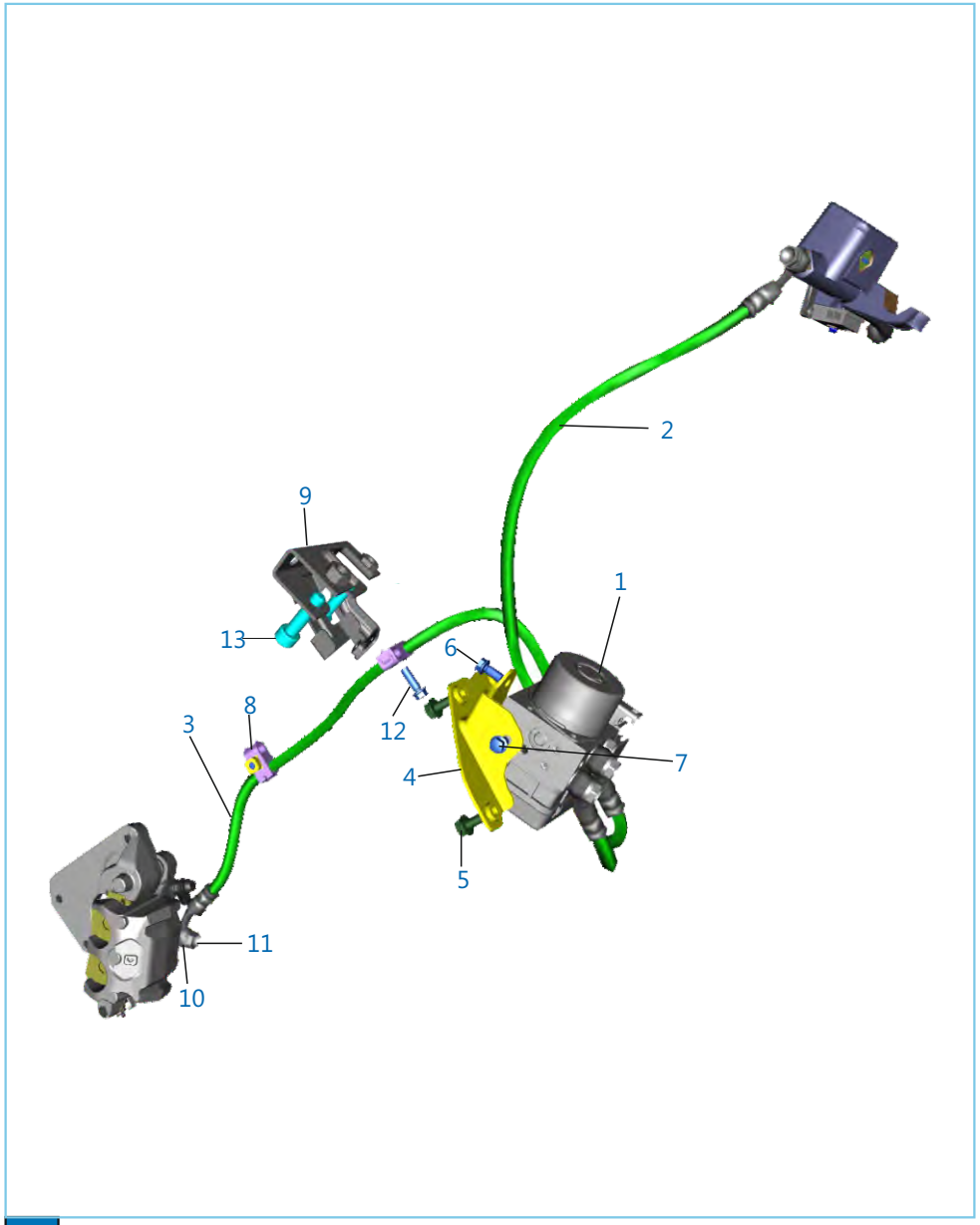

Anti Brake Lock System - Single Disc

No.	Part No.	Description	Single Disc	Twin Disc	Remarks
1	JF 1318 39	Unit ABS Wet -k16b	1	–	
2	36 JL01 41	Brake Hose Assembly Kit Front	1	–	
3	36 JF02 00	Kit Hose Unit ABS-Caliper Front	1	–	
4	DT 1138 50	Bracket ABS Mtg	1	–	
5	KA DA06 14	Bolt-flange-kad St-a Dia-06 L-14	3	–	
6	KA ED06 12	Bolt Flanged	1	–	
7	KA ED06 08	Bolt Flanged	1	–	
8	DT 1318 75	Clamp Brake Hose	3	–	
9	JL 1138 39	BKT ABS Brake Hose Clamp	1	–	
10	DE 1910 10	Copper Washer	1	–	
11	DK 1510 69	Benjo Bolt	4	–	
12	KA EA06 22	Bolt Flanged	2	–	
13	KA CA08 30	Bolt Socket	2	–	

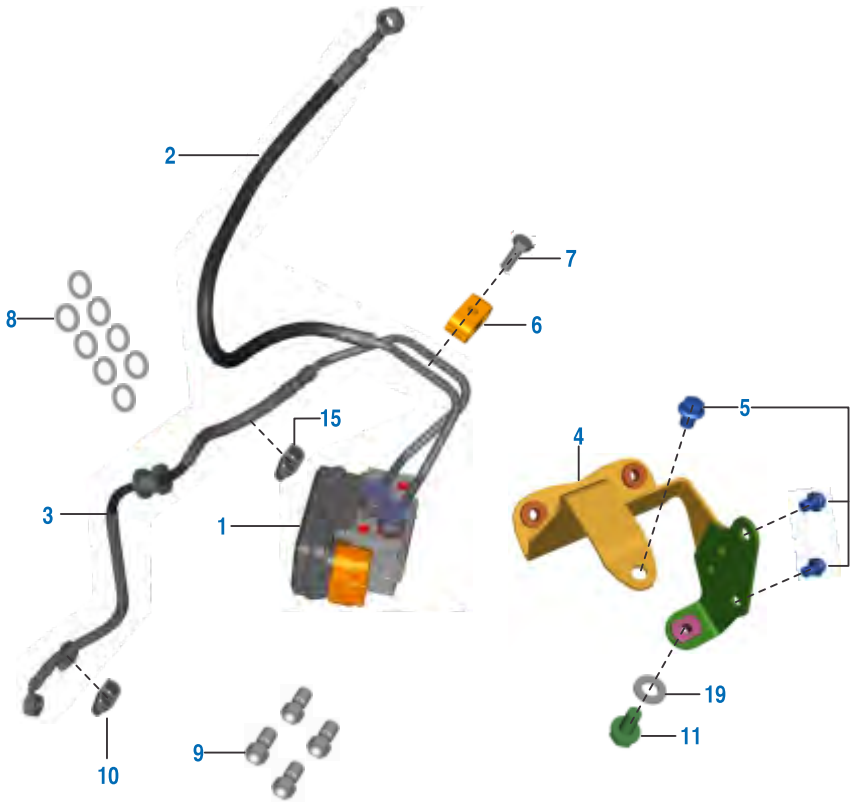

Anti Brake Lock System - Twin Disc

No.	Part No.	Description	Single Disc	Twin Disc	Remarks
1	JF 1319 02	ABS Unit	–	1	
2	36 JF01 99	Hose M Cylinder to ABS Unit	–	1	
3	36 JF02 00	Hose Caliper to ABS	–	1	
4	JF 1138 54	Bracket ABS	–	1	
5	KA ED06 08	Bolt flanged small	–	3	
6	DT 1318 75	Clamp brake hose	–	1	
7	KA AA06 20	Bolt	–	1	
8	DJ 1910 26	Copper Washer	–	8	
9	GL 1318 27	Benjo Bolt	–	4	
10	JF 1318 71	Clip separator	–	2	
11	LA E000 21	Bolt flanged M6 x 12	–	1	
12	JB 1130 07	Plain washer	–	1	

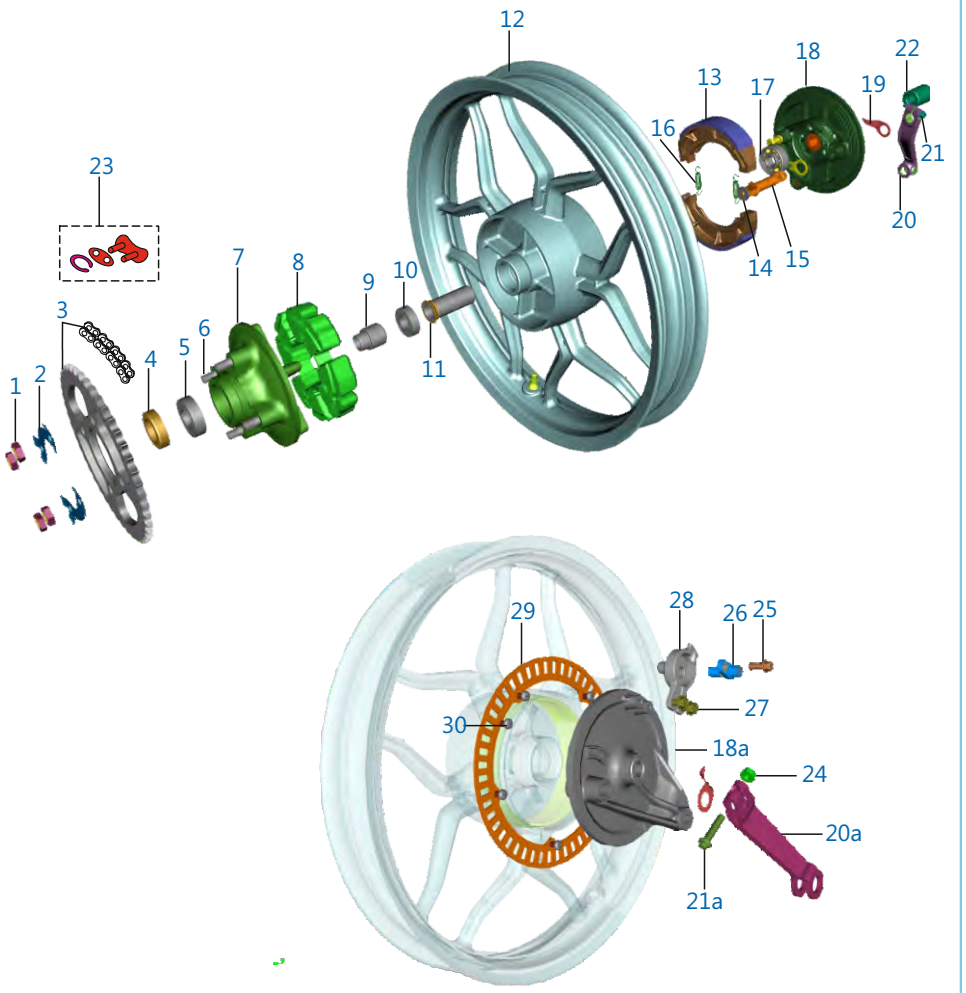

Plate No.: 42

Rear Hub - Single Disc

No.	Part No.	Description	Single Disc	Twin Disc	Remarks
1	LC B000 05	Nut Hex	4	–	
2	PF 1312 20	Washer Lock	2	–	
3	36 JF00 06	Kit Sprocket Chain	1	–	
4	DS 1510 57	Dust Cover	1	–	
5	KP BC60 04	Bearing Ball	1	–	
6	DS 1510 73	Stud	4	–	
7	JN 1312 03	Coupling	1	–	
8	JG 1312 19	Coupling Rubber	1	–	
9	JD 1312 12	Sleeve	1	–	
10	KP BB62 02	Bearing Ball	1	–	
11	JD 1312 10	Collar	1	–	
12	JF 1312 06	Wheel Rear	1	–	
13	JN 1318 12	Brake Shoe Kit(non Asbestos)	1	–	
14	39 0722 11	Plain Washer	1	–	
15	JC 1510 04	Cam Brake	1	–	
16	30 1510 69	Spring	2	–	
17	KP BB63 02	Bearing Ball	1	–	
18	DJ 1511 19	Panel Rear Brake(JF131608)	1	–	EURO III
18a	JH 1318 64	Panel Rear Brake-ABS	1	–	EURO IV
19	JC 1510 06	Indicator	1	–	
20	JF 1316 00	Cam Lever	1	–	EURO III
20a	JF 1318 43	Cam Lever Rear Brake-(K16B-UG)	1	–	EURO IV
21	JB 1312 24	Hex Bolt	1	–	EURO III
21a	KA EF06 30	Bolt-Flange-KAE ST-F Dia-06 L-30	1	–	EURO IV
22	JF 1312 09	Spacer Panel	1	–	
23	JD 1410 03	Lock Set	1	–	
24	DS 1510 94	Flanged Nut	1	–	EURO IV
25	39 1672 04	Flange Bolt-m6 X 16	1	–	EURO IV
26	DT 4024 04	Wheel Speed Sensor (abs)	1	–	EURO IV
27	KA DE06 14	Bolt Flanged	2	–	EURO IV
28	DT 1318 57	Speed Sensor Mounting Enclosure	1	–	EURO IV
29	DT 1318 54	Sensor Disc Rear	1	–	EURO IV
30	JG 1312 20	Screw For ABS	6	–	EURO IV

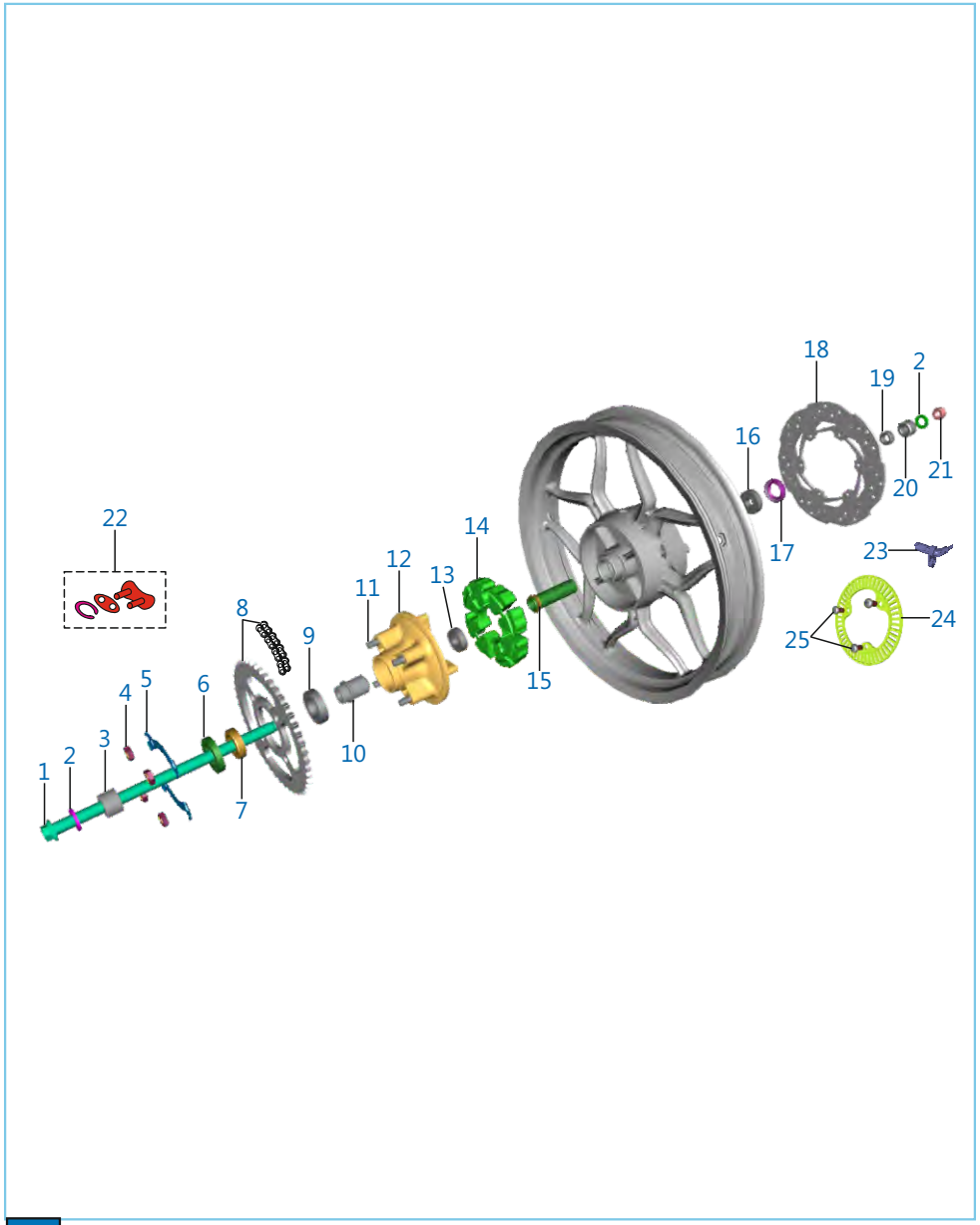

Plate No.: 43

Rear Hub - Twin Disc

No.	Part No.	Description	Single Disc	Twin Disc	Remarks
1	JF 1312 36	Axle-m14x1.5xl 309xblack	–	1	
2	LD B000 29	Washer Rear Axle Rh	–	2	
3	DK 1510 14	Spacer For Coupling	–	1	
4	LC B000 05	Nut Hex A/f 17 M10x1.25x6h	–	4	
5	PF 1312 20	Washer Lock For Nut A/f17	–	2	
6	DK 1510 12	Seal_oil Coupling 47x28x7	–	1	
7	DS 1510 57	Dust Cover Rear	–	1	
8	36 JF01 67	Kit Chain Sprocket	–	1	
9	DK 1510 13	Bearing Coupling 47x25x12	–	1	
10	DK 1510 15	Sleeve	–	1	
11	DS 1510 73	Stud - 4 Rubber	–	4	
12	JC 1510 16	Coupling (black)	–	1	
13	39 2241 20	Bearing - Ball	–	1	
14	JG 1312 19	Coupling Rubber	–	1	
15	DK 1510 22	Collar Bearing Assly	–	1	
16	39 2242 20	Bearing - Ball	–	1	
17	30 1510 82	Seal Oil	–	1	
18	JL 1319 30	Disc Rear Dia 230mm	–	1	
19	DK 1510 82	Spacer Ii	–	1	
20	DK 1510 81	Spacer I	–	1	
21	LC J000 02	Nut U-m14x1.5xheight 12.5xblack	–	1	
22	JD 1410 03	Chain Link Lock Set	–	1	
23	DK 2011 64	Sensor Speed Wheel	–	1	EURO IV
24	JU 1318 02	Sensor Disc Rear	–	1	EURO IV
25	JG 1312 20	Screw Pan Cross-m6x1xl12xprecoat	–	3	EURO IV

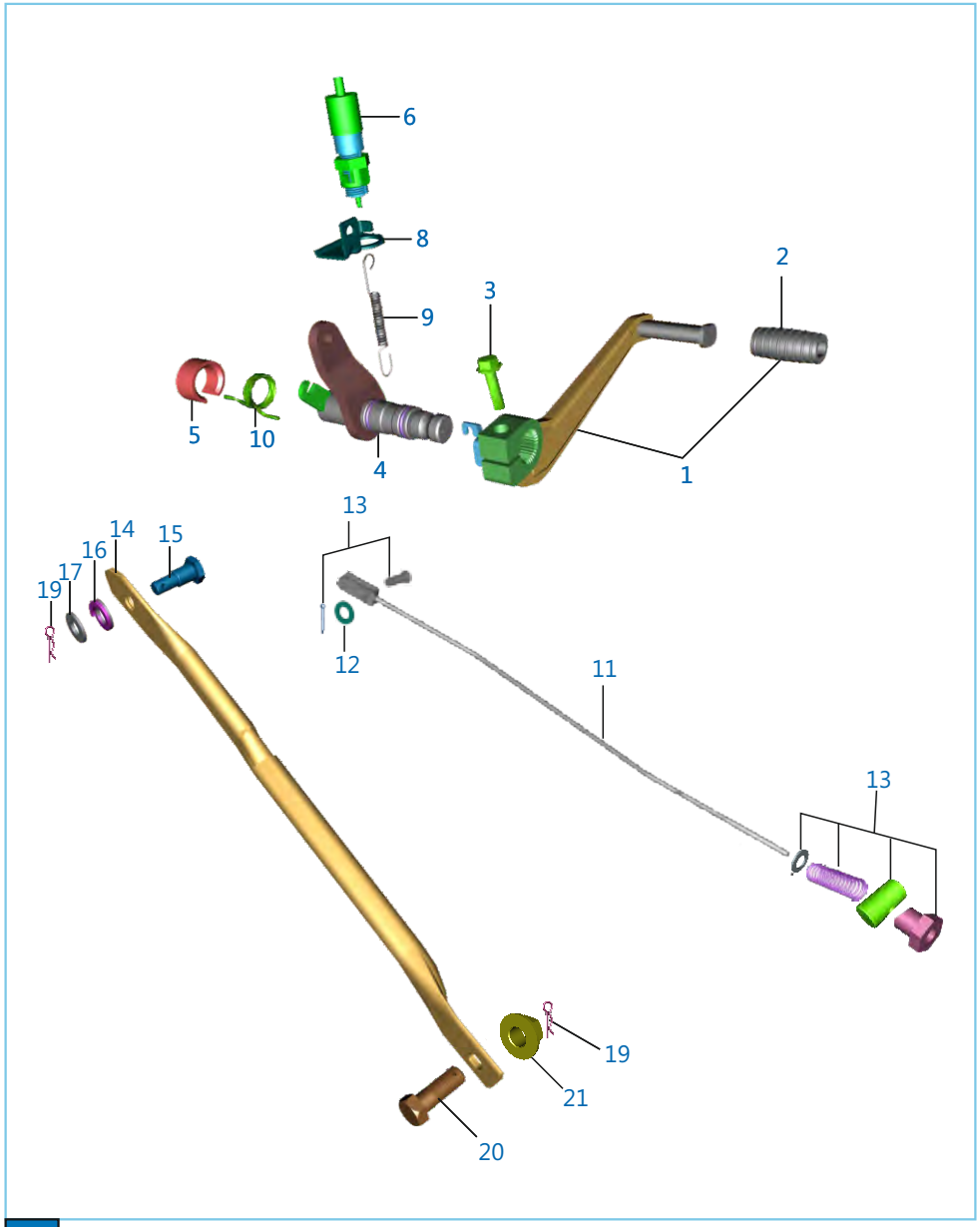

Plate No.: 44

Rear Brake Pedal

No.	Part No.	Description	Single Disc	Twin Disc	Remarks
1	JF 1610 01	Brake Pedal	1	–	
	JF 1610 09	Assembly Pedal Brake	–	1	
2	DG 1013 39	Damper	1	1	
3	59 0400 48	Bolt Flanged	1	–	
	KA DD08 30	Bolt Flange	–	1	
4	JL 1610 05	Shaft Assly Brake Lever	1	–	
	JL 1610 10	Shaft Assy Brake Lever-disc	–	1	
5	DH 1910 13	Spacer Brake Shaft Assly	1	1	
6	31 2010 79	Switch Rear Brake	1	–	
	JL 4014 06	Brake Switch Rear	–	1	
7	39 2475 04	Hex Head Bolt	1	–	N.I
	LA D000 40	Bolt Flanged	–	1	
8	JL 1130 33	Bracket Rear Brake Switch	1	1	
9	JL 1610 06	Spring Rear Brake Switch	1	1	
10	DH 1910 06	Spring - Brake - Pedal	1	1	
11	JL 1318 10	Brake Rod	1	–	
12	39 0198 11	Washer	2	–	
13	36 JC00 03	Kit Hardware Rod Brake	1	–	
14	DJ 1510 42	Rod Torque	1	–	
15	DH 1510 29	Step Bolt	1	–	
16	39 0789 12	Spring Washer	1	–	
17	39 0454 11	Plain Washer	1	–	
18	39 0694 15	Hex Lock Nut	1	–	
19	39 0807 08	Split Pin	2	–	
20	DG 1910 48	Bolt	1	–	
21	39 1225 15	Hex Nut Flanged	1	1	
22	39 1537 21	O-Ring	2	2	N.I
23	30 1910 38	PIN	1	–	N.I

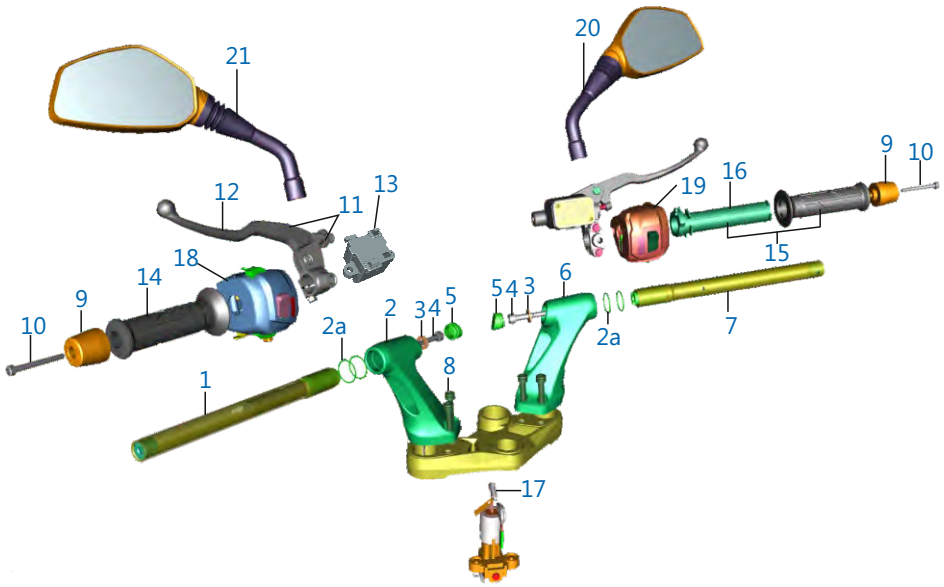

Plate No.: 45

Handle Bar Assembly

No.	Part No.	Description	Single Disc	Twin Disc	Remarks
1	JL 1510 21	Handle Bar Tube LH Assly.	1	1	
2	JF 1510 25	Holder Handle LH	1	1	
2a	JL 1510 38	O Ring	4	4	
3	39 1540 11	Washer - Plain	2	2	
4	LA C000 20	Bolt Socket M8X1.25Px55L	2	2	
5	JL 1510 28	Plug Handle Holder	2	2	
6	JF 1510 27	Holder Handle RH	1	1	
7	JL 1510 34	Handlebar Tube Assy RH	1	1	
8	DG 1810 08	Bolt - Socket	4	4	
9	JL 1510 35	Handlebar Weight	2	2	
10	39 2427 04	Bolt - Hexagon Socket Head Cap:M6	2	2	
11	JF 1610 08	Lever & Support Holder Assly LH	1	1	
12	JG 1610 08	Lever LH For New Clutch Switch	1	1	
13	JY 4014 04	Clutch Switch	1	1	
14	JL 1610 03	Handle Grip LH	1	1	
15	JL 1610 08	Grip Hand Assly RH	1	1	
16	JG 1510 22	Pipe - Throttle	1	1	
17	JF 2326 06	Lock Set 3 In 1	1	1	EURO III
	JF 2326 12	Lock Set With Tank Cap	1	1	EURO IV
18	JL 4014 00	Switch Control LH	1	1	
19	JL 4014 05	Switch Control RH	1	1	
20	JL 2316 01	Mirror Assly RH	1	1	
21	JL 2316 00	Mirror Assly LH	1	1	

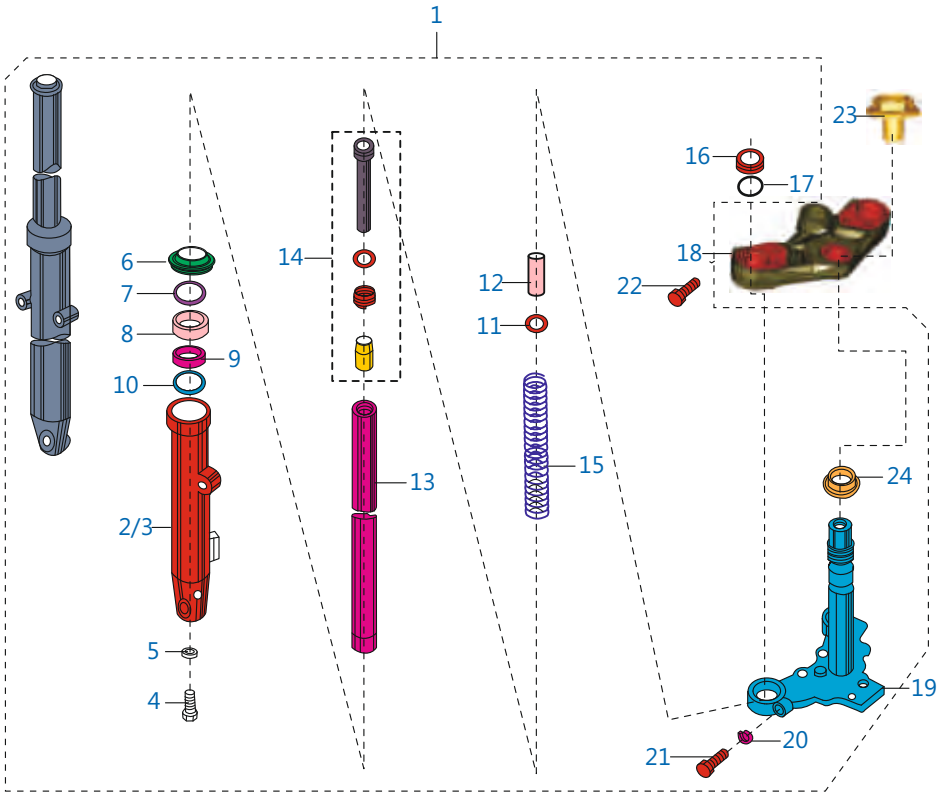

Plate No.: 46

Front Fork

No.	Part No.	Description	Single Disc	Twin Disc	Remarks
1	JF 1510 18	Fork Assly- Front	1	1	
2	JF 1510 31	Tube Outer LH	1	1	
3	JF 1510 32	Tube Outer RH	1	1	
4	30 1810 25	Soc. Head Bolt	2	2	
5	30 1810 26	Copper Washer	2	2	
6	36 DK00 20	Kit Outer Tube	2	2	
7	DJ 1810 88	Oil Seal Stopper	2	2	
8	DJ 1810 87	Oil Seal	2	2	
9	DS 1810 70	Guide Bush	2	2	
10	DS 1810 72	Washer	2	2	
11	DM 1810 10	Washer	2	2	
12	JF 1510 36	Spacer Tube	2	2	
13	JF 1510 33	Fork Pipe Inner	2	2	
14	36 JF00 31	Kit Cylinder Fork Complete	2	2	
15	JF 1510 34	Spring Main Spring	2	2	
16	DH 1810 15	Fork Bolt	2	2	
17	30 1810 29	'O' Ring	2	2	
18	JF 1510 19	Upper Bracket	1	1	
19	JF 1210 04	Under BKT Assly Complete	1	1	
20	DK 1810 25	Spring Washer	2	2	
21	DK 1810 28	Bolt	2	2	
22	DG 1810 08	Bolt - Socket	2	2	
23	JY 1510 11	Steering Top Bolt	1	1	
24	DG 1810 05	Bearing Cone	1	1	

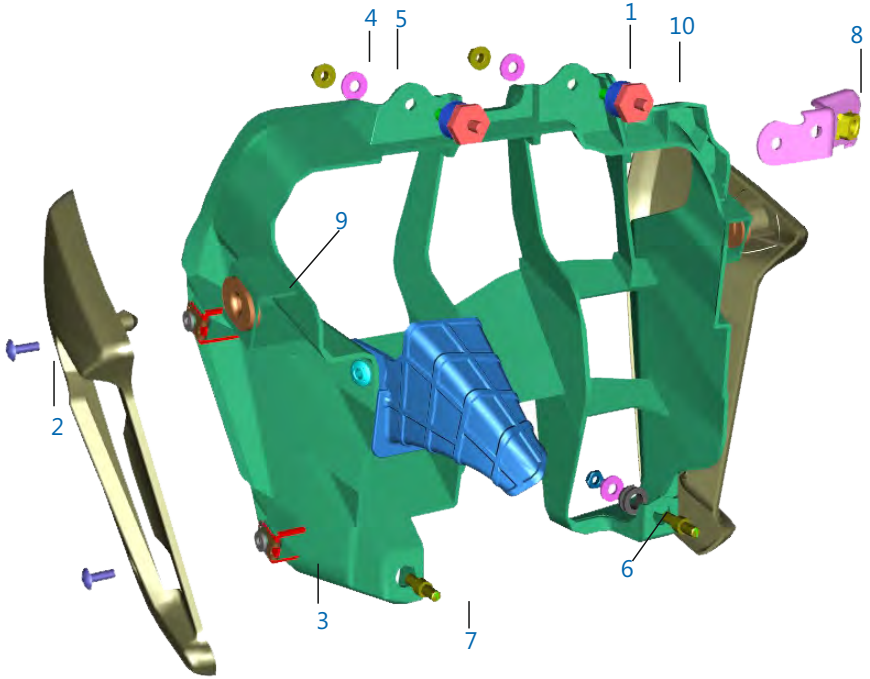

Plate No.: 47

Radiator Covers

No.	Part No.	Description	Single Disc	Twin Disc	Remarks
1	JF 1812 87	Cowl Oil Cooler - K16b	1	1	
2	KB UA05 14	Screw Truss	4	4	
3	DJ 1612 29	Clip Nut	4	4	
4	KC GA06 06	Nut Hex Thin	2	2	
5	39 0711 11	Plain Washer	4	4	
6	JL 1812 56	Grommet for Radiator Cowl	2	2	
7	JF 1138 22	Stud	1	1	
8	JF 1138 32	Bracket Horn Mtg	1	1	
9	DS 1410 12	Grommet - Side Cover :- Front	2	2	
10	JL 6012 16	Rubber Damper Radiator Mounting	2	2	

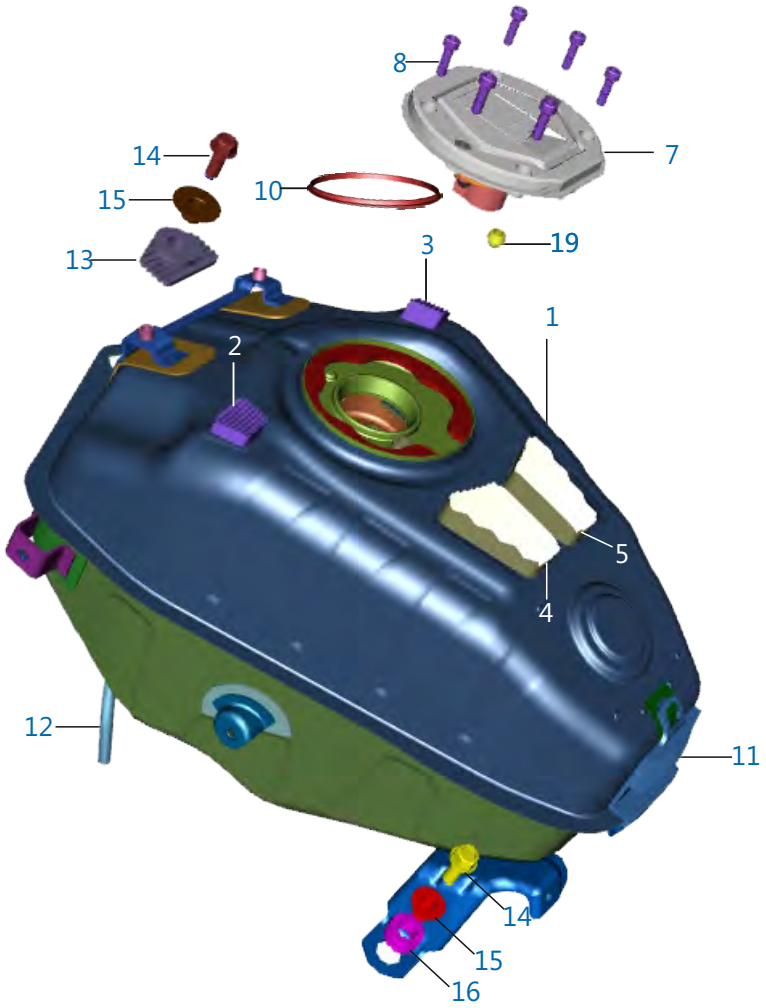

Plate No.: 48

Fuel Tank Assembly

No.	Part No.	Description	Single Disc	Twin Disc	Remarks
1	JL 1718 42	Fuel Tank Assy Non EVAP	1	1	EURO III
	52 JL07 50	Tank Assly	1	1	EURO IV
2	JL 1710 28	Damper Tank Cover Rest FR LH	1	1	
3	JL 1710 29	Damper Tank Cover Rest FR RH	1	1	
4	JL 1710 30	Damper Tank Cover Rest Centl LH	1	1	
5	JL 1710 31	Damper Tank Cover Rest Centl RH	1	1	
6	JL 1710 38	Beading Tank LH	2	2	N.I
7	JF 1716 08	Cap Tank	1	1	EURO III
	JF 2326 12	Lock Set With Tank Cap	1	1	EURO IV
8	KA CD05 16	Hex Soc Head Cap Screw M5X0.8	6	6	
9	JD 1710 59	EVAP Cap Rubber Seal	1	1	EURO IV
10	JL 1710 49	Damper Ring	1	1	
11	JL 1710 73	Damper Tank Cover Rest Rear	1	1	
12	JL 1710 63	Fuel Tube	1	1	
13	JL 1710 18	Grommet Tank Mtg Front	1	1	
14	KA DF08 20	Bolt Flanged	3	3	
15	JL 1710 19	Sleeve Tank Mtg Front	3	3	
16	JL 1710 20	Grommet Tank Mtg Rear	2	2	

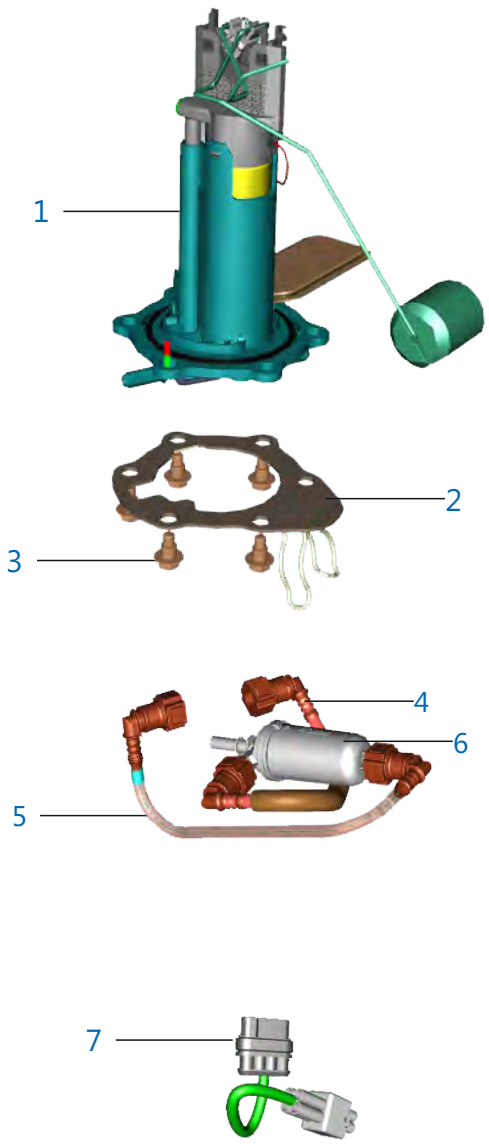

Plate No.: 49

Fuel Pump Assembly

No.	Part No.	Description	Single Disc	Twin Disc	Remarks
1	JL 1718 56	Fuel Pump Assly	1	1	
2	DT 1718 39	Plate Pressure K7 Fuel Pump	1	1	
3	LA D001 54	Bolt Flange--6	6	6	
4	DT 1710 89	Assy Tube Filter To Regulator	1	1	
5	JF 1710 51	Assy Tube Pump To Filter	1	1	
6	DT 1718 14	Fine Fuel Filter	1	1	
7	JY 4022 35	Pigtail Ph-3 Fuel Pump	1	1	

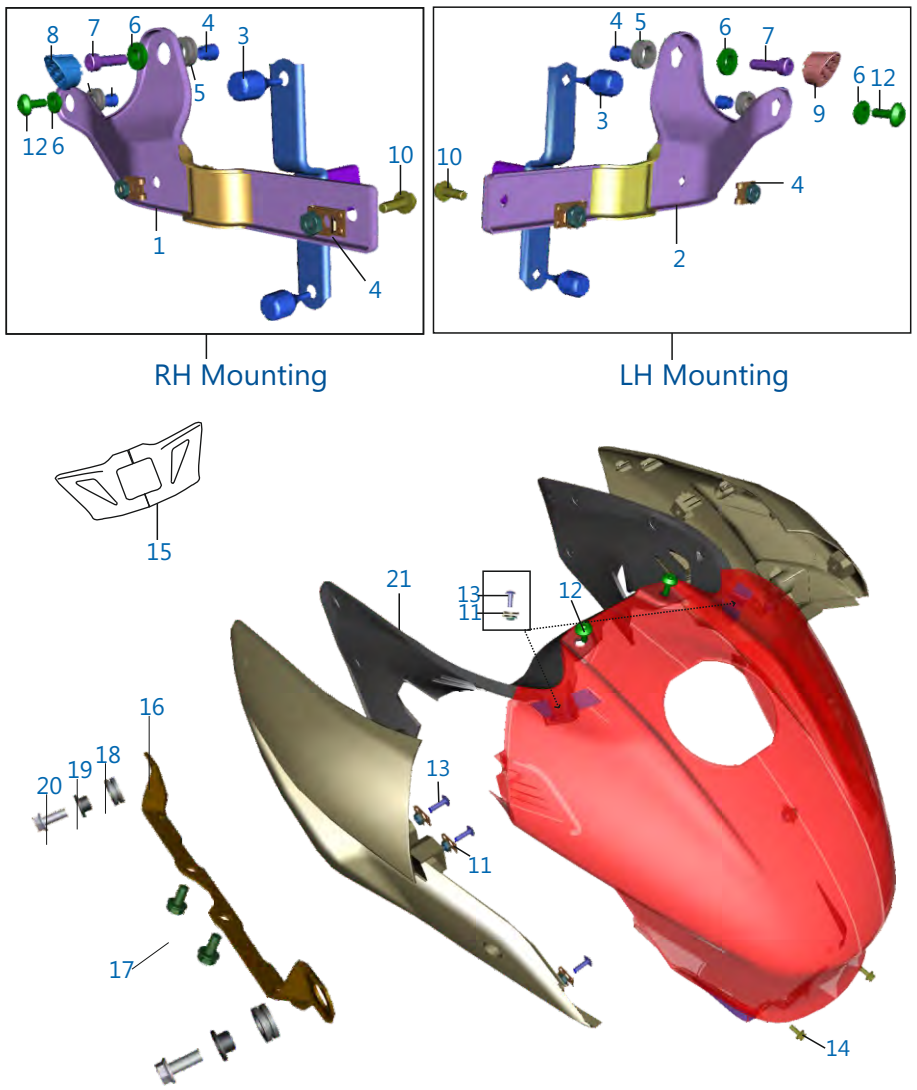

Plate No.: 50

Fittings - Petrol Tank Cover & Flap

No.	Part No.	Description	Single Disc	Twin Disc	Remarks
1	JF 1710 04	Bracket Side Cover Mtg RH	1	1	
2	JF 1710 09	Bracket Side Cover Mtg LH	1	1	
3	JL 1710 57	Damper	4	4	
4	JL 1710 71	Tank Cover Mtg Sleeve	8	8	
5	JL 1710 24	Damper Structure Mtg	2	2	
6	JL 1710 70	Rubber Grommet	8	8	
7	LA C000 63	Bolt - Socket :- M6	2	2	
8	JL 1710 62	Cover Mesh RH	1	1	
9	JL 1710 61	Cover Mesh LH	1	1	
10	KA DB05 16	Bolt Flanged	2	2	
11	DJ 1612 29	Clip Nut M5	16	16	
12	LA C000 22	Bolt Socket-Special Head	4	4	
13	KB UB05 16	Screw Truss	8	8	
14	KA DA05 12	Screw - Truss Cross : M5	2	2	
15	JL 1710 78	Pad Tank Cover	1	1	
16	JF 1138 09	Bkt Side Cover Mtg - K11	1	1	
17	KA DA06 14	Bolt-flange-kad St-a Dia-06 L-14	2	2	
18	JL 1710 24	Damper Structure Mtg	2	2	
19	JL 1710 40	Sleeve (Structure)	2	2	
20	39 0745 01	Screw Pan Cross - M6	2	2	
21	JF 1710 01	Cover Assly Tank Middle	1	1	

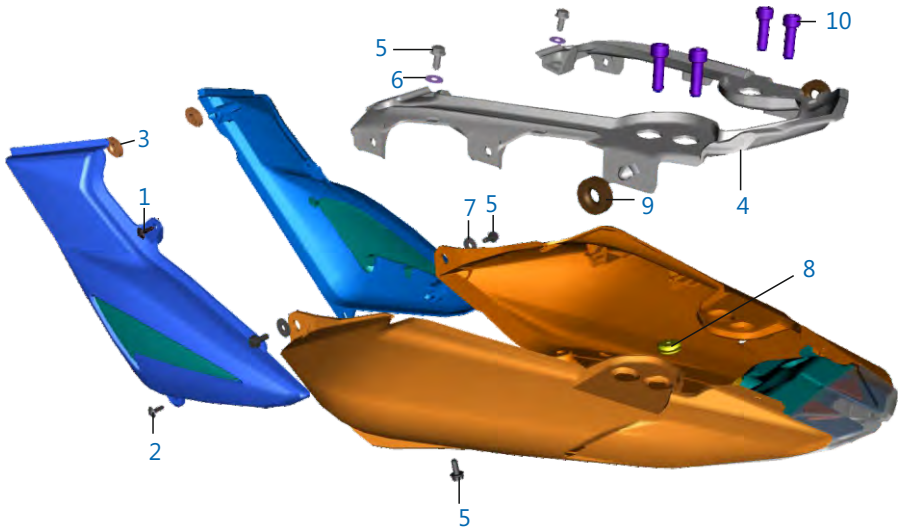

Plate No.: 51

Fittings - Side Cover & Seat Cowl

No.	Part No.	Description	Single Disc	Twin Disc	Remarks
1	JL 1812 88	Step Screw	2	2	
2	KB UA06 12	Screw Truss	2	2	
3	DS 1410 12	Grommet Side Cover	4	4	
4	JL 1812 14	Seal Cowl Inner	1	1	
5	39 1943 04	Bolt Flanged	4	4	
6	LD B000 23	Washer Plain	2	2	
7	39 0722 11	Washer Plain	2	2	
8	DJ 2011 73	Grommet For Cable RR fender	2	2	
9	DH 1611 58	Grommet Side Cove Rear	2	2	
10	LA C000 35	Bolt Socket	4	4	

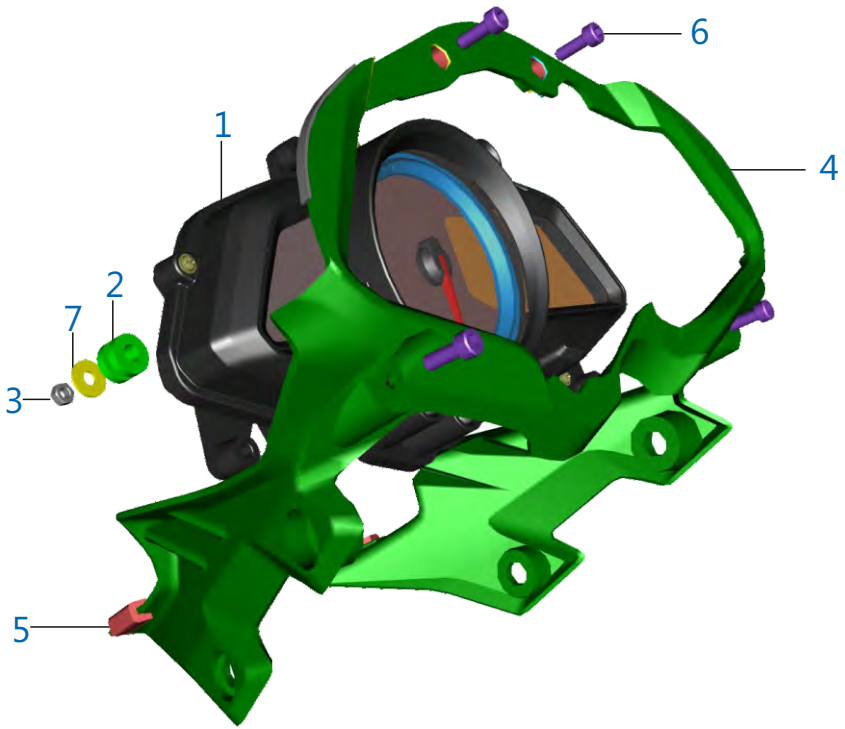

Plate No.: 52

Meter Assembly

No.	Part No.	Description	Single Disc	Twin Disc	Remarks
1	JF 4024 11	Speedometer Assembly	1	1	EURO III
	JF 4024 12	Speedometer Assembly ABS	1	1	EURO IV
2	JG 1812 38	Grommet Dashboard	3	3	
3	KC AA05 04	Nut - Hexagon :- M5 X 0.8	3	3	
4	JL 1812 41	Assembly Speedo Flap	1	1	
5	JB 1812 23	Beading Speedo Flap	2	2	
6	LA C000 54	Bolt-Socket	4	4	
7	LD B000 07	Washer Plain	3	3	

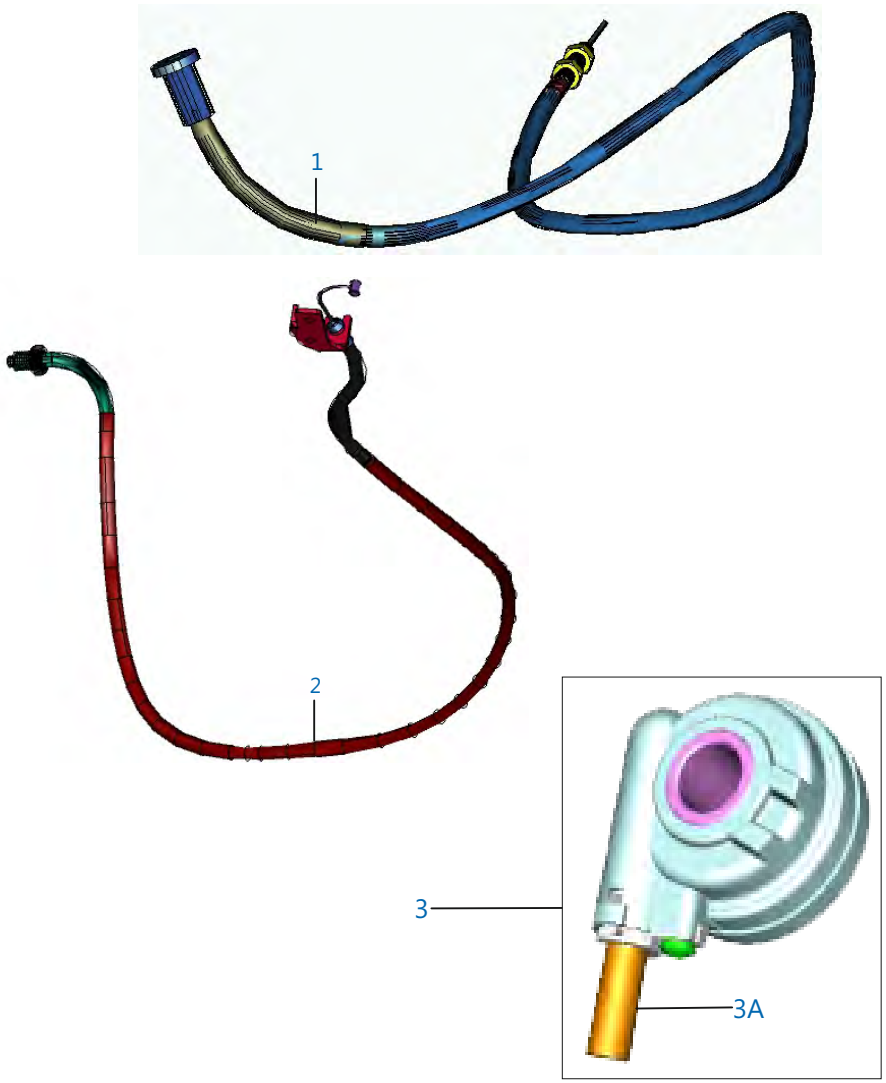

Plate No.: 53

Control Cables

No.	Part No.	Description	Single Disc	Twin Disc	Remarks
1	JF 1612 02	Cable Throttle	1	–	
	JF 1612 03	Cable Throttle - K15	–	1	
2	JF 1612 01	Cable Clutch	1	1	
3	DH 2010 79	Speed Sensor Cable With Case	1	1	EURO III
3A	DH 2010 80	Sensor Speed Cable	1	1	EURO III

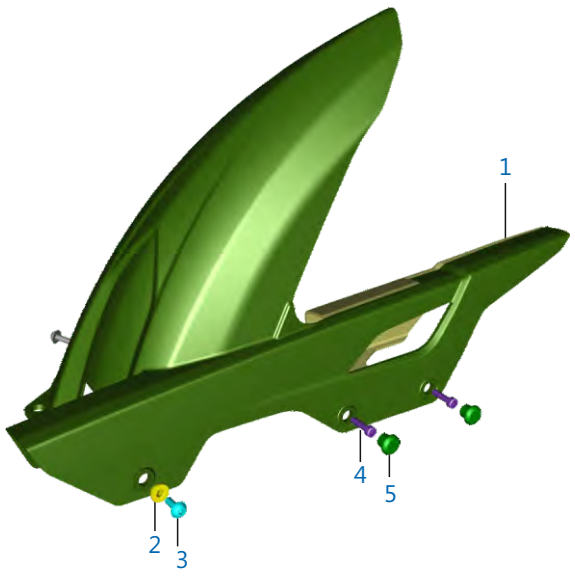

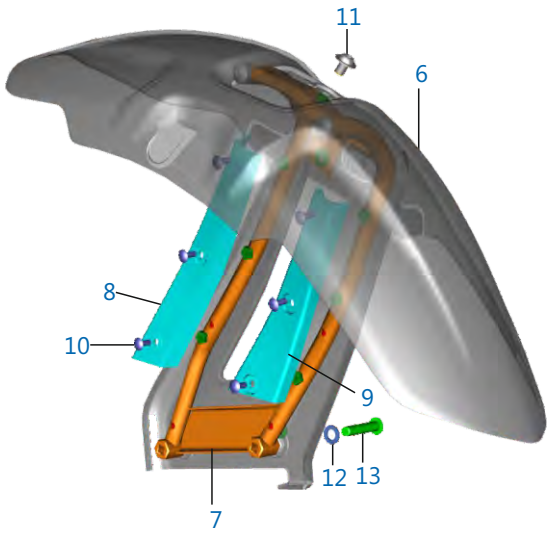

Plate No.: 54

Chain Case & Hugger Rear

No.	Part No.	Description	Single Disc	Twin Disc	Remarks
1	JF 1812 11	Cover Assly Chain	1	–	
	JF 1813 40	Cover Assembly Chain	–	1	
2	JL 1812 97	Collar	7	7	
3	LA C000 54	Bolt	7	7	
4	KA CB06 22	Bolt Socket	2	2	
5	JL 2312 09	Plug Saree Guard	2	2	
6	JF 1814 09	Assembly Hugger Rear	1	–	
	JF 1814 64	Fender Hugger Assembly	–	1	
7	JF 1810 05	Tube Rear Hugger Mtg	1	–	
	JF 1814 66	Tube Hugger	–	1	
8	JL 1814 07	Cover Hugger Rear I	1	–	
	JF 1814 67	Cover Tube Hugger I	–	1	
9	JL 1814 08	Cover Hugger Rear II	1	–	
	JF 1814 68	Cover Tube Hugger II	–	1	
10	KB UB04 10	Screw	6	–	
	KB UF04 10	Screw Truss	–	6	
11	LA C000 37	Bolt Soc-Special Head	3	3	
12	39 1828 12	Washer - Spring	2	2	
13	LA C000 36	Bolt Special Socket	2	–	
	LA C001 28	Bolt Socket	–	2	
14	DS 2210 01	Plug	2	2	N.I

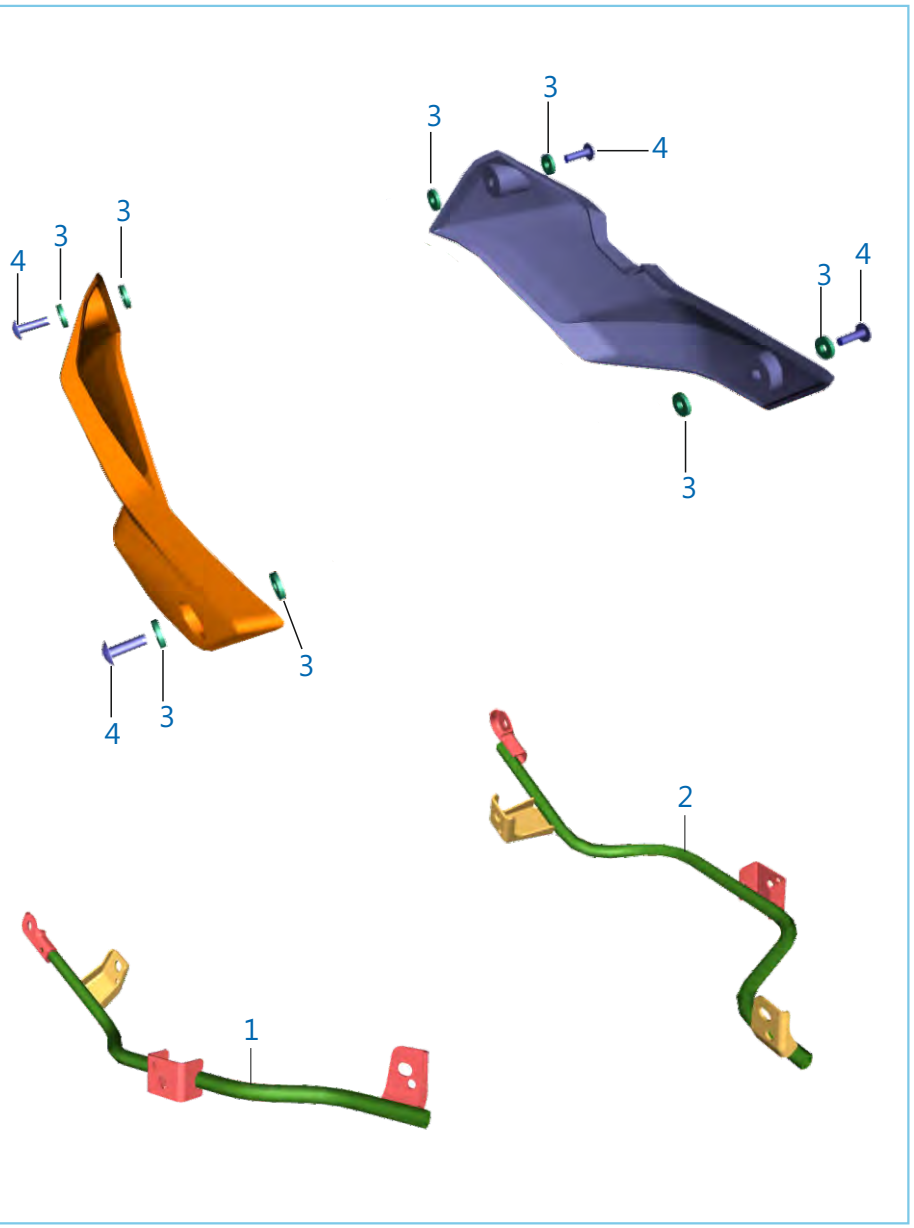

Plate No.: 55

Belly Pan Mounting

No.	Part No.	Description	Single Disc	Twin Disc	Remarks
1	JF 1813 31	Bracket Belly Pan LH	1	–	
	JF 1812 89	Bracket Belly Pan LH	–	1	
2	JF 1813 32	Bracket Belly Pan RH	1	–	
	JF 1812 90	Bracket Belly Pan RH	–	1	
3	JY 1812 55	Washer End Cap	4	4	
4	KB UA06 20	Screw Truss	2	–	
	LB U000 77	Screw Truss	–	2	
5	KA DA06 12	Bolt Flange	2	2	N.I
6	KB UA06 14	Screw Truss	2	–	N.I
	LB U000 39	Screw Truss	–	2	N.I
7	KA DF08 75	Bolt Flanged	1	1	N.I

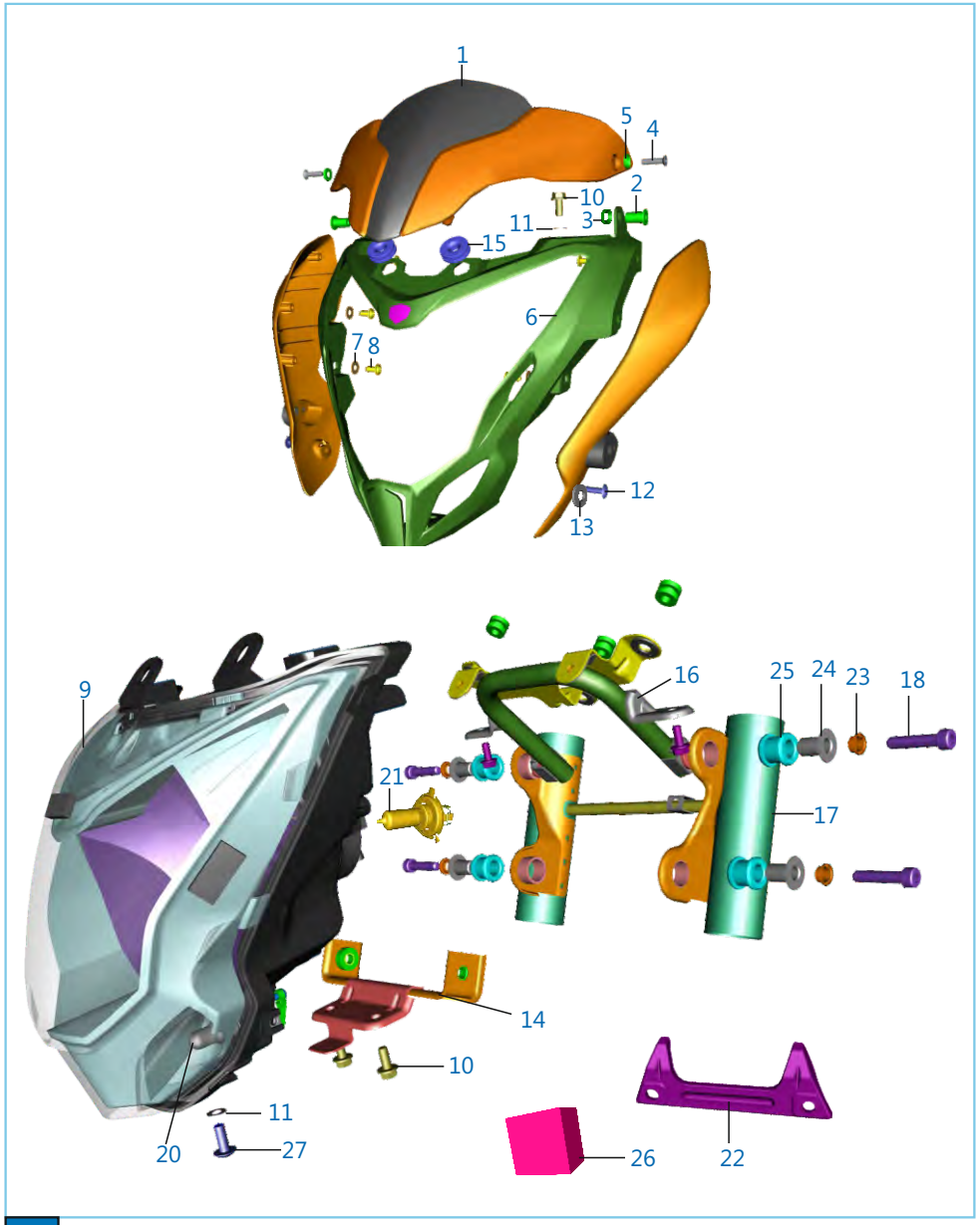

Plate No.: 56

Head Lamp & Fairing

No.	Part No.	Description	Single Disc	Twin Disc	Remarks
1	JL 1810 08	Windshield Assembly	1	1	
2	JG 1812 36	Well Nut - M5 X 16 L	2	2	
3	JG 1812 35	Washer Special	2	2	
4	LB S000 02	Screw M5X20Lx4.8	2	2	
5	JL 1812 47	Grommet Wind Screen Mounting	2	2	
6	JL 1812 03	Fairing	1	1	
7	KD BA05 12	Washer Plain Small	6	6	
8	LB R000 02	Self Tapping Screw - Dia 5	6	6	
9	JF 4010 17	Head Lamp Assy	1	1	
10	KA DE06 14	Bolt - Flanged	2	2	
11	KD AA06 11	Washer - Plain	3	3	
12	KB UA05 16	Screw - Truss - M5 X 16L, 4.8	2	2	
13	39 2141 24	Washer	2	2	
14	JL 1812 36	Bracket Lower Mtg	1	1	
15	JL 1812 49	Damper Head Lamp	2	2	
16	JL 1812 37	Bracket Upper Mtg	1	1	
17	JF 1812 10	Lamp Shade assly.	1	1	
18	KA CH08 35	Bolt Pivot Mass Carrier	4	4	
19	36 JL00 17	Kit Wind Shield Mtg	1	1	N.I.
20	DH 1910 37	Lamp 12V	2	2	
21	CL 2010 23	Head Lamp Bulb (E)	1	1	
22	JL 1812 83	Bracket Wind Shield	1	1	
23	JL 1812 57	collar Fairing	4	4	
24	PA 1812 93	Collar Fairing Mtg.	4	4	
25	PA 1812 92	Grommet Fairing Mtg.	4	4	
26	JL 1812 63	Foam Strip	1	1	
27	KB UA06 16	Screw Truss	1	1	

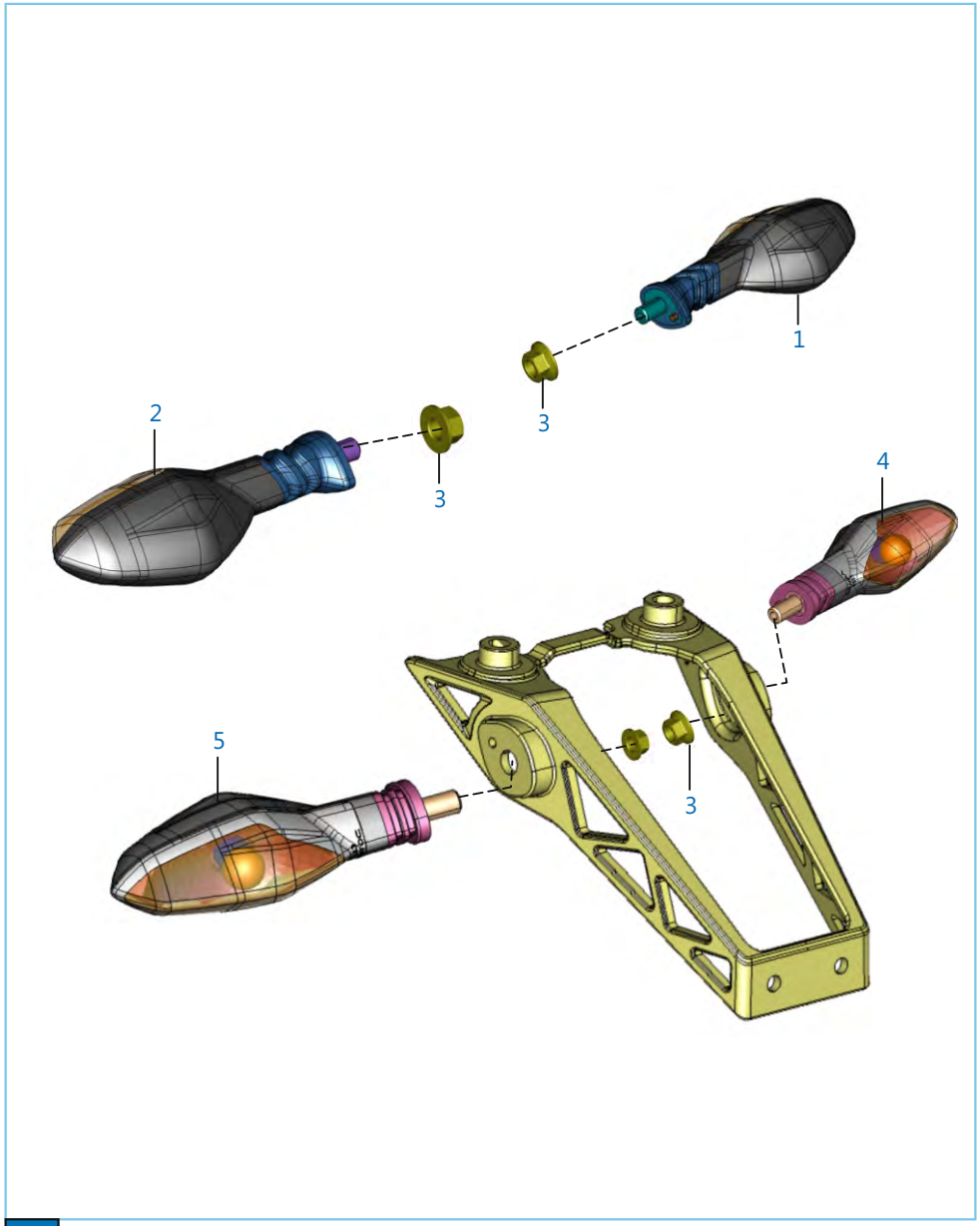

Plate No.: 57

Indicator Light Assembly

No.	Part No.	Description	Single Disc	Twin Disc	Remarks
1	JL 4010 06	Indicator Assy Front RH	1	1	
2	JL 4010 05	Indicator Assy FR LH	1	1	
3	KC GD10 10	Nut-Hexagon with Flange:M10	2	2	
4	JL 4010 04	Indicator Assy RR RH	1	1	
	DT 4010 16	Indicator Assy RR RH	1	1	Turkey
5	JL 4010 03	Indicator Assy RR LH	1	1	
	DT 4010 15	Indicator Assy RR LH	1	1	Turkey

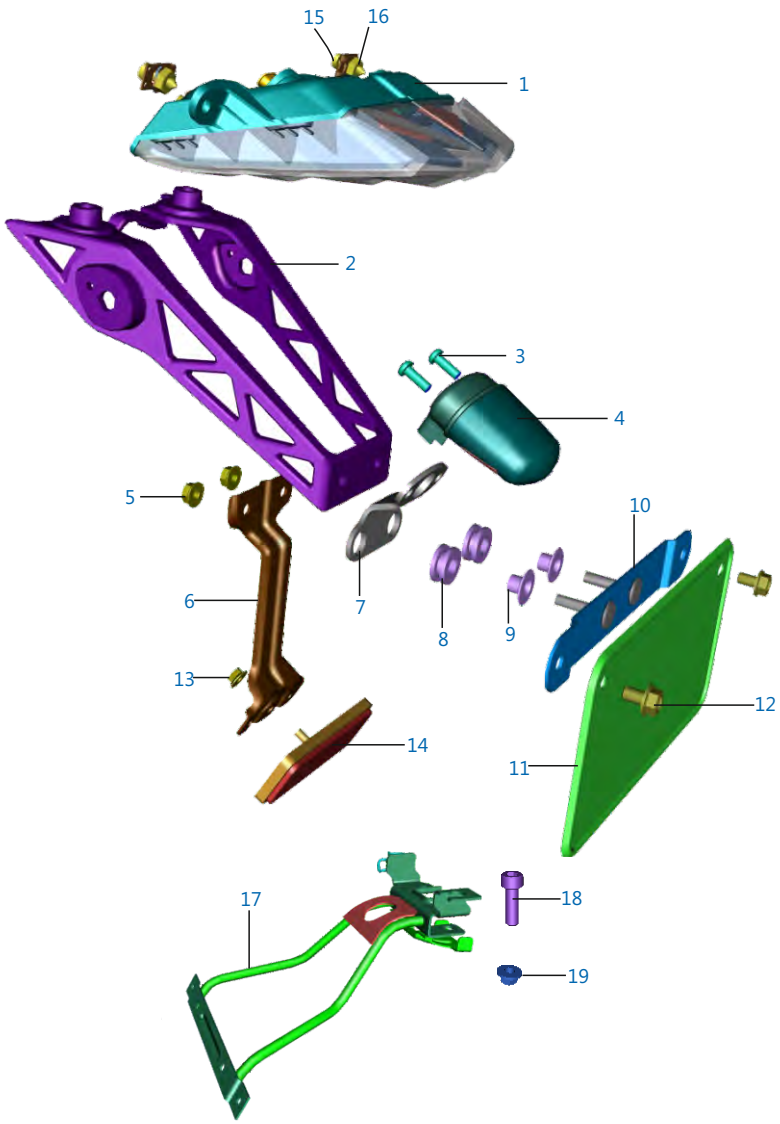

Plate No.: 58

Tail Lamp Assembly / Front Number Plate

No.	Part No.	Description	Single Disc	Twin Disc	Remarks
1	JL 4010 02	Lamp Tail Assembly	1	1	
2	56 JL02 3G	Bracket Rear Blinker Mtg	1	1	
3	KB BA05 14	Screw Pan Cross	2	2	
4	JD 4010 07	Rear Number Plate Lamp	1	1	
5	KC GD06 06	Nut Hex Flanged	2	2	
6	JL 1138 03	Bracket Reflector	1	1	
	JL 2328 13	Bracket Rear Number Plate Mtg	1	–	Turkey
7	JL 1138 10	Bracket Number Plate Illumination	1	1	
	JL 1138 22	Bracket Number Plate Illumination	1	1	Turkey
8	JL 1138 11	Grommet Illumination Bracket	2	2	
9	JL 11 3812	Sleeve	2	2	
10	JL 2328 08	Bracket RR Number Plate Mtg.	1	1	N.A. for Turkey
11	DP 1611 45	Number Plate	1	1	N.A. for Turkey
12	KA DD06 10	Bolt Flanged	2	2	N.A. for Turkey
13	39 2484 15	Nut Hex Flanged	1	1	
14	JG 4010 36	Reflector Reflex	1	1	
15	39 1907 01	Screw Truss Cross	3	3	
16	DJ 1612 29	Nut Clip	3	3	
17	JL 2328 05	Bracket Number Plate	1	1	
18	59 0400 48	Bolt Socket	2	2	
19	LC A000 08	Nut	2	2	

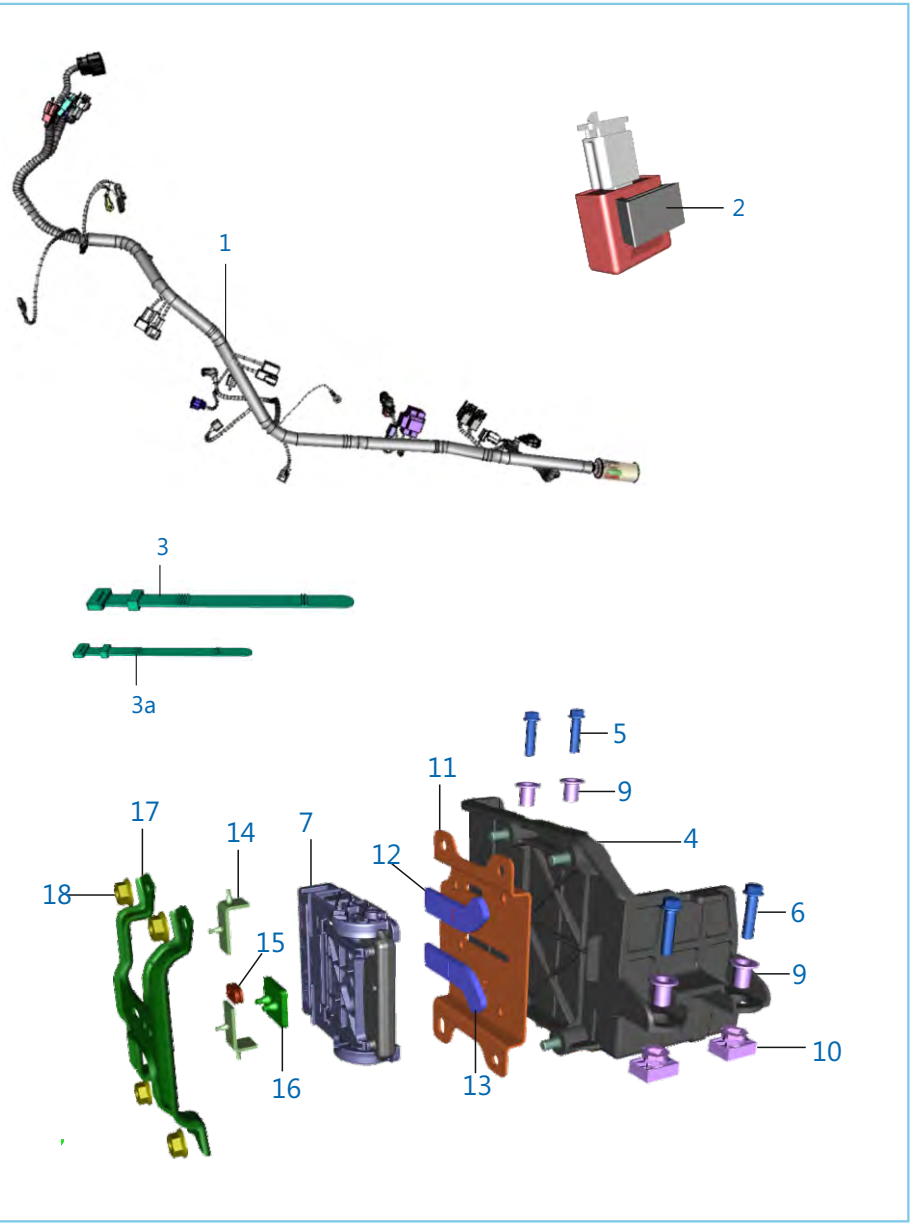

Plate No.: 59

Electrical

No.	Part No.	Description	Single Disc	Twin Disc	Remarks
1	JF 4022 37	Harness Wiring (Non ABS)	1	–	EURO III
	JF 4022 38	Harness Wiring (ABS)	1	–	EURO IV
	JF 4022 47	Harness Wiring	–	1	
2	DS 2010 25	Flasher D.C (Solid State)	1	1	
3	30 1910 48	Band	5	5	
3a	30 2010 64	Band	3	3	
4	JF 1812 72	Battery Case Epm 44	1	1	
5	KA EA06 22	Bolt - Flanged	2	2	
6	KA ED06 25	Bolt - Flanged	2	2	
7	JF 3514 04	EPM44 MTB Series For Prodn	1	1	Non Flashed
8	KB BF04 08	Pan Screw For ECU Fitment	4	4	N.I.
9	DT 1813 16	Sleeve Battery Case	4	4	
10	DT 1813 17	Grommet Battery case	4	4	
11	JF 1812 82	Bracket Ecu Mtg Lower	1	1	
12	JY 1138 72	Pad Resting Ecu C Sample LH	1	1	
13	JY 1138 73	Pad Resting Ecu C Sample RH	1	1	
14	JY 1710 07	Pad Rubber New Ecu My16	2	2	
15	JY 1138 77	Damper Ecu Locator	1	1	
16	JY 1138 74	Damper Ecu C Sample Mtg Top	1	1	
17	JY 1138 64	Bracket Ecu Mtg Top C Sample	1	1	
18	KC GA06 06	Nut Hex Flanged	4	4	

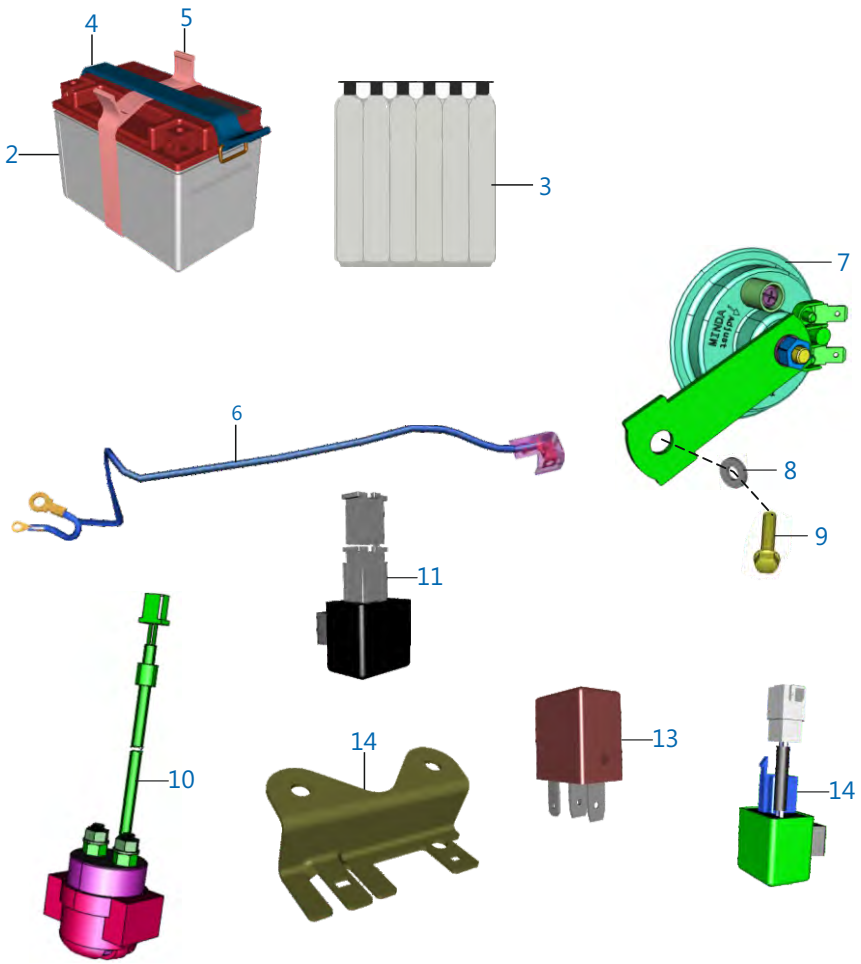

Plate No.: 60

Electrical Equipments

No.	Part No.	Description	Single Disc	Twin Disc	Remarks
1	36 JU00 15	Kit Battery + Acid Bottle	1	1	SR.2 & 3
2	JU 4018 03	Battery 8AH VRLA Dry	1	1	
3	JU 4018 02	Acid Bottle	1	1	
4	JL 1138 25	Band Battery Case	1	1	
5	DT 1810 22	Band Battery Case	1	1	
6	DT 4022 23	Cable Earth	1	1	
7	JF 4016 00	Horn	1	1	
8	39 1507 11	Washer - Plain	1	1	
9	39 1956 04	Hex Head Bolt - Flanged M8	1	1	
10	JN 3516 04	Starter Relay- With Grommet	1	1	
11	JL 4032 00	Termination Unit	1	1	
12	JL 4030 00	Inter Lock Relay	4	4	
13	JL 4022 19	PigTail Oil Pressure Switch	1	1	
14	JF 1138 44	Bracket Flasher Interlock Relay	1	1	



Plate No.: 61

Tool Kit

No.	Part No.	Description	Single Disc	Twin Disc	Remarks
1	DJ 2210 19	Tool Kit	1	1	
2	DK 2210 24	Band Tool Kit	2	2	

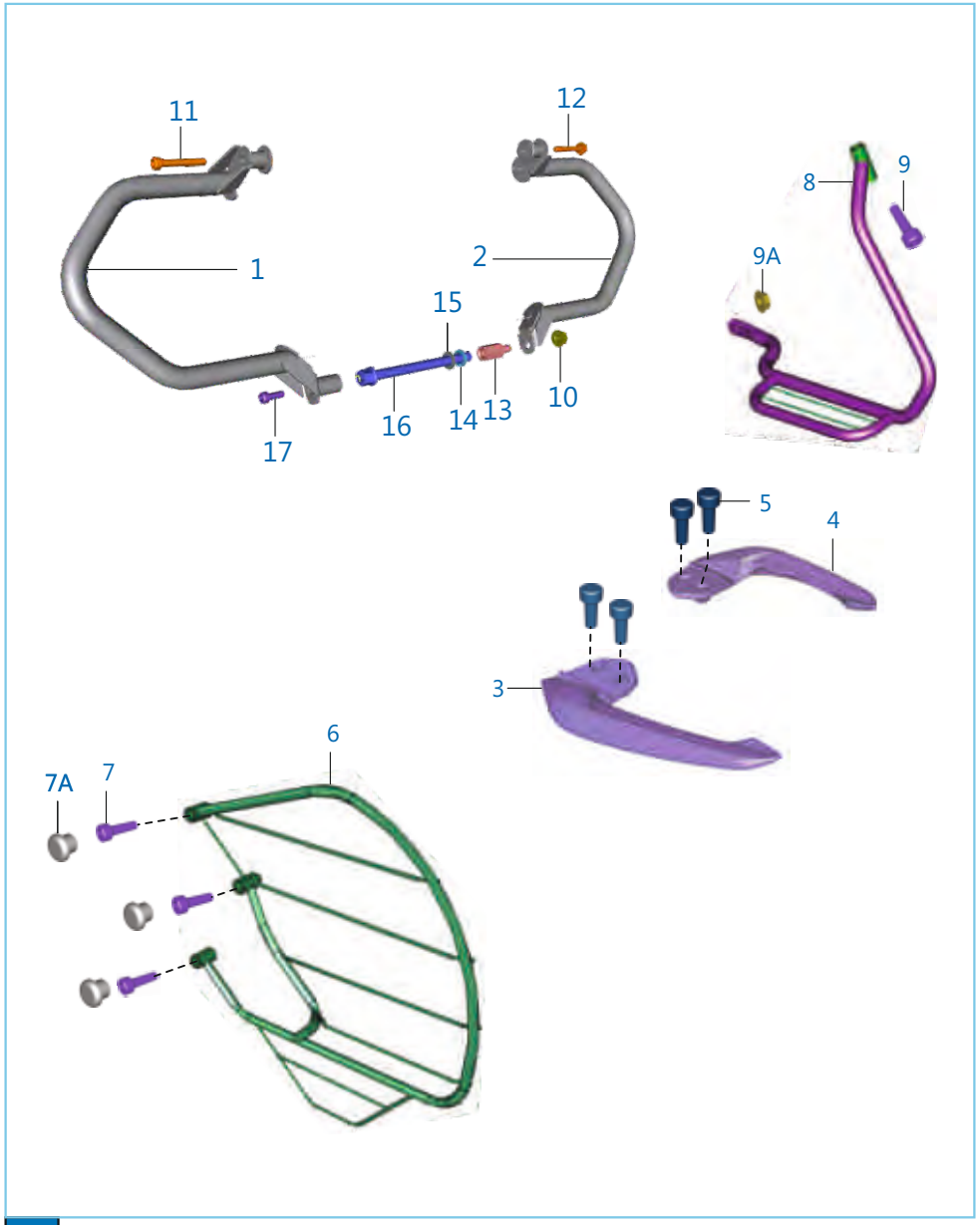

Plate No.: 62

Accessories / Grab Handle

No.	Part No.	Description	Single Disc	Twin Disc	Remarks
1	JF 2312 14	Guard Leg LH	1	1	
2	JF 2312 15	Guard Leg Guard RH	1	1	
3	JL 2314 04	Grab Handle Assy LH	1	1	
4	JL 2314 05	Grab Handle Assy RH	1	1	
5	LA C000 35	Bolt Socket M8 X 1.25	4	4	
6	JL 2312 02	Guard Saree	1	1	N.A. For Turkey
7	KA CB06 22	Bolt Socket L-22	3	3	N.A. For Turkey
7A	JL 2312 09	Plug	3	3	N.A. For Turkey
8	JL 2312 04	Ladies Foot Rest	1	1	
9	KA CA08 50	Bolt	1	1	
9A	39 1225 15	Nut	1	1	
10	KC GD08 08	Hex Nut	1	1	
11	LA C000 31	Bolt Socket	1	1	
12	39 1062 04	Bolt Flanged	1	1	
13	JU 2312 05	Nut Leg Guard Mounting	1	1	
14	LD C000 01	Washer Leg Guard	1	1	
15	KD AA10 18	Washer Plain	1	1	
16	JL 1110 54	Engine Mtg Bolt Front	1	1	
17	KA CH06 16	Bolt Socket-m6x1xl16xcl 10.9xblk	1	1	

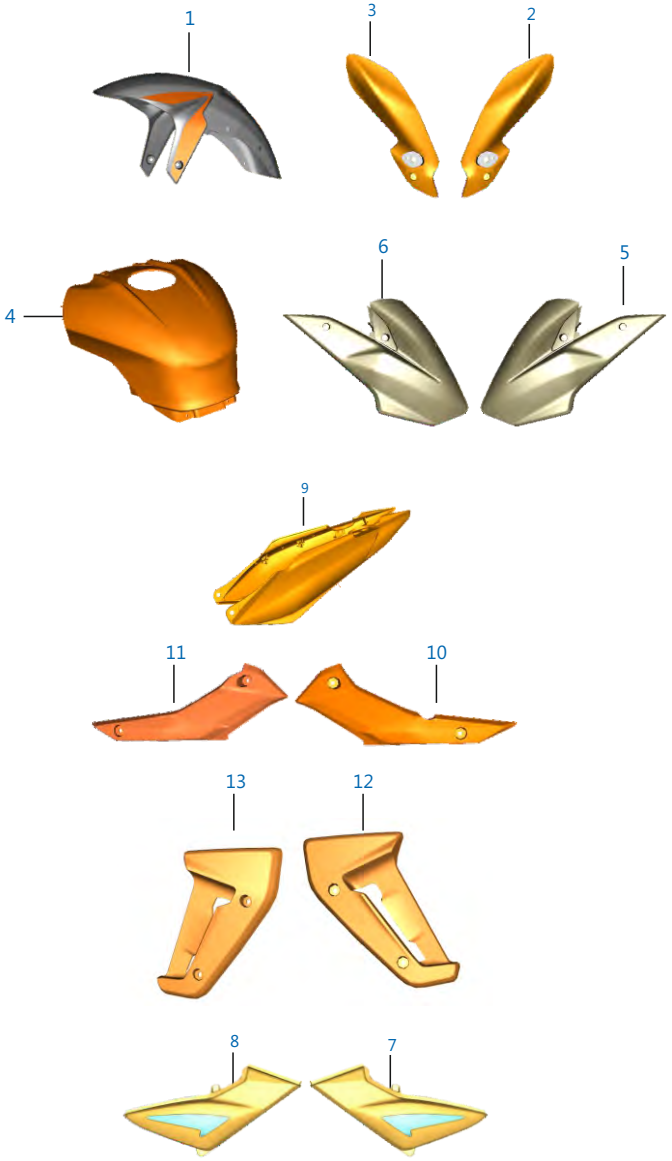

Plate No.: 63

Painted Parts

No.	Part No.	Description	Single Disc	Twin Disc	Remarks
1	52 JF02 29	Front Fender Assly P Red	1	1	
	52 JF02 28	Front Fender Assly Met White	1	1	
	52 JF02 30	Front Fender Assly Safire Blue	1	1	
	52 JF05 97	Front Fender + Pewter Grey Decal	1	1	
2	52 JL09 18	Side Mask LH Satin Black + Red Decal	1	1	
	52 JL09 36	Side Mask LH Satin Black + White Decal	1	1	
	52 JF04 34	Side Mask LH Satin Black + Blue Decal	1	1	
	52 JF06 03	Side Mask Lh Satin Blk +pewter Gre	1	1	
3	52 JL09 19	Side Mask RH Satin Black + Red Decal	1	1	
	52 JL09 37	Side Mask RH Satin Black +white Decal	1	1	
	52 JF04 35	Side Mask RH Satin Black + Blue Decal	1	1	
	52 JF06 04	Side Mask Rh Satin Blk + Pewter Gr	1	1	
4	52 JF04 11	Tank Cover Top Passion Red Dcal	1	1	
	52 JF04 27	Tank Cover Top Met Wh + Dcal	1	1	
	52 JF04 19	Tank Cover Top Safire Blue Dcal	1	1	
	52 JF05 94	Tank Cover Top Pewter Grey Dcal	1	1	
5	52 JF04 55	Tank cover LH Satin Blk + Pas Red	1	1	
	52 JF04 59	Tank Cover LH Sat Blk + M White +	1	1	
	52 JF04 57	Tank cover LH Sat Black + Saf Blue	1	1	
	52 JF05 92	Tank Cover Lh Sat Blk + Pewter Grey	1	1	
6	52 JF04 58	Tank cover RH Satin Blk + Pas Red	1	1	
	52 JF04 60	Tank Cover Rh Sat Blk + M White +	1	1	
	52 JF04 56	Tankcover Rh Sat Black + Saf Blue	1	1	
	52 JF05 93	Tank Cover Rh Sat Blk + Pewter Grey	1	1	

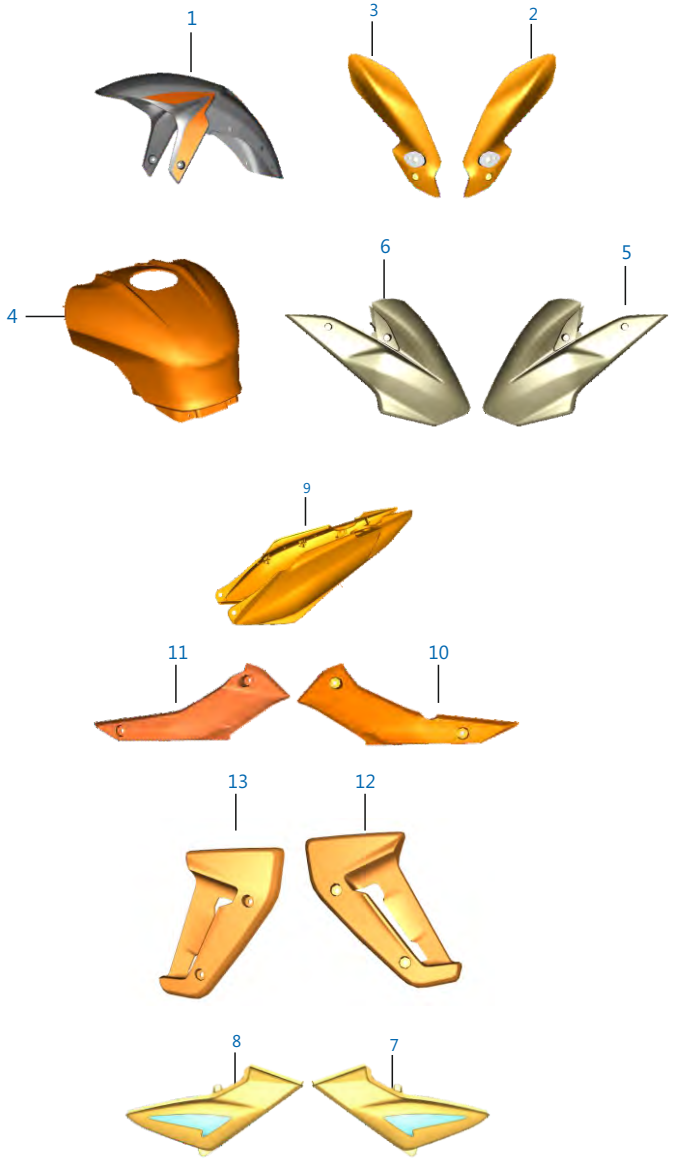

Plate No.: 63

Painted Parts

No.	Part No.	Description	Single Disc	Twin Disc	Remarks
7	52 JL10 53	CVR Side Assy LH Red Decal	1	1	
	52 JL10 61	CVR Side Assy LH White Decal	1	1	
	52 JF05 68	Asly Side Cover LH Satin Blk + Saf	1	1	
	52 JF06 81	Assy Side Cover LH Satin Blk Pegr	1	1	
8	52 JL10 55	Side Cover RH Satin Blk + Re	1	1	
	52 JL10 63	Side Cover RH Satin Blk + Wh	1	1	
	52 JF05 70	Side Cover RH Satin Blk + Safe	1	1	
	52 JF06 82	Asly Side Cover RH Satin Blk + Pe	1	1	
9	52 JF04 12	Seat Cowl Assly Satin Blk + Red Decal	1	1	
	52 JF04 28	Seat Cowl Assly Satin Blk + White Decal	1	1	
	52 JF04 20	Seat Cowl Assly Satin Blk + Blue Decal	1	1	
	52 JF05 90	Seat Cowl Satin Blk+pewter Grey Decal	1	1	
10	56 JF38 4R	Belly Pan LH Passion Red	1	1	
	56 JF38 5Y	Belly Pan LH Metallic Pearl White	1	1	
	56 JF38 5N	Belly Pan LH Saffire Blue	1	1	
	56 JF38 32	Belly Pan LH Glossy Pewter	1	1	
11	56 JF39 4R	Belly Pan RH Passion Red	1	1	
	56 JF39 5Y	Belly Pan RH Metallic Pearl White	1	1	
	56 JF39 5N	Belly Pan RH Saffire Blue	1	1	
	56 JF39 32	Belly Pan RH Glossy Pewter	1	1	
12	52 JF04 18	Shroud Cover LH + Decal	1	1	Common For All
13	52 JF04 26	Shroud Cover RH + Decal	1	1	Common For All

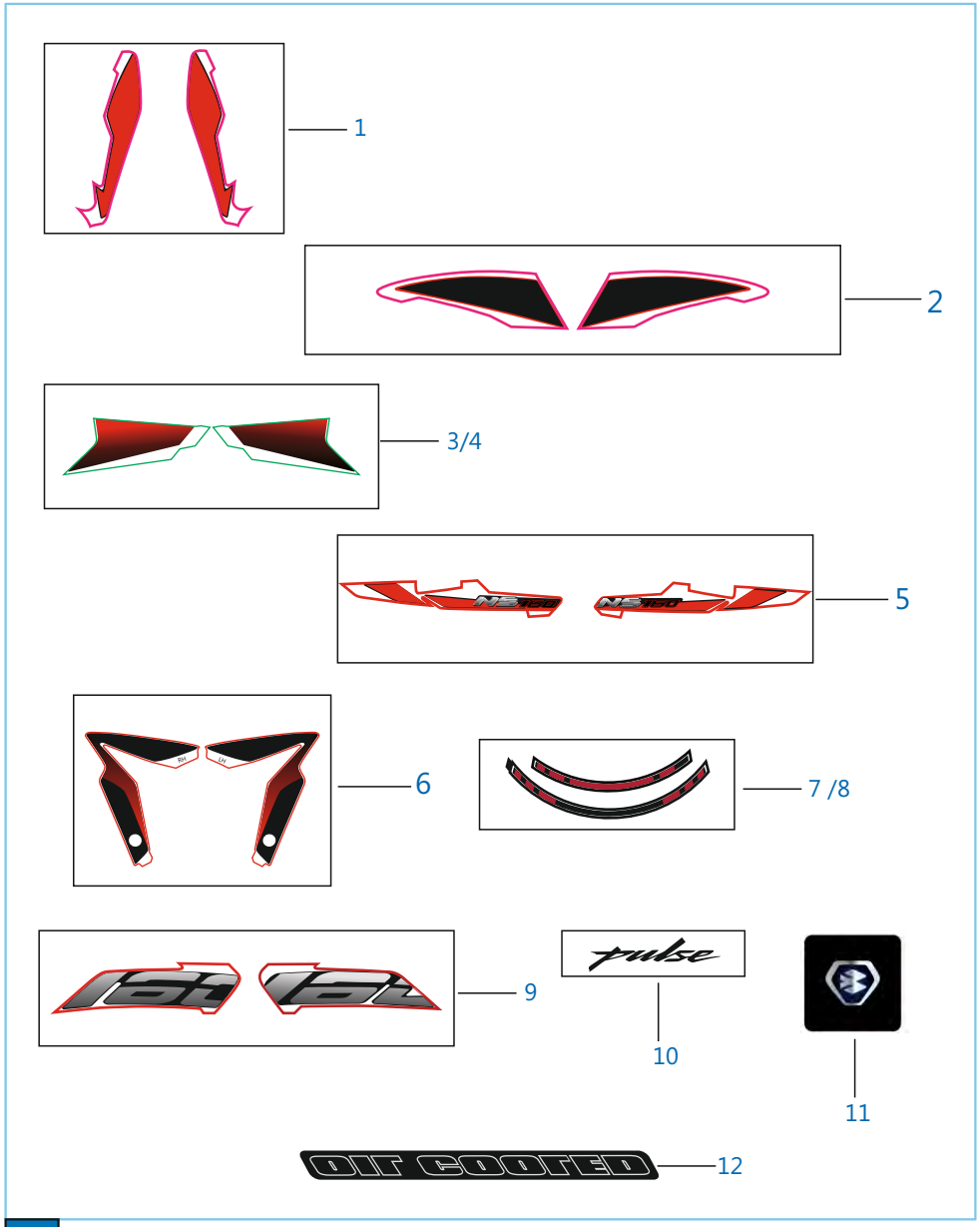

Plate No.: 64

Decals Sets

No.	Part No.	Description	Single Disc	Twin Disc	Remarks
1	36 JL01 14	Kit Dcl Fairing Red-black	1	1	
	36 JL01 18	Kit Dcl Fairing White-Black	1	1	
	36 JF01 24	Kit Dcl Fairing Blue-Black	1	1	
	36 JF01 47	Kit Dcl Fairing Gray Black	1	1	
2	36 JF01 19	Kit Dcl Tank Cvr Red-blk	1	1	
	36 JF01 21	Kit Dcl Tank Cvr Wht-blk	1	1	
	36 JF01 25	Kit Dcl Tank Cvr Blue-blk	1	1	
	36 JF01 49	Kit Dcl Tank Cvr Gray Black	1	1	
3	JL 2333 19	Decal Side Cover LH Red-black	1	1	
	JL 2333 21	Decal Side Cover LH White-gray	1	1	
	JF 2331 67	Decal Cover Side LH Blue-black	1	1	
	JF 2331 71	Decal Cover Side LH Grey-black	1	1	
4	JL 2333 20	Decal Cover Side RH Red-grey	1	1	
	JL 2333 22	Decal Cover Side RH White-grey	1	1	
	JF 2331 68	Decal Cover Side RH Blue-black	1	1	
	JF 2331 72	Decal Cover Side RH Grey-black	1	1	
5	36 JF01 20	Kit Dcl Seat Cowl Red-blck	1	1	
	36 JF01 22	Kit Dcl Seat Cowl Wht-blck	1	1	
	36 JF01 27	Kit Dcl Seat Cowl Blue-blk	1	1	
	36 JF01 50	Kit Dcl Seat Cowl Gray Black	1	1	
6	36 JF01 13	Kit Dcl Fender Red-Gry	1	1	
	36 JF01 15	Kit Dcl Fender Wht-Gry	1	1	
	36 JF01 23	Kit Dcl Fender Blue-Black	1	1	
	36 JF01 46	Kit Dcl Fender Gray Black	1	1	

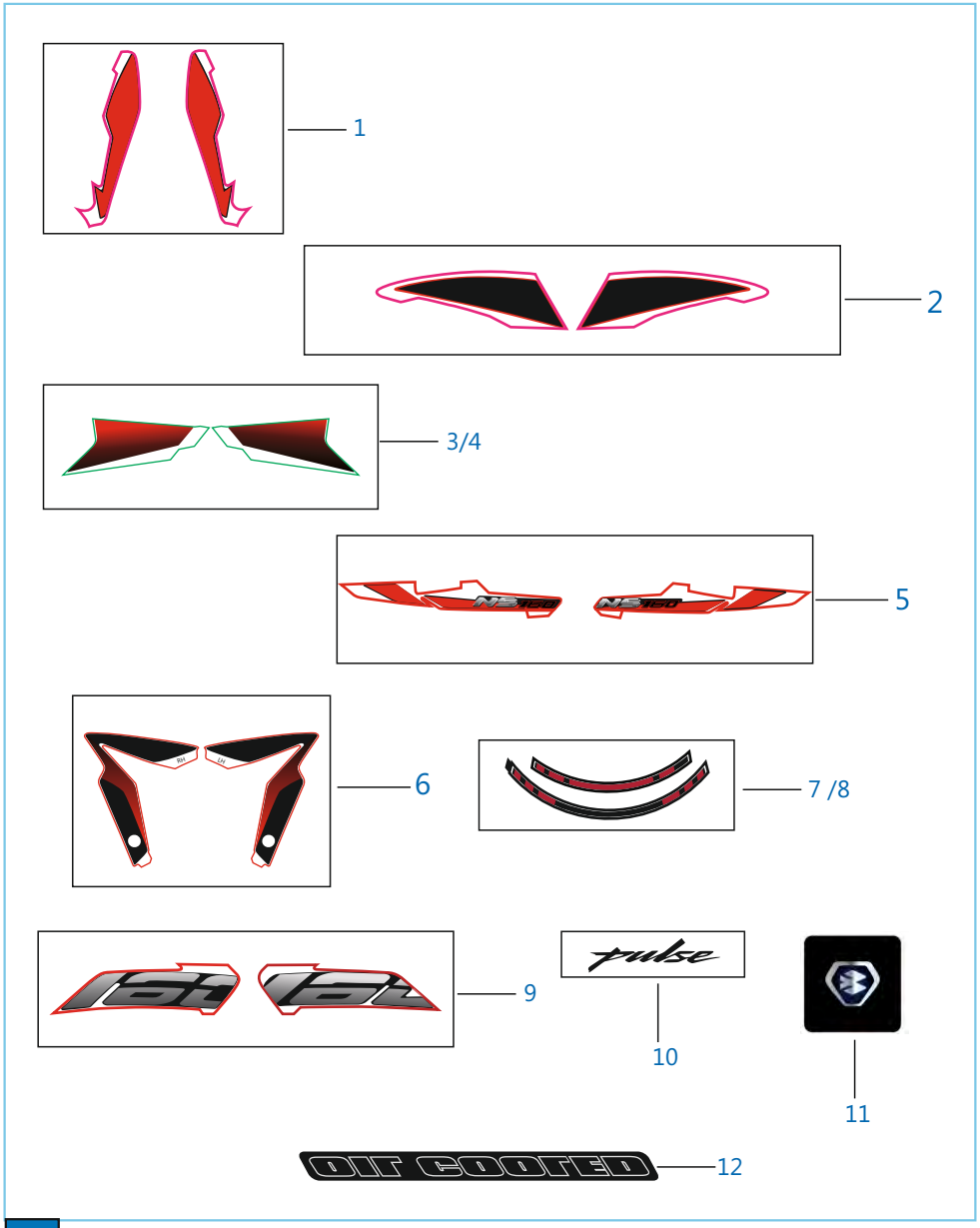

Plate No.: 64

Decals Sets

No.	Part No.	Description	Single Disc	Twin Disc	Remarks
7	JL 2332 55	Decal Wheel I Red-grey	1	1	
	JL 2332 69	Decal Wheel I White-gray	1	1	
	JL 2332 81	Decal Wheel I Blue-grey	1	1	
8	JL 2332 56	Decal Wheel II Red-grey	1	1	
	JL 2332 70	Decal Wheel II White-gray	1	1	
	JL 2332 82	Decal Wheel II Blue-grey	1	1	
9	36 JF01 28	Kit Tank Cvr Dcl NS160	1	1	
10	JL 2333 16	Decal Tank 3D Pulsar-Grey	2	–	
	JL 2331 85	3D Decal Tank (Pearl Metallic White)	2	–	
	JL 2333 16	Decal Tank 3D Pulsar-Grey	–	2	
11	JL 2330 02	B Logo Decal Front	1	1	
12	JF 2331 24	Decal Shroud-Oil Cooled	2	2	

Kit List

pulsar NS160 EURO III / IV

Sr No	Kit Part No.	Kit Description	Consisting of Following Parts		
			Part No.	Description	Qty/Kit
1	36JF0003	KIT ASSLY MAGNETO	JE541237	COVER MAGNETO K11	1
			JV541207	CAP TDC FINDER	1
			JL541223	LABEL B-BAJAJ	1
			JA541005	BUSH BENDIX	1
2	36JF0005	KIT CHAIN GUIDE	JE541032	CHAIN GUIDE SLACK SIDE K11	1
			JE521021	CHAIN GUIDE TIGHT SIDE K11	1
3	36JF0007	KIT BOSS KICK	JE621205	BOSS KICK LEVER K11	1
			JZ621203	SPRING KICK LEVER	1
			30101236	BALL STEEL	1
			22150241	WASHER - PLAIN	1
			30101235	PIN	1
			39085517	E-TYPE CIRCLIP	1
4	36JF0025	KIT VALVE REPAIR	JD511203	SEAT VALVE SPRING	2
			39201719	SEAL VALVE STEM	2
			JE511216	SPRING VALVE -K11	2
			JD511205	RETAINER VALVE SPRING	2
			DG101029	COTTER VALVE	4
5	36JC0003	KIT HARDWARE ROD BRAKE	30191038	PIN	1
			39021911	WASHER PLAIN	1
			39080808	PIN-SPLIT	1
			30191035	SPRING	1
			JC191006	PIN BRAKE REAR	1
			JC191007	NUT BRAKE ROD	
6	36JF0117	KIT CYL BLOCK PIST ASSLY Ns160	JE521028	CYLINDER BLOCK K11 UG	1
			JE521215	ASSEMBLY PISTON K11 UG	1
7	36JF0042	KIT PISTON RINGS NS160	JE521217	RING TOP PISTON K11 UG	1
			JE521218	RING SECOND PISTON K11 UG	1
			JE521219	RING OIL PISTON K11 UG	1
8	36JE0005	KIT CLUTCH PLATE SPRI	DP101110	PLATE - FRICTION	1
			DP101109	PLATE - FRICTION	1
9	36JZ0132	KIT STARTER CLUTCH REPAIR	YJZ14002	ROLLER STARTER CLUTCH-D150	1
			YJZ14003	SPRING STARTER CLUTCH-D150	1
10	36JL0013	KIT SEAT DAMPER-P200	JL191007	DAMPER SEAT	1
			DK211007	DAMPER SEAT FRONT	1
11	36JG0011	KIT STEERING HEAD BEARING	DK181050	CAGE BEARING STEERING TOP	1
			DG181045	BEARING CONE :- UPPER	1
			DG181005	BEARING CONE	1
			DG181003	WASHER	1
			DG181004	SEAL - OIL	1
			DK181051	CAGE BEARING STEERING BOTTOM	1
12	36JF0113	KIT DCL FENDER RED-GRY NS160	JF233088	DECAL FENDER FRONT LH RED-GREY	1

Kit List

pulsar NS160 EURO III / IV

Sr No	Kit Part No.	Kit Description	Consisting of Following Parts		
			Part No.	Description	Qty/Kit
			JF233091	DECAL FENDER FRONT RH RED-GREY	1
13	36JL0100	KIT DCL FAIRING RED-BLACK BS IV	JL233243	DECAL FAIRING LH RED-BLACK	1
			JL233244	DECAL FAIRING RH RED-BLACK	1
14	36JF0119	KIT DCL TANK CVR RED-BLK Ns160	JF233046	DECAL TANK UPPER LH RED - BLACK	1
			JF233049	DECAL TANK UPPER RH RED - BLACK	1
15	36JF0120	KIT DCL SEAT COWL RED-BLCK Ns160	JF233076	DECAL SEAT COWL UPPER -LH RED-BLACK	1
			JF233079	DECAL SEAT COWL UPPER -RH RED-BLACK	1
			JL233255	DECAL WHEEL I RED-GREY	1
			JL233256	DECAL WHEEL II RED-GREY	1
16	36JF0115	KIT DCL FENDER WHT-GRY NS160	JF233119	DECAL FENDER FRONT LH WHITE-GREY	1
			JF233120	DECAL FENDER FRONT RH WHITE-GREY	1
17	36JL0102	KIT DCL FAIRING WHT-BLK BS IV	JL233257	DECAL FAIRING LH WHITE-GRAY	1
			JL233258	DECAL FAIRING RH WHITE-GRAY	1
18	36JF0121	KIT DCL TANK CVR WHT-BLK NS160	JF233125	DECAL TANK UPPER LH WHITE-BLACK	1
			JF233126	DECAL TANK UPPER RH WHITE-BLACK	1
19	36JL0110	KIT DCL SIDE COVR WHT-BLK BS IV	JL233263	DECAL SIDE COVER LH WHITE-GRAY	1
			JL233264	DECAL SIDE COVER RH WHITE-GRAY	1
20	36JF0122	KIT DCL SEAT COWL WHT-BLCK Ns160	JF233129	DECAL COWL SEAT LH WHITE-BLACK	1
			JF233130	DECAL COWL SEAT RH WHITE-BLACK	1
			JL233269	DECAL WHEEL I WHITE-GRAY	1
			JL233270	DECAL WHEEL II WHITE-GRAY	1
21	36JF0123	KIT DCL FENDER BLUE-BLK NS160	JF233087	DECAL FENDER LH BLUE - BLACK	1
			JF233090	DECAL FENDER RH BLUE - BLACK	1
22	36JF0124	KIT DCL FAIRING BLUE-BLK NS160	JF233039	DECAL FAIRING LH BLUE - BLACK	1
			JF233042	DECAL FAIRING RH BLUE - BLACK	1
23	36JF0125	KIT DCL TANK CVR BLUE-BLK Ns160	JF233045	DECAL TANK UPPER LH BLUE - BLACK	1
			JF233048	DECAL TANK UPPER RH BLUE - BLACK	1
24	36JF0126	KIT DCL SIDE CVR BLUE-BLK NS160	JF233069	DECAL SIDE COVER LH BLUE - BLACK	1
			JF233072	DECAL SIDE COVER RH BLUE - BLACK	1
25	36JF0127	KIT DCL SEAT COWL BLUE-BLK Ns160	JF233075	DECAL SEAT COWL UPPER -LH BLUE-BLACK	1
			JF233078	DECAL SEAT COWL UPPER -RH BLUE-BLACK	1
			JL233281	DECAL WHEEL I BLUE-GREY	1
			JL233282	DECAL WHEEL II BLUE-GREY	1
26	36JF0128	KIT TANK CVR DCL NS160	JF233139	DECAL COVER TANK LH-160	1
			JF233140	DECAL COVER TANK RH-160	1
			JL233316	DECAL TANK 3D PULSAR-GREY	1
			JL233002	B LOGO DECAL FRONT	1

Sr No	Kit Part No.	Kit Description	Consisting of Following Parts		
			Part No.	Description	Qty/Kit
			JE541267	LABEL CLUTCH COVER K11	1
			JL541223	DECAL B-BAJAJ	1
			JF233124	DECAL SHROUD-OIL COOLED	1
			52JF0418	K11 UG SHROUD COVER LH + DCAL	1
			52JF0426	K11 UG SHROUD COVER LH + DCAL	1
27	36JF0146	Kit Dcl Fender Gray Black	JF233160	DECAL FENDER FRONT RH GREY-BLACK	1
			JF233159	DECAL FENDER FRONT LH GREY-BLACK	1
28	36JF0147	Kit Dcl Fairing Gray Black	JF233151	DECAL FAIRING RH GREY-BLACK	1
			JF233150	DECAL FAIRING LH GREY-BLACK	1
29	36JF0149	Kit Dcl Tank Cvr Gray Black	JF233153	DECAL TANK UPPER RH GREY-BLACK	1
			JF233152	DECAL TANK UPPER LH GREY-BLACK	1
30	36JF0150	Kit Dcl Seat Cowl Gray Black	JF233158	DECAL COWL SEAT RH GREY-BLACK	1
			JF233157	DECAL COWL SEAT LH GREY-BLACK	1

Kit List

pulsar NS160 EURO III / IV

Sr No	Kit Part No.	Kit Description	Consisting of Following Parts		
			Part No.	Description	Qty/Kit

Amendment Sheet

pulsar NS160 EURO III / IV

Page no.	Fig. no.	Old part no.	New part no.	Description	Updation date	Remarks
32	6	JE571236	JE571239	Clamp -oil Cooler	05.07.17	ALTERNATE
52	1	52JF0215	JF113418	Engine Stay Lh	05.07.17	ALTERNATE
52	2	52JF0216	JF113419	Engine Stay Rh	05.07.17	ALTERNATE
68	7	JD131018	JF131018	Assly Collar FR Wheel	05.07.17	ALTERNATE
82	24	DJ181005	DG181005	Bearing Cone	05.07.17	ALTERNATE
108	3	JD402012	30191048	Band	05.07.17	ALTERNATE
108	3a	JD402017	30201064	Band	05.07.17	ALTERNATE
114	12	KADA0640	39106204	Bolt Flanged	05.07.17	ALTERNATE
120	1	36JL0100	36JL0114	Kit Dcl Fairing Red-BL	05.07.17	ALTERNATE
120	1	36JL0102	36JL0118	Kit Dcl Fairing Wh-BL	05.07.17	ALTERNATE
120	3	36JL0137	JL233319	Dcl Side Cover LH Red-black	07.07.17	ALTERNATE
120	3	----------	JL233250	Dcl Side Cover RH Red-black	07.07.17	ALTERNATE
120	3	36JL0136	JL233321	Dcl Side Cover LH White-gray	07.07.17	ALTERNATE
120	3	----------	JL233264	Dcl Side Cover RH White-gray	07.07.17	ALTERNATE
120	3	36JF0129	JF233133	Dcl Side Cover LH Blue - Black	07.07.17	ALTERNATE
120	3	----------	JF233072	Dcl Side Cover RH Blue - Black	07.07.17	ALTERNATE
116	8	52JL0996	52JL1055	SIDE COVER RH SATIN BLK + RE	07.07.17	ALTERNATE
116	8	52JL0998	52JL1063	SIDE COVER RH SATIN BLK + WH	07.07.17	ALTERNATE
116	8	52JF0242	52JF0570	SIDE COVER RH SATIN BLK + SAFE	07.07.17	ALTERNATE
30	1	JE541273	56JE1V3V	Clutch Cover	04.08.17	ALTERNATE
70	12	JL131924	36JL0141	Hose Master Cyl to ABS Unit	04.09.17	ALTERNATE
74	3	JL131925	36JL0142	Hose Caliper to ABS	04.09.17	ALTERNATE
74	13	KACB0830	KACA0830	Bolt Socket	04.09.17	ALTERNATE
68	6	JF131811	JD131811	Special Bolt M8	04.09.17	UPDATION
30	1	56JE1V3V	36JF0135	Assly Clutch Cover	06.09.17	ALTERNATE
120	4	JF233133	JF233167	DECAL COVER SIDE LH BLUE-BLACK	13.10.17	ALTERNATE
120	3	JF233072	JF233168	DECAL COVER SIDE RH BLUE-BLACK	13.10.17	ALTERNATE
120	3	JL233250	JL233320	DECAL COVER SIDE RH RED-GREY	13.10.17	ALTERNATE
120	3	JL233264	JL233322	DECAL COVER SIDE RH WHITE-GREY	13.10.17	ALTERNATE
48	2	JE591012	JE591043	Pipe A Assembly	06.11.17	Correction
48	15	—	JG511010	O2 Sensor	06.11.17	Addition

Amendment Sheet

pulsar NS160 EURO III / IV

Page no.	Fig. no.	Old part no.	New part no.	Description	Updation date	Remarks
42	9	–	DT351803	Sensor Throttle Position	09.11.17	Remove
30	1	36JF0135	36JE0029	Kit Clutch Cover Slate Grey	12.12.17	Updation
30	7	JE541234	56JE1X3V	Cap Oil Filter (JE541234) “Slate Grey”	12.12.17	Updation
108	7	JF351412	JF351404	EPM44 MTB Series For Prodn	15.12.17	Updation
120	10	—	JL233185	3D Decal Tank (pearl Metallic White)	18.12.17	Addition
36	5	36JE0005	36JZ0121	Kit Friction Plate	25.12.17	Updation
36	15	DP101111	DT551408	Plate Clutch	25.12.17	Alternate
86	1	52JF0553	JL171842	Tank Assly Non EVAP	25.12.17	Alternate
72	6	---------	36JF0016	Minor With Grease	8.3.18	Addition
72	7	---------	36JF0015	Major With Grease	8.3.18	Addition
72	8	---------	36JF0017	Mini With Grease	8.3.18	Addition
8	1	JE511243	JE511251	Assembly Camshaft	8.3.18	Alternate
70	14	------	36DT0034	Kit M Cylinder Major	29.3.18	Addition
70	15	--------	36JF0081	Kit Clamp Kit Mast Cyl	29.3.18	Addition
70	16	----------	36JF0082	Pushrod Assembly Kit	29.3.18	Addition
90	21	----------	JF171001	Cover Assly Tank Middle	03.04.18	Addition
62	10	JI401402	JF401405	Switch Side Stand	15.05.18	Updation
74	1	JF131820	JF131836	ABS Unit	22.05.18	Updation
74	1	JF131836	JF131839	Unit Abs Wet -k16b1	12.06.18	Updation
74	2	JL131924	36JL0141	Brake Hose Assembly Kit Front	12.06.18	Updation
96	3A	----------	DH201080	Sensor Speed-cable	31.10.18	Added
52	2	36JL0013	JL191017	Seat Damper Front	23.05.19	Updation
60	12	KADE0610	KADF0610	Bolt Flanged	23.05.19	Alternate
62	17	39195804	KAED0618	Bolt Flange-kae St-d Dia-06 L-18	23.05.19	Alternate
84	23	----------	DK201164	Sensor Speed Wheel	22.07.19	Added
84	24	----------	JU131802	Sensor Disc Rear	22.07.19	Added
84	25	----------	JG131220	Screw Pan Cross-m6x1xl12xprecoat	22.07.19	Added
122	17	KACB0616	KACH0616	Bolt Socket-m6x1xl16xcl 10.9xblk	30.07.19	Alternate Updation
40	10	39220804	LAD00018	Bolt Flanged M5x0.8x10	13.08.19	Alternate Updation
118	14	----------	JF113844	Bracket Flasher Interlock Relay	14.11.19	Added
18	26	----------	JH551209	Sprocket Output 15T	17.07.20	Added

Part Number	Figure No.	Page No.
14151033	14	38
22150241	14	30
30101061	23	18
30101142	18	32
30101195	3	36
30151033	3	68
30151033	4	70
30151069	16	84
30151082	17	86
30181025	4	92
30181026	5	92
30181029	17	92
30191038	23	88
30191048	3	118
30201064	3a	118
31101173	3	12
31201079	6	88
31201081	7	26
39019811	12	88
39024011	12	38
39032615	12	62
39042215	11	64
39045411	11	58
39045411	17	88
39055302	12	58
39059417	4	8
39069415	18	88
39071111	5	94
39072211	14	84
39072211	7	102
39073817	3	30
39074501	20	100
39078111	11	68
39078912	16	88

Part Number	Figure No.	Page No.
39080708	19	88
39098717	4	16
39098717	5	18
39099206	7	20
39099311	6	30
39099906	9	24
39099906	11	26
39099906	2	28
39099906	23	32
39100006	3	10
39104119	10	32
39105315	15	58
39106204	12	124
39122515	22	60
39122515	21	88
39122515	9A	124
39128321	7	4
39150711	8	120
39153721	22	88
39154011	3	90
39155304	9	38
39156121	22	32
39166005	2	4
39167121	6A	32
39167204	5	34
39167204	25	84
39167304	13	8
39167304	5	32
39167304	2	40
39168904	5	64
39171519	3	26
39182812	12	108
39190701	15	116
39194304	8	62

Part Number	Figure No.	Page No.
39194304	13	70
39194304	5	102
39195604	3	54
39195604	9	120
39201719	1	6
39214124	13	112
39216611	20	18
39218919	3	26
39219019	6	26
39220011	7	12
39220011	11	38
39224120	13	86
39224220	16	86
39231204	11	50
39240817	8	30
39242001	11	62
39242704	10	90
39244311	16	32
39247504	7	88
39248415	13	116
39256220	11	24
39256220	4	26
39260801	10	4
39262921	6	4
39266921	12	8
39272204	8	60
39272315	7	54
59040038	4	32
59040038	4	36
59040048	3	88
59040048	18	116
59040050	14	4
59150003	12	68
59150014	10	12

Part Number	Figure No.	Page No.
59200036	3	24
59200036	2	26
59210023	16	26
59210024	18	16
01100905	11	22
36DH4172	2	74
36DH4173	1	74
36DH4174	2	78
36DH4175	3	78
36DH4176	5	78
36DH4177	4	78
36DH4178	6	78
36DH4179	7	78
36DH4180	8	78
36DK0020	6	92
36DT0034	14	72
36JC0003	13	88
36JE0029	1	32
36JF0005	10	8
36JF0006	3	84
36JF0007	11	30
36JF0015	7	76
36JF0016	6	76
36JF0017	8	76
36JF0025	9	6
36JF0031	14	92
36JF0042	2	10
36JF0044	14	72
36JF0045	14a	72
36JF0081	15	72
36JF0082	16	72
36JF0113	6	130
36JF0115	6	130
36JF0117	1	10

Part Number	Figure No.	Page No.
36JF0119	2	130
36JF0120	5	130
36JF0121	2	130
36JF0122	5	130
36JF0123	6	130
36JF0124	1	130
36JF0125	2	130
36JF0127	5	130
36JF0128	9	132
36JF0130	2	24
36JF0131	1	26
36JF0146	6	130
36JF0147	1	130
36JF0149	2	130
36JF0150	5	130
36JF0167	8	86
36JF0199	2	82
36JF0200	3	80
36JF0200	3	82
36JG0011	3	56
36JL0015	9	60
36JL0017	19	112
36JL0041	4	60
36JL0114	1	130
36JL0118	1	130
36JL0141	12a	72
36JL0141	2	80
36JU0015	1	120
36JZ0121	5	38
36JZ0132	6	40
52JA0029	6	24
52JE0074	1	2
52JE0182	1	36
52JE0231	1	2

Part Number	Figure No.	Page No.
52JF0021	1	22
52JF0089	10	22
52JF0228	1	126
52JF0229	1	126
52JF0230	1	126
52JF0411	4	126
52JF0412	9	128
52JF0418	12	128
52JF0419	4	126
52JF0420	9	128
52JF0426	13	128
52JF0427	4	126
52JF0428	9	128
52JF0434	2	126
52JF0435	3	126
52JF0455	5	126
52JF0456	6	126
52JF0457	5	126
52JF0458	6	126
52JF0459	5	126
52JF0460	6	126
52JF0568	7	128
52JF0570	8	128
52JF0590	9	128
52JF0592	5	126
52JF0593	6	126
52JF0594	4	126
52JF0597	1	126
52JF0603	2	126
52JF0604	3	126
52JF0681	7	128
52JF0682	8	128
52JL0072	17	64
52JL0750	1	96

Part Number	Figure No.	Page No.
52JL0918	2	126
52JL0919	3	126
52JL0936	2	126
52JL0937	3	126
52JL1024	14	60
52JL1035	2	60
52JL1053	7	128
52JL1055	8	128
52JL1061	7	128
52JL1063	8	128
52JZ0264	1	22
56JE1X3V	7	32
56JF181Y	17	60
56JF191Y	10	60
56JF3832	10	128
56JF384R	10	128
56JF385N	10	128
56JF385Y	10	128
56JF3932	11	128
56JF394R	11	128
56JF395N	11	128
56JF395Y	11	128
56JL023G	2	116
56JL3X1Y	15	60
56JL3Y1Y	1	60
56JL4J1Y	16	60
56JL4K1Y	7	60
56JL4L1Y	19	60
56JL4M1Y	11	60
AA101437	20	32
AN111015	8	42
AP101236	3	8
BA102004	13	24
BA102004	24	32

Part Number	Figure No.	Page No.
BF561219	4	22
CL201023	21	112
CS101128	11	8
DD101062	15	8
DD101097	12	30
DD111011	7	42
DD111012	5	42
DD111018	10	42
DE151012	4	68
DE191010	10	72
DE191010	10	80
DE191028	7	72
DE191029	6	72
DE191033	15	72
DF161102	12	64
DG101029	8	6
DG101339	2	88
DG121002	11	46
DG161124	2	64
DG171016	4	58
DG171018	5	58
DG171019	6	58
DG181005	24	92
DG181008	8	90
DG181008	22	92
DG191048	20	88
DH101048	7	8
DH101048	9	12
DH101048	5	14
DH101235	21	18
DH101380	10	26
DH101380	7	40
DH101392	16	8
DH101509	14	22

Part Number	Figure No.	Page No.
DH101607	5	50
DH101648	13	38
DH101784	8	26
DH111013	9	42
DH151029	15	88
DH161146	16	64
DH161158	9	102
DH181015	16	92
DH191006	10	88
DH191013	5	88
DH191037	20	112
DH191062	4	72
DH201079	2	68
DH201079	3	106
DH201080	3A	106
DJ101064	7	50
DJ151042	14	88
DJ151069	2	76
DJ151070	3	76
DJ151119	18	84
DJ161069	3	62
DJ161228	10	36
DJ161229	3	94
DJ161229	11	100
DJ161229	16	116
DJ181087	8	92
DJ181088	7	92
DJ191026	8	82
DJ191029	2	72
DJ191030	3	72
DJ191031	5	72
DJ201109	9	72
DJ201173	8	102
DJ221019	1	122

Part Number	Figure No.	Page No.
DK101237	12	34
DK101284	9	40
DK101340	11	4
DK101366	13	34
DK101386	8	8
DK151012	6	86
DK151013	9	86
DK151014	3	86
DK151015	10	86
DK151022	15	86
DK151026	2	66
DK151039	1	66
DK151040	5	66
DK151069	11	72
DK151069	11	80
DK151081	20	86
DK151082	19	86
DK181025	20	92
DK181028	21	92
DK201164	23	86
DK211007	3	52
DK221024	2	122
DM181010	11	92
DP161145	11	116
DS101117	4	30
DS101154	3	14
DS101215	11	32
DS101355	25	18
DS121126	10	46
DS141012	6	56
DS141012	9	94
DS141012	3	102
DS151057	4	84
DS151057	7	86

Part Number	Figure No.	Page No.
DS151073	6	84
DS151073	11	86
DS151094	24	84
DS161125	2	62
DS161287	6	52
DS181070	9	92
DS181072	10	92
DS201025	2	118
DS211004	5	56
DS221001	14	108
DT113014	18	60
DT113015	13	60
DT113848	7	58
DT113850	4	80
DT131854	29	84
DT131857	28	84
DT131875	16	62
DT131875	8	80
DT131875	6	82
DT171089	4	98
DT171814	6	98
DT171839	2	98
DT171847	12	48
DT181022	5	120
DT181316	9	118
DT181317	10	118
DT181433	15	62
DT401015	5	114
DT401016	4	114
DT402223	6	120
DT402404	8	70
DT402404	26	84
DT551408	15	38
DT581028	5	46

Part Number	Figure No.	Page No.
DT581062	3	46
DU101213	20	16
FD101078	3	28
FD211006	5	52
GL131827	9	82
GL621414	5	40
JA541005	5	26
JA541005	6	36
JA541010	8	14
JA541010	5	24
JA541012	7	24
JA541021	15	26
JA541211	14	32
JA541225	13	32
JA541233	2	36
JA551002	3	16
JA551002	4	18
JA551004	7	16
JA551004	9	18
JA551008	16	16
JA551009	17	16
JA551406	2	38
JA591040	14	50
JA621002	5	30
JA621006	2	30
JA621206	13	30
JB113007	12	82
JB131224	21	84
JB181223	4	56
JB181223	5	104
JB511018	5	4
JC151004	15	84
JC151006	19	84
JC151016	12	86

Part Number	Figure No.	Page No.
JD131210	11	84
JD131212	9	84
JD131811	10	68
JD131811	6	70
JD141003	23	84
JD141003	22	86
JD171059	9	96
JD191006	8	52
JD351206	11	42
JD401007	4	116
JD551400	10	38
JD561004	3	20
JD561006	2	20
JD561011	6	20
JD561204	7	22
JE351011	8	40
JE351013	12	40
JE351031	12	40
JE351040	8	40
JE351212	6	42
JE351250	3	42
JE351252	4	42
JE351400	9	4
JE351403	5	10
JE351600	1	40
JE501019	1	24
JE501074	1	24
JE511038	2	2
JE511047	1	4
JE511052	16	4
JE511053	3	2
JE511059	3	4
JE511060	10	6
JE511085	4	4

Part Number	Figure No.	Page No.
JE511208	2	6
JE511209	3	6
JE511212	4	6
JE511213	5	6
JE511221	7	6
JE511225	6	6
JE511233	9	8
JE511234	6	8
JE511241	5	8
JE511245	1	8
JE511251	1	8
JE521016	14	8
JE521030	4	10
JE531033	5	12
JE531040	1	12
JE531045	6	12
JE531052	1	12
JE531202	1	14
JE541028	12	24
JE541048	17	26
JE541051	19	26
JE541063	20	26
JE541082	1	26
JE541228	8	36
JE541240	7	36
JE541241	15	32
JE541242	21	32
JE541244	3	32
JE541249	19	32
JE541250	11	40
JE541267	6	32
JE541271	2	32
JE551001	1	16
JE551001	1	18

Parts Index

pulsar NS160 EURO III / IV

Part Number	Figure No.	Page No.
JE551200	6	16
JE551200	8	18
JE551201	5	16
JE551201	6	18
JE551202	2	16
JE551202	2	18
JE551203	5A	16
JE551203	7	18
JE551205	10	16
JE551206	12	16
JE551206	14	18
JE551208	11	16
JE551211	19	18
JE551212	17	18
JE551213	11	12
JE551214	4	14
JE551215	15	16
JE551215	18	18
JE551216	13	16
JE551216	16	18
JE551408	9	32
JE551413	6	38
JE551414	4	38
JE551415	7	38
JE551428	1	38
JE551430	3	38
JE561004	9	20
JE561005	5	20
JE561006	1	20
JE561200	3	22
JE571007	8	32
JE571009	1	28
JE571213	25	32
JE571215	1	34

Part Number	Figure No.	Page No.
JE571216	8	34
JE571219	7	34
JE571223	3	34
JE571224	11	34
JE571225	10	34
JE571227	4	34
JE571239	6	34
JE581011	8	46
JE581018	6	46
JE581056	1	46
JE581084	4	46
JE581093	8	46
JE581409	12	4
JE591043	2	50
JE591046	4	50
JE591048	1	50
JE611001	2	44
JE611203	1	44
JE611205	1	44
JE621002	1	30
JE621003	9	30
JE621004	15	30
JE621203	10	30
JE621403	14	40
JE621404	4	40
JE621405	9	26
JE621405	15	40
JE621407	3	40
JE621409	4a	40
JE621411	14	40
JF111183	1	56
JF113007	5	60
JF113202	1	64
JF113412	6	54

Part Number	Figure No.	Page No.
JF113418	1	54
JF113419	2	54
JF113809	16	100
JF113822	7	94
JF113832	8	94
JF113842	13	42
JF113844	14	120
JF113854	4	82
JF121004	19	92
JF122005	3	58
JF122006	10	58
JF122072	3	58
JF131008	16	58
JF131008	1	68
JF131008	10	70
JF131010	1	66
JF131011	3	66
JF131011	7	68
JF131011	1	70
JF131016	8	68
JF131016	2	70
JF131018	6	68
JF131018	7	70
JF131022	14	70
JF131206	4	66
JF131206	12	84
JF131209	22	84
JF131210	16	58
JF131222	5	66
JF131233	4	66
JF131236	1	86
JF131600	20	84
JF131800	9	68
JF131802	12	72

Part Number	Figure No.	Page No.
JF131806	1	76
JF131807	8	72
JF131816	8a	72
JF131833	5	70
JF131834	1	76
JF131839	1	80
JF131843	20a	84
JF131852	13a	62
JF131855	13	62
JF131871	10	82
JF131878	9	78
JF131902	1	82
JF151018	1	92
JF151019	18	92
JF151025	2	90
JF151027	6	90
JF151031	2	92
JF151032	3	92
JF151033	13	92
JF151034	15	92
JF151036	12	92
JF161001	1	88
JF161008	11	90
JF161009	1	88
JF161201	2	106
JF161202	1	106
JF161203	1	106
JF171001	21	100
JF171004	1	100
JF171009	2	100
JF171051	5	98
JF171607	16	48
JF171608	7	96
JF171807	18	48

Part Number	Figure No.	Page No.
JF181005	7	108
JF181210	17	112
JF181211	1	108
JF181272	4	118
JF181282	11	118
JF181287	1	94
JF181289	1	110
JF181290	2	110
JF181331	1	110
JF181332	2	110
JF181340	1	108
JF181402	4	62
JF181403	1	62
JF181409	6	108
JF181464	6	108
JF181466	7	108
JF181467	8	108
JF181468	9	108
JF231214	1	124
JF231215	2	124
JF232606	17	90
JF232612	17	90
JF232612	7	96
JF233124	12	132
JF233167	3	130
JF233168	4	130
JF233171	3	130
JF233172	4	130
JF351404	7	118
JF401017	9	112
JF401405	10	64
JF401600	7	120
JF402237	1	118
JF402238	1	118

Part Number	Figure No.	Page No.
JF402247	1	118
JF402411	1	104
JF402412	1	104
JF511052	5	4
JF561204	9	22
JF561205	12	22
JG131219	8	84
JG131219	14	86
JG131220	30	84
JG131220	25	86
JG151022	16	90
JG161008	12	90
JG161010	1	72
JG171086	10	48
JG171601	8	48
JG181235	3	112
JG181236	2	112
JG181238	2	104
JG191008	4	52
JG232601	9	52
JG232606	10	52
JG351805	8	44
JG401036	14	116
JG511010	15	50
JG531220	2	8
JG531220	2	14
JG541074	11	36
JG551428	3A	38
JG571024	13	26
JG581056	7	46
JG581407	13	4
JG581424	3	44
JG581424	7	44
JG581442	12	46

Part Number	Figure No.	Page No.
JG591038	3	50
JG591039	6	50
JG611006	4	44
JG611206	6	44
JH131864	18a	84
JH541210	17	32
JH551001	10	18
JH551002	22	18
JH551202	24	18
JH551203	15	18
JH551204	12	18
JH551205	3	18
JH551205	11	18
JH551206	13	18
JH551209	26	18
JL111054	4	54
JL111054	16	124
JL111103	2	56
JL113012	3	60
JL113033	20	60
JL113033	8	88
JL113038	21	60
JL113201	9	64
JL113207	7	64
JL113209	15	64
JL113210	3	64
JL113212	8	64
JL113223	18	64
JL113803	6	116
JL113809	7	56
JL113810	7	116
JL113811	8	116
JL113812	9	116
JL113818	19	64

Part Number	Figure No.	Page No.
JL113822	7	116
JL113825	4	120
JL113828	10	78
JL113830	3	48
JL113836	16	42
JL113839	9	80
JL122006	1	58
JL122008	13	58
JL122026	14	58
JL131810	11	88
JL131841	9	74
JL131878	10	74
JL131930	18	86
JL151021	1	90
JL151028	5	90
JL151034	7	90
JL151035	9	90
JL151038	2a	90
JL161003	14	90
JL161005	4	88
JL161006	9	88
JL161008	15	90
JL161010	4	88
JL171018	13	96
JL171019	15	96
JL171020	16	96
JL171024	5	100
JL171024	18	100
JL171028	2	96
JL171029	3	96
JL171030	4	96
JL171031	5	96
JL171038	6	96
JL171040	19	100

Parts Index

pulsar NS160 EURO III / IV

Part Number	Figure No.	Page No.
JL171049	10	96
JL171057	3	100
JL171061	9	100
JL171062	8	100
JL171063	12	96
JL171070	6	100
JL171071	4	100
JL171073	11	96
JL171078	15	100
JL171836	15	48
JL171837	13	48
JL171839	6	48
JL171842	1	96
JL171854	9	48
JL171856	1	98
JL181008	1	112
JL181203	6	112
JL181209	14	62
JL181214	4	102
JL181236	14	112
JL181237	16	112
JL181241	4	104
JL181247	5	112
JL181249	15	112
JL181256	6	94
JL181257	23	112
JL181263	26	112
JL181283	22	112
JL181288	1	102
JL181297	2	108
JL181407	8	108
JL181408	9	108
JL181411	5	62
JL191001	1	52

Part Number	Figure No.	Page No.
JL191004	7	52
JL191017	2	52
JL231202	6	124
JL231204	8	124
JL231209	5	108
JL231209	7A	124
JL231404	3	124
JL231405	4	124
JL231600	21	90
JL231601	20	90
JL232604	12	52
JL232805	17	116
JL232808	10	116
JL232813	6	116
JL233002	11	132
JL233185	10	132
JL233255	7	132
JL233256	8	132
JL233269	7	132
JL233270	8	132
JL233281	7	132
JL233282	8	132
JL233316	10	132
JL233316	10	132
JL233319	3	130
JL233320	4	130
JL233321	3	130
JL233322	4	130
JL401002	1	116
JL401003	5	114
JL401004	4	114
JL401005	2	114
JL401006	1	114
JL401400	18	90

Part Number	Figure No.	Page No.
JL401405	19	90
JL401406	6	88
JL402003	1	42
JL402219	13	120
JL403000	12	120
JL403200	11	120
JL403600	14	64
JL541223	5	36
JL541227	12	32
JL561409	13	22
JL581055	9	46
JL591156	9	50
JL591157	8	50
JL591165	10	50
JL601216	10	94
JN131203	7	84
JN131812	13	84
JN351604	10	120
JU131801	9	70
JU131802	24	86
JU231205	13	124
JU401802	3	120
JU401803	2	120
JU581006	15	4
JV541007	18	26
JV541208	2	32
JV551000	19	16
JW131807	5	76
JW131810	4	76
JW561206	2	22
JY113842	14	48
JY113864	17	118
JY113872	12	118
JY113873	13	118

Part Number	Figure No.	Page No.
JY113874	16	118
JY113877	15	118
JY151011	23	92
JY171007	14	118
JY171069	5	48
JY171070	11	48
JY171077	1	48
JY171090	7	48
JY171825	17	48
JY181255	3	110
JY401404	13	90
JY402235	7	98
JY403604	14	42
JY541039	8	20
JY611003	5	44
JZ113061	23	60
JZ122008	8	58
JZ122012	9	58
JZ171055	2	48
JZ551008	8	16
JZ551205	14	16
JZ551210	9	16
JZ551412	8	38
JZ561002	4	20
JZ621000	7	30
KAAA0620	7	82
KACA0616	6	62
KACA0820	6	60
KACA0830	13	80
KACA0850	9	124
KACB0622	4	108
KACB0622	7	124
KACD0516	8	96
KACH0616	17	124

Part Number	Figure No.	Page No.
KACH0835	18	112
KADA0510	13	50
KADA0512	14	100
KADA0610	9	34
KADA0612	4	48
KADA0612	5	110
KADA0614	5	80
KADA0614	17	100
KADB0516	13	64
KADB0516	10	100
KADD0610	12	116
KADD0614	11	74
KADD0630	12	50
KADD0830	3	88
KADE0614	27	84
KADE0614	10	112
KADF0610	12	60
KADF0614	2	34
KADF0820	7	62
KADF0820	14	96
KADF0875	7	110
KADT0612	8	74
KAEA0622	12	80
KAEA0622	5	118
KAED0608	7	80
KAED0608	5	82
KAED0612	6	80
KAED0618	17	62
KAED0625	6	118
KAED0630	2	42
KAEF0630	21a	84
KAEQ0630	2	46
KBBA0514	3	116
KBBF0408	8	118

Part Number	Figure No.	Page No.
KBRC3513	12	58
KBUA0514	2	94
KBUA0516	12	112
KBUA0612	2	102
KBUA0614	6	110
KBUA0616	27	112
KBUA0620	4	110
KBUB0410	10	108
KBUB0516	13	100
KBUF0410	10	108
KCAA0504	3	104
KCGA0606	4	94
KCGA0606	18	118
KCGD0606	5	116
KCGD0808	5	54
KCGD0808	10	124
KCGD1010	3	114
KCHA0608	15	42
KCJD1212	11	52
KDAA0510	9	62
KDAA0611	11	112
KDAA1018	15	124
KDBA0512	7	112
KJAC1824	6	4
KPBB6202	10	84
KPBB6301	5	68
KPBB6301	3	70
KPBB6302	17	84
KPBC6004	5	84
KPBF6305	2	12
LAC00008	12	42
LAC00019	2	58
LAC00020	4	90
LAC00022	12	100

Part Number	Figure No.	Page No.
LAC00031	11	124
LAC00035	10	102
LAC00035	5	124
LAC00036	13	108
LAC00037	11	108
LAC00054	6	104
LAC00054	3	108
LAC00063	7	100
LAC00069	21	16
LAC00128	13	108
LAD00018	10	40
LAD00037	13	72
LAD00040	7	88
LAD00077	7	74
LAD00104	6	14
LAD00131	8	22
LAD00134	4	64
LAD00135	6	64
LAD00154	3	98
LAE00010	13	40
LAE00015	7	14
LAE00015	4	24
LAE00021	11	82
LAE00024	12	26
LAE00025	8	24
LBC00002	8	4
LBR00002	8	112
LBS00002	4	112
LBU00039	6	110
LBU00077	4	110
LCA00008	19	116
LCB00005	1	84
LCB00005	4	86
LCD00001	8	12

Part Number	Figure No.	Page No.
LCJ00002	18	58
LCJ00002	12	70
LCJ00002	21	86
LDA00025	12	12
LDB00007	7	104
LDB00023	10	62
LDB00023	6	102
LDB00029	17	58
LDB00029	11	70
LDB00029	2	86
LDB00044	5	22
LDC00001	14	124
LFB00001	4	12
LJA00004	14	26
PA181292	25	112
PA181293	24	112
PA561209	6	22
PF131220	2	84
PF131220	5	86
PF541018	10	24
YJF22001	6	74
YJF22002	5	74
YJF22004	4	74
YJF22006	3	74
YJF22009	1	78

Parts Index

pulsar NS160 EURO III / IV

Part Number	Figure No.	Page No.

Part Number	Figure No.	Page No.